City of Tarpon Springs, Florida

Board of Commissioners
324 East Pine Street
Tarpon Spring, Florida 34689
(727) 938-3711
http://www.ctsfl.us/agenda.htm

REGULAR SESSION AGENDA
TUESDAY, DECEMBER 9, 2025
6:30 PM - CITY HALL AUDITORIUM

CALL TO ORDER

ROLL CALL

REFLECTION: Reverend Milton Smith, First Responder Chaplain

PLEDGE OF ALLEGIANCE

SPECIAL PRESENTATION

1. 2025 Annual Point-in-Time Count & HUD CoC Funding Shifts
   Presenters: Cheri Holzbacher CEO, Homeless Leadership Alliance of Pinellas (HLA), Kathleen Beckman Chair, Pinellas Continuum of Care (CoC) Board

PUBLIC COMMENTS

CONSENT AGENDA

2. Attorney Fee: Johnson Jackson PLLC Invoice(s) 15910, 15911 **(Charles Rudd City Manager)**
3. Special Events:
   a. St. Nicholas Greek Orthodox Cathedral Epiphany Litany Procession & Glendi Celebration **(Chris Cotta Public Works Director)**
   b. 1st Friday in Tarpon Springs 2026 **(Chris Cotta Public Works Director)**
   c. 2nd Saturday Market Tarpon Springs 2026 **(Chris Cotta Public Works Director)**
   d. 2026 Tarpon Springs Sponge Docks Craft Festival **(Chris Cotta Public Works Director)**
   e. 3rd Annual Fenders for 1st Responders Car Show **(Chris Cotta Public Works Director)**
4. Approval of Election Contract - March 10, 2026 Municipal Election **(Irene Jacobs City Clerk)**
5. Approval of Florida Department of Emergency Management (FDEM) Subrecipient Agreement H1255, Project Number 4734-077-R, City of Tarpon Springs, Sponge Docks, Flooding Risk Reduction, Phase 1 **(Bob Robertson Project Administration Director, P.J. Harbert Grant Project Specialist)**
6. Approval of Florida Department of Environmental Protection (FDEP) Standard Grant Agreement 26SRP16, City of Tarpon Springs Wastewater Treatment Electrical Resiliency Project **(Tom Kiger Public Services Director, Robert Marcincuk Wastewater Division Manager, P.J. Harbert Grant Project Specialist)**
7. Renew File No. 220001-Q-JL, Maintenance of Public Restrooms at the Sponge Exchange **(Janina Lewis Procurement Services Director)**
8. Award File No. 260065-C-AS, General Electrical Services **(Tom Kiger Public Services Director, Ray Page Utilities Superintendent, Bob Marcincuk Wastewater Division Manager, Darryl Vaci Water Division Manager, Rodney Doorlag Utilities Maintenance Supervisor, Janina Lewis Procurement Services Director)**

9. Award File No. 260060-C-PH, Goodyear Tires and Services **(Chris Cotta Public Works Director, Jake Schaff Fleet Manager, Janina Lewis Procurement Services Director)**
10. Award Renewal of File No. 220131-C-JL, Automotive Parts and Supplies **(Chris Cotta Public Works Director, Jake Schaff Fleet Manager, Janina Lewis Procurement Services Director)**
11. Approval of Florida Department of Transportation and Institute of Police Technology and Management contract/subgrant agreement M5OT-2026-00201/G3I85, Tarpon Springs Drug Recognition Expert Callout **(Jeff Young Police Chief, P.J. Harbert Grant Project Specialist)**
12. Approval of Interlocal Agreement between Pinellas County and its National Pollutant Discharge Elimination System (NPDES) MS4 co-permittees for the continuation of our Surface Water Quality and Biological Monitoring Program **(Chris Cotta Public Works Director)**

BUSINESS ITEMS

ORDINANCES AND RESOLUTIONS

13. **Ordinance 2025-07; (1st Reading)(Quasi-Judicial)** Amending the Official Zoning Atlas for property located at 310, 320 & 340 Anclote Road **f**rom IPD (Industrial Planned Development) to IR (Industrial Restricted); (Application 25.28)**(Renea Vincent, Planning and Zoning Director)** **APPLICATION WITHDRAWN BY THE APPLICANT**
14. **Resolution 2025-62**; **(Quasi-Judicial)** Conditional Use to allow for a restaurant/tavern in the T4b transect of the Special Area Plan on property located at 325 E Lemon Street; (Application #25-69)**(Renea Vincent, Planning & Zoning Director)**
15. **Resolution 2025-65; (Quasi-Judicial)** Site Plan Approval for construction of a 13,057 square foot medical and general office building on property located at 1098 South Pinellas Avenue (Application 23.154)**(Renea Vincent, Planning and Zoning Director)**
16. **Ordinance 2025-18**; **(1st Reading)(Quasi-Judicial)** Amending the Official Zoning Atlas for property located at 475 N Highland Avenue from A (Agricultural) and RPD (Residential Planned Development) to A (Agricultural) (Application 25-79)**(Renea Vincent, Planning and Zoning Director)**
17. **Resolution 2025-66;** Calling for the Municipal General Election to be held on March 10, 2026, and Ballot Language **(Irene Jacobs City Clerk)**
18. **Resolution 2025-68;** Re-establishing the Marine Commerce Committee **(Charles Rudd City Manager)**
19. **Ordinance 2025-19; (2nd Reading)** Human Resources Background Checks **(Tabatha Adkins Human Resources Director)** **ADDENDUM 1**

BOARD AND STAFF COMMENTS

ADJOURNMENT

2025 Point-in Time Count & HUD CoC Funding Shifts

Presenters:
Cheri Holzbacher
CEO, Homeless Leadership Alliance of Pinellas (HLA)

Kathleen Beckman
Chair, Pinellas Continuum of Care (CoC) Board

December 2025

Who We Are: The Pinellas CoC & HLA

Pinellas Continuum of Care (CoC)

- Countywide network of providers, funders, municipalities, partners, and community members working together to reduce homelessness.
- Establishes local priorities and policies.
- The City of St. Petersburg is a member of the CoC and serves in

Homeless Leadership Alliance of Pinellas (HLA)

- Serves as the Lead Agency, Collaborative Applicant, and HMIS Lead for the CoC.
- Submits the annual HUD CoC NOFO application on behalf of the CoC.
- Coordinates PIT Count, system planning, and supports providers through the federal funding process.

2025 Point-in-Time (PIT) Count & Report

Annual snapshot of homelessness

Pinellas' PIT Report includes sheltered, unsheltered, jail, and school data

Informs planning, funding, and policy decisions

Overall Findings



Sheltered Homelessness*

1,325 People





Unsheltered Homelessness*

538 People





Total*

N=1,863 people



Pinellas County Jail

125 People



Pinellas County Schools

3,623 Students (4%)

113 Unsheltered

(Cumulative count Aug 10-Jan 27)

*HUD reporting standards for literal homelessness

Lowest Count Recorded in Pinellas

12% overall decrease from 2024

- **29%** Unsheltered – **25% decrease**
- **71%** Sheltered – **5% decrease**
  - 122 fewer volunteers this year compared to 2024
  - HB 1365/Anti-camping legislation

Consistently trending down since 2016

- Increases in funding (significant increase in prevention and diversion)
- Hurricanes, displacement, FEMA TSA vouchers, COVID

Unsheltered by Municipality

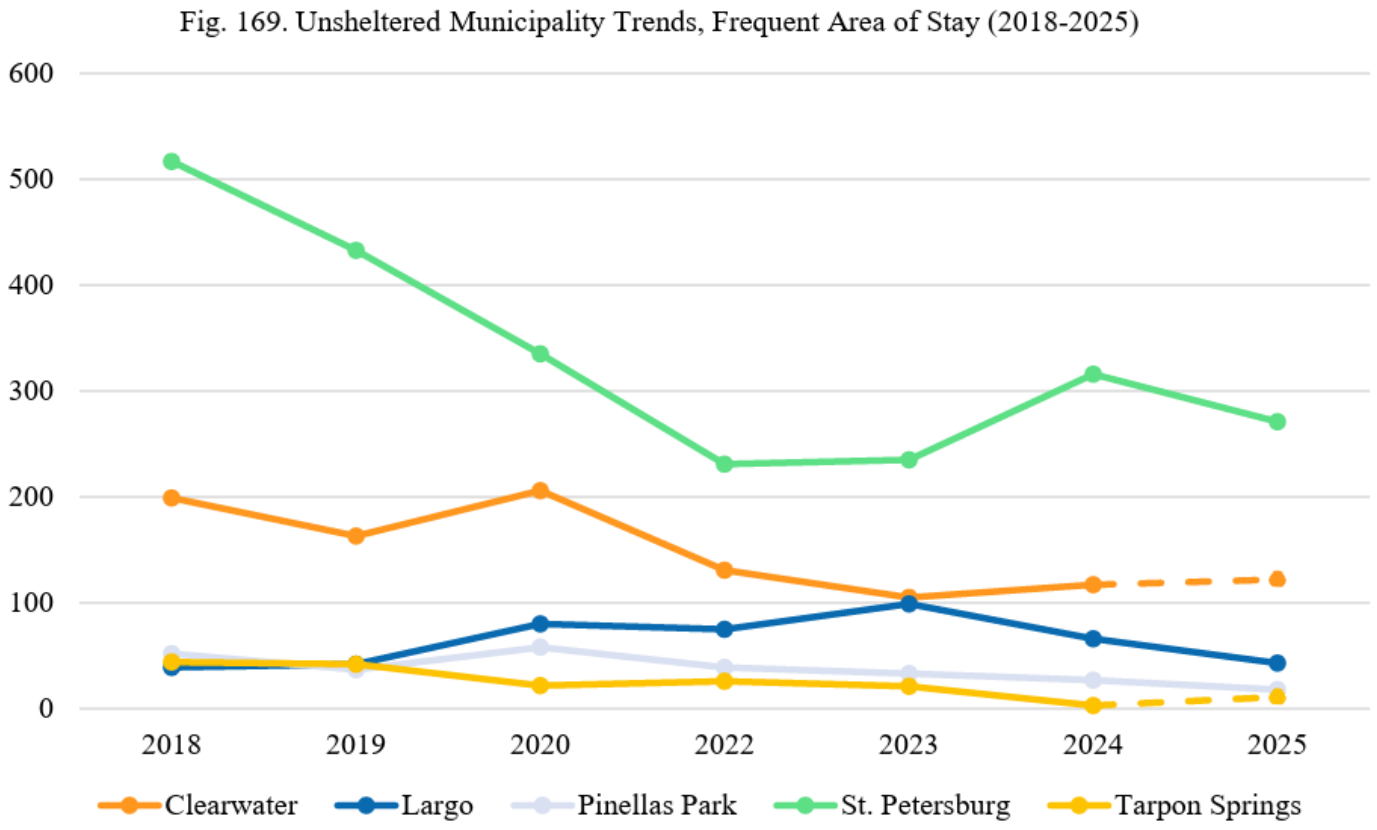

Who Is Affected

- Increase in older adults (23% rise in unsheltered 65+)
- 253 Veterans (increased 8% sheltered and 10% unsheltered)
- 189 Survivors of domestic violence
- Black and African American individuals make up 38% of the Pinellas homeless population and 11% of the Pinellas population
  - 76% of sheltered families
  - 41% of homeless students reported by Pinellas County Schools
- 494 people experienced chronic homelessness
- Mostly male (76% unsheltered; 62% sheltered)

Primary Causes

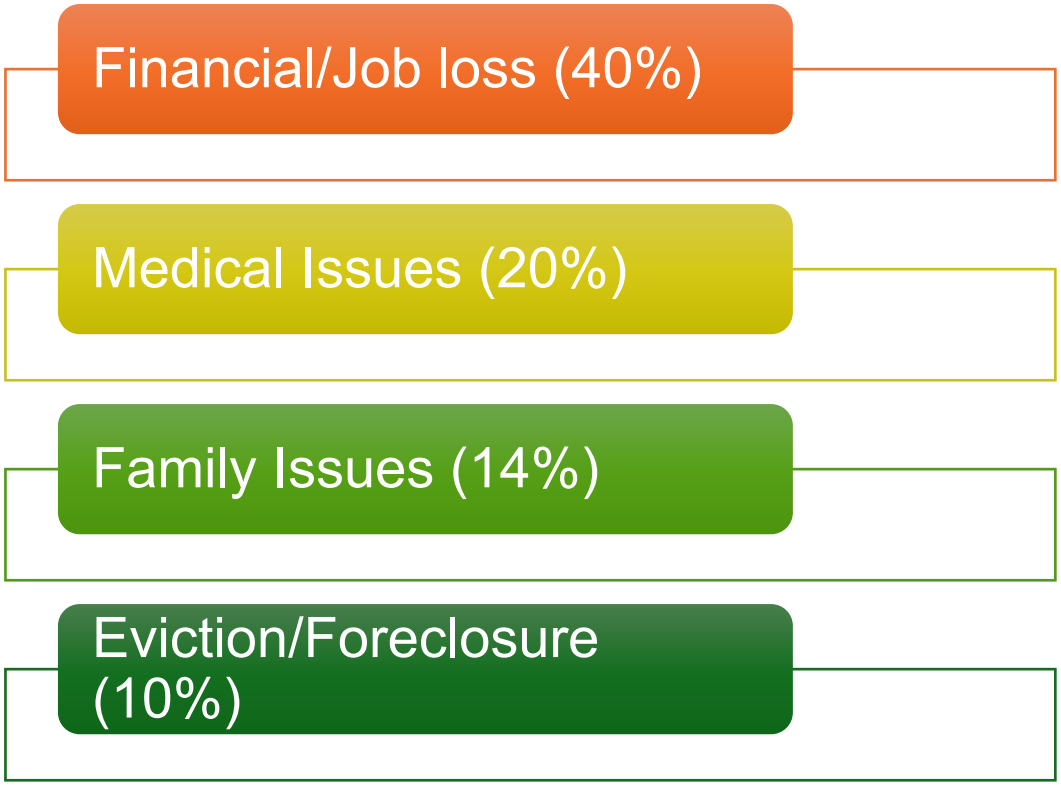

Housing Market Pressures

- Fewer than 26 affordable housing units per 100 extremely low-income renters (NLIHC, The Gap Report).
- 46% of households in Pinellas County live below the **A**sset-**L**imited, **I**ncome **C**onstrained, **E**mployed (ALICE) threshold – their earnings do not cover a basic survival budget.
- The basic survival budget in Pinellas has risen to $108,480 for a family of four with an infant and toddler (United Way Suncoast, ALICE Report).
- Rising rents place working households at-risk of homelessness.



What is Working?

- Strong street outreach.
- High performance in Rapid Rehousing (RRH).
- Permanent Supportive Housing (PSH) maintains stability for people with disabilities.
- More case managers at Safe Harbor.
- Strong system coordination with active partners across providers, funders, local governments, law enforcement, and people with lived experience

Federal Changes: FY25 HUD CoC Program NOFO

- HUD is shifting national priorities toward shorter-term response with treatment and service requirements over longer term assistance.
- Longer-term housing programs funded through the CoC NOFO now face stricter federal caps.
- Strong emphasis on public safety and coordination with law enforcement.

Opportunities for Partnership & Representation

- **Appoint a representative to your reserved seat on the Pinellas CoC Board.** This ensures Tarpon Springs has a voice in regional planning, funding priorities, and system decisions.
- **Connect with the CoC and HLA to stay informed on countywide trends and federal shifts.** Regional impacts may touch North County.

Thank You for Your Partnership

Please reach out anytime for questions or follow-up:

Cheri Holzbacher: CHolzbacher@HLAPinellas.org
Kathleen Beckman: Chair@PinellasCoC.org

Pinellas Continuum of Care
Ending Homelessness Together

2025 Pinellas Point in Time (PIT) Report Overview

1,863 People Experience Homelessness in Pinellas on a Single Night

1,325 or 71% Sheltered

538 or 29% Unsheltered

Gender

- **Male:** 816 or 62%
- **Female:** 507 or 38%
- **Other:** 2 or --%*

**Below 1%*

Age

- **65+:** 130 or 10%
- **55-64:** 297 or 22%
- **25-54:** 637 or 48%
- **18-24:** 54 or 4%
- **0-17:** 207 or 16%

Sheltered Homelessness by Type of Shelter

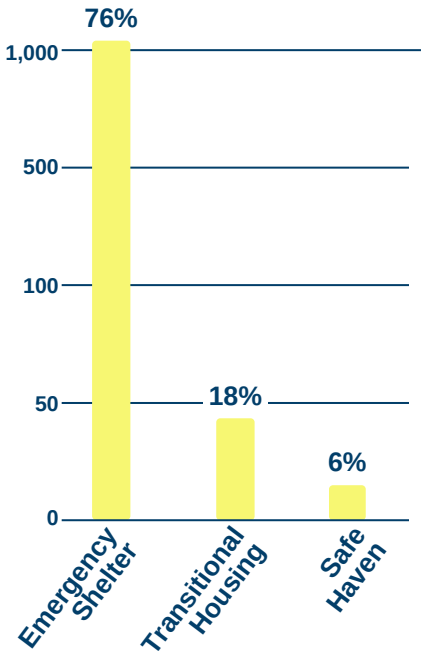

Decreasing Homelessness

12% drop in overall homelessness
5% drop in sheltered homelessness
25% drop in unsheltered homelessness

Race

Black and African American individuals make up **38%** the Pinellas homeless population but only **11%** of the Pinellas population

Survivors

189 people are survivors of domestic abuse

Veterans

253 people are Veterans of the U.S. Military

Chronically Homeless

494 people have experienced homelessness for 12+ consecutive months or over 4+ times within 3 years

Learn More and Join the Mission to End Homelessness:

www.PinellasCoC.org/pitdata

Gender

- **Male:** 407 or 76%
- **Female:** 126 or 23%
- **Other:** 5 or 1%

Age

- **65+:** 80 or 15%
- **55-64:** 154 or 29%
- **25-54:** 279 or 52%
- **18-24:** 13 or 2%
- **0-17:** 12 or 2%

Primary Cause of Unsheltered Homelessness

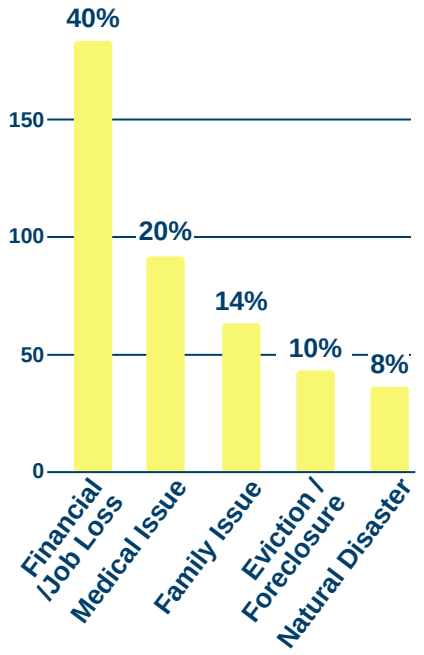

Please Note: Sheltered and Unsheltered data is based on the night of January 29, 2025. Data is self-reported; Participants may be included in multiple categories and / or have declined to provide information. Sources include the 2025 Pinellas Point in Time Report and the U.S. Census Bureau.

JOHNSON JACKSON PLLC
EMPLOYMENT DEFENSE COUNSEL | TRUSTED ADVICE. STRATEGIC DEFENSE.

INVOICE

Johnson Jackson PLLC
100 N Tampa St, Suite 1800
Tampa, FL 33602

Invoice #: 15910
Date: 12-01-2025
Due On: 12-31-2025

City of Tarpon Springs
324 E Pine Street Tarpon Springs
Tarpon Springs, FL 34689

Matter Number:0010.0001 City of Tarpon Springs/General

Services

Date	TK	Description	Hours	Rate	Total
11-10-25	EGJ	Review correspondence from Tabatha Adkins regarding FMLA leave	0.10	225.00	$22.50
11-11-25	EGJ	Phone conference with Tabatha Adkins regarding labor matter	0.30	225.00	$67.50
11-13-25	EGJ	Review and analyze correspondence and FMLA paperwork	0.20	225.00	$45.00
11-19-25	EGJ	Prepare correspondence to Tabatha Adkins regarding policies and proposed revisions	0.90	225.00	$202.50

Services Subtotal: $337.50

Expenses

11-30-25	11/30 - Westlaw Research	1.00	3.47	$3.47

Expenses Subtotal: $3.47

Subtotal:	$340.97
Total Invoice Due:	$340.97
Payment	$0.00

Please make all amounts payable to: Johnson Jackson PLLC
TAX ID: 82-0921194

JOHNSON JACKSON PLLC
EMPLOYMENT DEFENSE COUNSEL | TRUSTED ADVICE. STRATEGIC DEFENSE.

INVOICE

Johnson Jackson PLLC
100 N Tampa St, Suite 1800
Tampa, FL 33602

Invoice #: 15911
Date: 12-01-2025
Due On: 12-31-2025

City of Tarpon Springs
324 E Pine Street Tarpon Springs
Tarpon Springs, FL 34689

Matter Number:0010.0020 City of Tarpon [redacted]

Services

Date	TK	Description	Hours	Rate	Total
11-04-25	EGJ	Review correspondence regarding deposition and mediation	0.20	225.00	$45.00
11-04-25	EGJ	Phone conference with Tabatha Adkins; exchange email with Dean Ringers regarding mediation and deposition.	0.40	225.00	$90.00
11-06-25	EGJ	Attend case evaluation meeting	1.20	225.00	$270.00
11-13-25	EGJ	Review correspondence from Tabatha Adkins regarding COBRA	0.30	225.00	$67.50

Services Subtotal: $472.50

Subtotal:	$472.50
Total Invoice Due:	$472.50
Payment	$0.00

Please make all amounts payable to: Johnson Jackson PLLC
TAX ID: 82-0921194

Chris Cotta
Public Works Director

Public Works Department
Office of the Director

To: Mayor and Board of Commissioners

From: Chris Cotta, Public Works Director

Date: December 2, 2025

Subject: Special Event – St. Nicholas Greek Orthodox Cathedral
Epiphany Litany Procession & Glendi Celebration
January 6, 2026

Recommendation:

That the Mayor and Board of Commissioners approve the St. Nicholas Greek Orthodox Cathedral's special event application for Epiphany Procession & Glendi Celebration on January 6, 2026, and the temporary closure of Pinellas Ave, Orange St., Ring Ave., Tarpon Ave, the Spring Bayou to Craig Park.

Background:

This event has been approved by the Special Events Review Committee based on previous years' events.

The Police Department has approved the procession route, based on previous years' route. The Church's stage will be set up at the Spring Bayou Platform on January 5, 2026, and the City's Boat Ramp will be closed during the event.

All set-up and clean-up will be the event sponsors' responsibility.

Approval of this event authorizes the Sponsor/User the use of City property for said special event with the understanding that they must operate and carry out the needs and functions of the event within the confines and requirements established and approved by the Special Events Committee, the B.O.C. and the Sponsor's application on record.

City of Tarpon Springs
Application for Special Events

Event Information:

Date of Application: 9/22/2025

Name of Event: St. Nicholas Greek Orthodox Cathedral Epiphany Procession to Spring Bayou and Glendi Celebration at the St. Nicholas Community Center/Theofilos Hall

Date(s) of Event: January 6, 2026

Alternate Date(s): _____

Hours of Event: 09:00 AM to 6:00 PM

Set up/break down time needed: January 5 – January 7, 2026

Type/Purpose of Event: Epiphany Celebration/Fundraiser

Location of Event (include map for parade/procession routes with assembly and disband points):

348 N. Pinellas Avenue, St. Nicholas Community Center/Theofilos Hall

If Closure of City Parking is needed, please check street:

Mother Meres ☐ Tarpon Ave. ☐ Orange St. ☐ Court/Lemon ☐

Other: _____

Disposition of Proceeds: _____

Applicant Information:

Name of Organization: St. Nicholas Greek Orthodox Cathedral

Registered Nonprofit Org.: Yes ☒ No ☐ or City Department ☐

Organizations Address: 17 E. Tarpon Avenue, Tarpon Springs, FL 34689

Individual to Contact: Denise Letourneau, Cathedral Administrator

(Telephone #) 727-937-3540 (email) Denise@stnicholastarpon.org

Alternative Contact: _____

(Telephone #) _____ (email) _____

General Information:

Number of Vendors: None (Sponsor is required to keep a list of vendors and must be able to produce upon request.)

Location for Designated Vendor Parking (Please complete Vendor Designated Parking Form and attach to application):_____

Approximate Number of Attendees: 1000-3000 Entrance Fee: $_____

Location for Attendee Parking:_____

Will Private Security be Provided: Yes ☐ No ☒ Name of Private Company: Tarpon Springs Police Dept.

Will the Following be Provided: Traffic Control: Yes ☒ No ☐ Crowd Control: Yes ☒ No ☐

Will Music be Provided: Yes ☒ No ☐ Hours of Play: 1:00-6:00 PM Band: ☒ DJ: ☐ or Other:_____

Type & Location of Toilet Facilities:_____

Tent or Other Structure: Yes ☐ No ☒ Type of Structure:_____

How will Structure be Secured:_____

Solid Waste Collection/Disposal: Yes ☐ No ☒ Dumpster: ☐ Rolloff: ☒ Other: Comm. Center

If parade # of: Participants_____ Animals_____ Floats _____ Bands _____ Other _____

Amusement/Carnival Rides: Yes ☐ No ☐ Name of Company Providing Rides:_____

Types of Rides: _____

Is Diagram of Layout Attached: Yes ☐ No ☐

Will Food/Beverages be Served: Yes ☒ No ☐

Cooked on Site: ☒ Catered: ☐ Sold: ☒ Given Away: ☐

Will Alcoholic Beverages be Served: Yes ☒ No ☐

Type of Alcoholic Beverages: Beer and Wine

Event Sponsor is responsible to ensure that all food/alcohol vendors have all necessary licenses as required by the Department of Business and Professional Regulations, Division of Hotels & Restaurants and/or Division of Alcohol and Tobacco, Department of Health, Environmental Health Division, or any other applicable State Agency.

Equipment/Miscellaneous (please check if needed):

Barricades: ☑ How many: As needed

Cones: ☑ How many: As needed

Portable Stage: ☐ Location:_____

Electricity Needed: ☐ Where:_____

Public Restrooms: ☒ Hours of Opening/Closing: 9:00 AM – 5:00 PM

Street Banners: ☒ Location: Epiphany banners to be hung as every year

Electric Message Board: ☐ _____

Additional City Trash Cans: ☒ _____

Directional Parking Signs: ☐ Locations: _____

Other: _____

Is a check made payable to the City of Tarpon Springs for the Application Fee & Deposit Attached:

Yes ☒ No ☐ N/A ☐

If not, when will it be sent: _____

Is the Certificate of Insurance Attached: Yes ☒ No ☐ If not, when will it be sent:_____

I (we) agree that it is my (our) responsibility to clean up after the conclusion of the special event: Yes ☒ No ☐

I (we) have read and completed this application, and it is true and correct to the best of my (our) knowledge; I (we) have read the general instructions for this application and the City of Tarpon Springs Ordinance #88-25 and agree to conform with the provisions as set forth therein. I (we) understand that knowingly providing false information on the application shall automatically void the application and cancel the event.

Emmanuel Vestas, 2026 Epiphany Chairman 9/22/25

Signature of Applicant Date

TARPON SPRINGS
POLICE DEPARTMENT
"Building a Better Future Through Excellence in Policing"
Jeffrey P. Young
CHIEF OF POLICE

Tarpon Springs Police
Extra Duty Detail Application Rules

Thank you for inquiring about the availability of off-duty officers for security services or other related functions. In compliance with Tarpon Springs Police Department General Order #122, this application is required to engage the extra-duty services of police officers for public safety, health and welfare services in addition to those already provided to the public. It is understood that this is a non-binding agreement. The Police Department may cancel this request without advance notice or cause at any time. The Tarpon Springs Police Department will attempt to place officers during the requested dates and hours. Because of emergencies, inability to find an Officer to work this detail or other unforeseen circumstances, this request may not be filled when requested. The Tarpon Springs Police Department will not permit an Officer to work an assignment that is deemed as a conflict of interest.

The following represents the hourly rate associated with this service, beginning October 1, 2022

Fees

$50.00 (per hour) Regular	$60.00 per hour for requests received within 72 hours of the date of the event	$60.00(per hour) Premium

There is a three (3) hour minimum on all off-duty employment.

In accordance with the current collective bargaining agreement between the City of Tarpon Springs and the Pinellas County Police Benevolent Association Inc., the following holidays will be charged at a Premium rate:

Thanksgiving Day
Christmas Eve Day (December 24)
Christmas Day (December 25) New
Years Eve (December 31) New Years
Day (January 1)

Cancellations

Job cancellations must be made at least two (2) hours **prior** to the scheduled starting time of the detail (with exception of a natural disaster) and must be called in to the Patrol Supervisor at 727-938-2849.

The (3) hour minimum shall apply to cancellations not meeting this requirement. If the time worked is greater than half the assigned time, the officer will be paid for the full time of the assignment scheduled.

Anne Bellus

Applicant's signature of understanding

Payment
Invoices for services rendered for off-duty work will be sent to the vendor after the event has occurred, unless otherwise specified. All compensation due for services performed by Tarpon Springs Police personnel will be paid by Cash, Check or Money Order only to:

The City of Tarpon Springs Attn. Collections
P.O. Box 5004
Tarpon Springs, FL. 34688-5004 (727)942-5612

Officers are prohibited from accepting cash and/or check payments. Any employer failing to meet this deadline may be refused further details.

At large events, the hiring entity shall be required to employ a sufficient number of officers to ensure safe and efficient law enforcement coverage, as determined by the Operations Major or his/her designee. The special detail coordinator shall make a minimum manpower requirement determination to ensure proper security and safety of agency members and the community. The Operations Major or his/her designee shall determine appropriate manpower allocation for all events where alcohol is served. For events that require five or more officers, it will be required to have one supervisor for every five officers needed.

If the event becomes larger than expected or stated, then the on-duty officer or supervisor may request the event is terminated early for safety reasons, or at the approval of the applicant call more officers in to assist.

Contact the Special Events Coordinator Major John Gibson for additional information: Office Phone number: 727-938-2849 ext. 1670 or by e-mail JGIBSON@TSPD.US

Anne Billiris
Applicant's signature of understanding

Public Works Department
Office of the Director

Chris Cotta
Public Works Director

To: Mayor and Board of Commissioners

From: Chris Cotta, Public Works Director

Date: December 9, 2025

Subject: Special Event – Tarpon Springs Merchants Association
1st Friday in Tarpon Springs 2026
2/6, 3/6, 4/3, 5/1, 6/5, 7/3, 8/7, 9/4, 10/2 & 11/6, 2026

Recommendation:

That the Mayor and Board of Commissioners approve the Tarpon Springs Merchants Associations' special event application for the "1st Friday in Tarpon Springs" on 2/6, 3/6, 4/3, 5/1, 6/5, 7/3, 8/7, 9/4, 10/2 & 11/6, 2026 and the temporary closure of Tarpon Ave. (Pinellas Ave. to Ring Ave.), Hibiscus St. (Tarpon Ave. to Orange St.), N. Safford Ave. (Tarpon Ave. to Orange St. – will leave Truist Bank exit open), S. Safford Ave. (Tarpon Ave. to Court St. south bound & Lemon St. to Tarpon Ave. north bound), East Court St. from Alt 19 (Pinellas Ave. to Wells Fargo Parking Lot – on an as needed basis for overflow vendors), to the end of Mother Meres Parking Lot, and Tarpon Ave. Restroom Parking Lot.

If a change in the event date is necessary due to inclement weather, the City Manager will authorize/designate a rain date.

Background:

This event has been approved by the Special Events Review Committee based on previous years' event.

The hours of the event will be from 6:00 p.m. to 10:00 p.m. with setup beginning at 3:00 p.m. and cleanup ending by 11:30 p.m. Tarpon Ave. Restroom Parking lot will close at 2:00 p.m. due to delivery of beer/tent area. This event will consist of music, vendors and food/beverage (beer & wine). Each month there will be a different theme. Proceeds will be used to advertise other events and promote Tarpon Springs.

The event sponsor has notified area businesses that may be affected by this event and will be responsible for all set-up and clean-up.

It is understood that in order for the Sponsor to receive a permit to proceed, he/she must comply with the following:

- A Certificate of Insurance in the amount of $1,000,000 naming the City as an "additional insured".

Approval of this event authorizes the Sponsor/User the use of City property for said special event with the understanding that they must operate and carry out the needs and functions of the event within the confines and requirements established and approved by the Special Events Committee, the B.O.C. and the Sponsor's application on record.

City of Tarpon Springs
Application for Special Events

Event Information:

Date of Application: October 23rd, 2025

Name of Event: 2026 Tarpon Springs First Friday

Date(s) of Event: February 6th, March 6th, April 3rd, May 1st, June 5th, July 3rd, August 7th, September 4th, October 2nd, and November 6th 2026

Alternate Date(s): N/a

Hours of Event: 6-10 PM

Set up/break down time needed: 3 PM setup, 11:30 PM teardown

Type/Purpose of Event: fundraiser for the Tarpon Springs Merchants Association. Event includes food & retail vendors, live music

Location of Event (include map for parade/procession routes with assembly and disband points): Tarpon Ave (Pinellas Ave to Ring St), Hibiscus St (Tarpon Ave to Orange St), Safford Ave N (Tarpon Ave to Orange St), Safford Ave S (Tarpon Ave to Court Street), E Court Street (Pinellas Ave to end of Mother Meres parking lot–will not be blocking behind the Meres building)

If Closure of City Parking is needed, please check street:

Mother Meres ☒ Tarpon Ave. ☒ Orange St. ☐ Court/Lemon ☐

Other: We're requesting the side street parking lot on Tarpon Ave be closed at 2 PM due to the delivery/set up of beer/wine tent.

Disposition of Proceeds: Pay for expenses of the event and advertising of other TSMA events

Applicant Information:

Name of Organization: Tarpon Springs Merchants Association

Registered Nonprofit Org.: Yes ☒ No ☐ or City Department ☐

Organizations Address: P.O. Box 2793, Tarpon Springs, FL 34688

Individual to Contact: Julia Bodwell

(Telephone #) 727-608-8362 (email) tsmaevents@gmail.com

Alternative Contact: Sherry Wendt

(Telephone #) 706-897-1047 (email) sherrygene39@gmail.com

General Information:

Number of Vendors: 150-200 depending on the month (Sponsor is required to keep a list of vendors and must be able to produce upon request.)

Location for Designated Vendor Parking (Please complete Vendor Designated Parking Form and attach to application): Public parking lots and side street parking, municipal lot on W Court St (for large vehicles and trailers) and parking lot on W Tarpon Ave (for small vehicles and cars)

Approximate Number of Attendees: 1500-2500 depending on month

Entrance Fee: Free

Location for Attendee Parking: Public parking lots and side streets

Will Private Security be Provided: Yes ☐ No X Name of Private Company:_____

Will the Following be Provided: Traffic Control: Yes XNo ☐ Crowd Control: Yes X No ☐

Will Music be Provided: Yes X No ☐ Hours of Play: 6-10 PM Band: X DJ: X or Other: individual musicians

Type & Location of Toilet Facilities: City restroom in Mother Meres parking lot. If unavailable, port-o-potties will be ordered

Tent or Other Structure: Yes X No ☐ Type of Structure: tent, under permit size

How will Structure be Secured: as required with weights, etc

Solid Waste Collection/Disposal: Yes X No ☐ Dumpster: ☐ Rolloff: ☐ Other: will hire city employee from 7:30 PM until finished

If parade # of: Participants_____Animals_____Floats _____Bands _____Other _____

Amusement/Carnival Rides: Yes ☐ No X Name of Company Providing Rides:_____

Types of Rides: _____

Is Diagram of Layout Attached: Yes ☒ No ☐

Will Food/Beverages be Served: Yes X No ☐ Cooked on Site: X Catered: ☐ Sold: X Given Away: X

Will Alcoholic Beverages be Served: Yes X No ☐

Type of Alcoholic Beverages: beer and wine

Event Sponsor is responsible to ensure that all food/alcohol vendors have all necessary licenses as required by the Department of Business and Professional Regulations, Division of Hotels & Restaurants and/or Division of Alcohol and Tobacco, Department of Health, Environmental Health Division, or any other applicable State Agency.

Equipment/Miscellaneous (please check if needed):

Barricades: X How many: as determined by TSPD

Cones: X How many: as determined by TSPD

Portable Stage: ☐ Location: TSMA will rent one

Electricity Needed: X Where: Mother Meres parking lot, Tarpon Ave, city parking lot on Tarpon Ave, Safford Ave, Hibiscus St

Public Restrooms: X Hours of Opening/Closing: remain open until 11 PM

Street Banners: X Location: city approved locations

Electric Message Board: X To promote one week prior to event

Additional City Trash Cans: X Wherever metal cans are located, we would like an additional temporary can added

Directional Parking Signs: ☐ Locations: _____

Other: requesting city maintenance employe from 4 PM until finished, city's big generator and tower light to be placed in empty lot behind fence where stage will be located, as well as tower lights at end of E Court St and in Mother Meres lot; digital sign to be placed at end of E Court Street prior to event reminding drivers of road closures. Requesting use of city tables and chairs, and additional lighting on S Safford Ave

Is a check made payable to the City of Tarpon Springs for the Application Fee & Deposit Attached:

Yes ☐ No ☒ N/A ☐

If not, when will it be sent: will be dropped off in person

Is the Certificate of Insurance Attached: Yes ☐ No ☒ If not, when will it be sent: once received from insurance company

I (we) agree that it is my (our) responsibility to clean up after the conclusion of the special event: Yes ☒ No ☐

I (we) have read and completed this application, and it is true and correct to the best of my (our) knowledge; I (we) have read the general instructions for this application and the City of Tarpon Springs Ordinance #88-25 and agree to conform with the provisions as set forth therein. I (we) understand that knowingly providing false information on the application shall automatically void the application and cancel the event.

Signature of Applicant

10/23/25
Date

Application Revised 07/2025)

Tarpon Ave/N & S Safford

-vendors will be placed on both sides of Tarpon Ave from Ring to Pinellas Ave
-vendors will be placed on both the east and west sides of N Safford Ave from Tarpon Ave to Orange St
-vendors will be placed on the west side of S Safford Ave from Tarpon Ave to Court St
-Beer/wine tent will be placed in the City parking lot on Tarpon Ave
-stage that we rent will be placed in the empty lot on Tarpon Ave

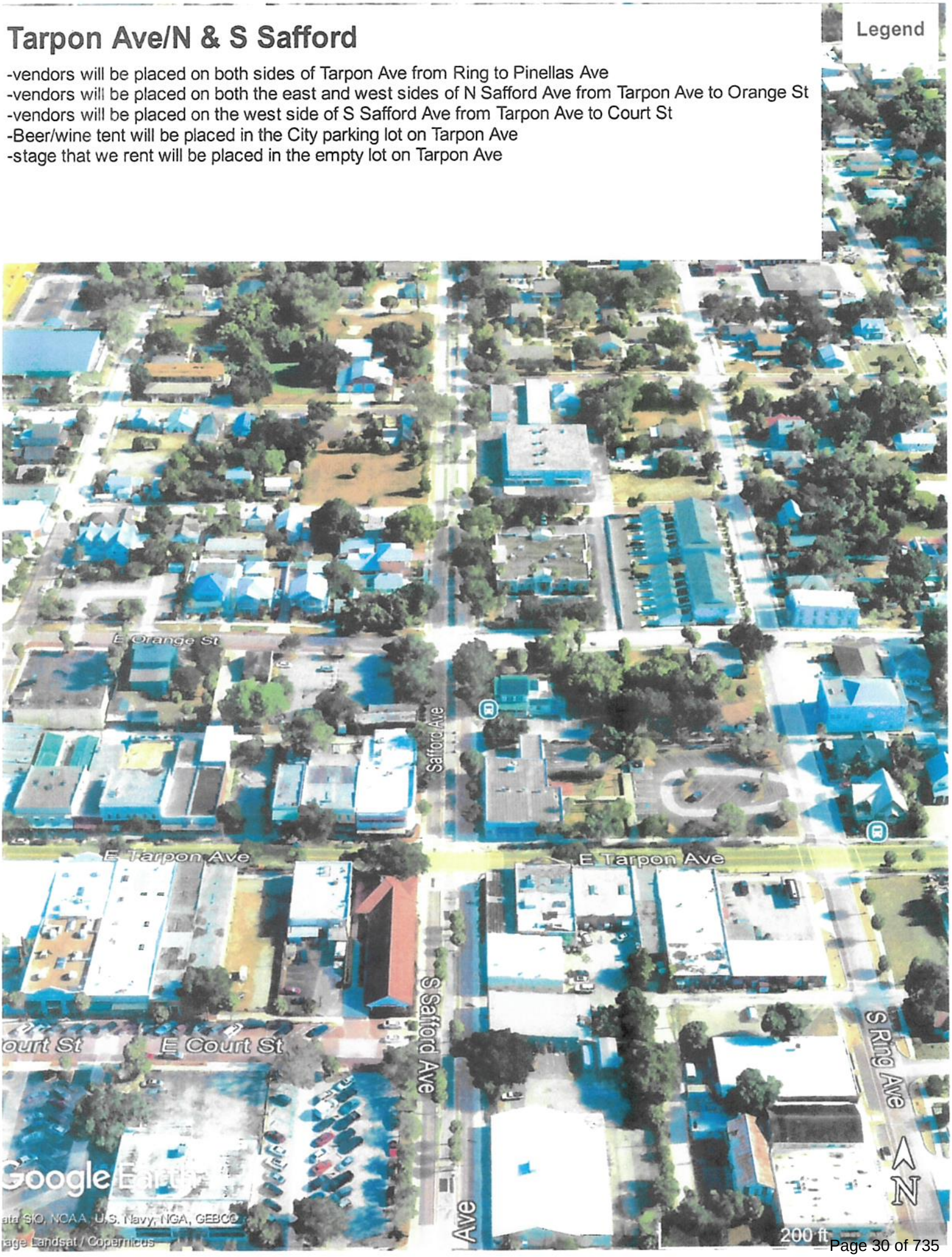

Mother Meres Parking Lot/Hibiscus St

Legend

-vendors will be placed within the parking lot
-vendors will be placed on both sides of E Court Street from Pinellas Ave to the end of the driveway going into Mother Mer
-vendors will be placed on the west side of Hibiscus St



Jeffrey P. Young
CHIEF OF POLICE

Tarpon Springs Police
Extra Duty Detail Application Rules

Thank you for inquiring about the availability of off-duty officers for security services or other related functions. In compliance with Tarpon Springs Police Department General Order #122, this application is required to engage the extra-duty services of police officers for public safety, health and welfare services in addition to those already provided to the public. It is understood that this is a non-binding agreement. The Police Department may cancel this request without advance notice or cause at any time. The Tarpon Springs Police Department will attempt to place officers during the requested dates and hours. Because of emergencies, inability to find an Officer to work this detail or other unforeseen circumstances, this request may not be filled when requested. The Tarpon Springs Police Department will not permit an Officer to work an assignment that is deemed as a conflict of interest.

The following represents the hourly rate associated with this service, beginning October 1, 2022

Fees

$50.00 (per hour) Regular	$60.00 per hour for requests received within 72 hours of the date of the event	$60.00(per hour) Premium

There is a three (3) hour minimum on all off-duty employment.

In accordance with the current collective bargaining agreement between the City of Tarpon Springs and the Pinellas County Police Benevolent Association Inc., the following holidays will be charged at a Premium rate:

Thanksgiving Day
Christmas Eve Day (December 24)
Christmas Day (December 25) New
Years Eve (December 31) New Years
Day (January 1)

Cancellations

Job cancellations must be made at least two (2) hours **prior** to the scheduled starting time of the detail (with exception of a natural disaster) and must be called in to the Patrol Supervisor at 727-938-2849.

The (3) hour minimum shall apply to cancellations not meeting this requirement. If the time worked is greater than half the assigned time, the officer will be paid for the full time of the assignment scheduled.

Applicant's signature of understanding

10/23/25

Payment
Invoices for services rendered for off-duty work will be sent to the vendor after the event has occurred, unless otherwise specified. All compensation due for services performed by Tarpon Springs Police personnel will be paid by Cash, Check or Money Order only to:

The City of Tarpon Springs Attn. Collections
P.O. Box 5004
Tarpon Springs, FL. 34688-5004 (727)942-5612

Officers are prohibited from accepting cash and/or check payments. Any employer failing to meet this deadline may be refused further details.

At large events, the hiring entity shall be required to employ a sufficient number of officers to ensure safe and efficient law enforcement coverage, as determined by the Operations Major or his/her designee. The special detail coordinator shall make a minimum manpower requirement determination to ensure proper security and safety of agency members and the community. The Operations Major or his/her designee shall determine appropriate manpower allocation for all events where alcohol is served. For events that require five or more officers, it will be required to have one supervisor for every five officers needed.

If the event becomes larger than expected or stated, then the on-duty officer or supervisor may request the event is terminated early for safety reasons, or at the approval of the applicant call more officers in to assist.

Contact the Special Events Coordinator Major John Gibson for additional information: Office Phone number: 727-938-2849 ext. 1670 or by e-mail JGIBSON@TSPD.US

10/23/25
Applicant's signature of understanding

TARPON SPRINGS POLICE DEPARTMENT

"Building a Better Future Through Excellence in Policing"

Jeffrey P. Young
CHIEF OF POLICE

Extra Duty Detail Application

Business Name: Tarpon Springs Merchants Assoc Phone Number: 727-608-8362

Address of event: Tarpon Ave (Pinellas to Ring), S Safford Ave (Tarpon Ave to Court) N Safford Ave (Tarpon Ave to Orange) Hibiscus St (Tarpon Ave to Orange)

Applicant Name: Tarpon Springs Merchants Assoc Phone Number: 727-608-8362

Applicant's Address: P.O. Box 2793, Tarpon Springs, FL 34688

Applicant's Date of birth: 6/5/89 Email address: tsmaevents@gmail.com

Applicant's Driver's License Number: B540338970580 Sate: FL

Contact Person at the event: Julia Bodwell

Type of event: Fundraiser for TSMA advertising

Will alcohol be served at the event? (YES) NO Number of expected Participants: 1500-2500

Requested Officer Duties(please be specific):
No parking signs Walk/patrol streets
Close roads @ 3 PM
Teardown by 11:30 PM

How Many Officers do you require: _____ Police Vehicle Required: YES NO

Starting Date: 2/6/26 Ending Date: 11/6/26 Starting Time: 6 PM Ending Time: 10 PM
First Friday each month (excluding Jan/Dec)

Buy signing this form, I agree that, I have read and understand the entire agreement and agree to pay for the services render, which are in writing or are verbally agreed upon in an emergency situation to prevent shutting down the event if it becomes too large.

Applicant's signature of understanding

Approved or Denied by: _____ Date: _____

Public Works Department
Office of the Director

Chris Cotta
Public Works Director

To: Mayor and Board of Commissioners

From: Chris Cotta, Public Works Director

Date: December 9, 2025.

Subject: Special Event – Tarpon Springs Merchants Association
2nd Saturday Tarpon Springs Market 2026
2/14, 4/11, 5/9, 9/12, 10/10, 11/14 & 12/12, 2026

Recommendation:

That the Mayor and Board of Commissioners approve the Tarpon Springs Merchants Associations' special event application for the "2nd Saturday Tarpon Springs Market" on 2/14, 4/11, 5/9, 9/12, 10/10, 11/14 & 12/12, 2026 and the temporary closure of Mother Meres Parking Lot.

If a change in the event date is necessary due to inclement weather, the City Manager will authorize/designate a rain date.

Background:

This event has been approved by the Special Events Review Committee based on previous years' events.

The hours of the event will be from 9:00 a.m. to 2:00 p.m., with setup beginning at 7:00 a.m. and cleanup ending by 2:30 p.m. The event will consist of local "farmers market type" vendors. Proceeds will be used to pay event expenses and advertise future events.

The event sponsor will be responsible for all set-up and clean-up.

It is understood that for the Sponsor to receive a permit to proceed, he/she must comply with the following:

- A Certificate of Insurance in the amount of $1,000,000 naming the City as an "additional insured".

Approval of this event authorizes the Sponsor/User the use of City property for said special event with the understanding that they must operate and carry out the needs and functions of the event within the confines and requirements established and approved by the Special Events Committee, the B.O.C. and the Sponsor's application on record.

City of Tarpon Springs
Application for Special Events

Event Information:

Date of Application: October 23rd, 2025

Name of Event: 2026 Tarpon Springs Second Saturday

Date(s) of Event: February 14th, April 11th, May 9th, September 12th, October 10th, November 14th, December 12th 2026

Alternate Date(s): N/a

Hours of Event: 9 AM - 2 PM

Set up/break down time needed: 7 AM setup, 2:30 PM teardown

Type/Purpose of Event: fundraiser for the Tarpon Springs Merchants Association. Event includes food & retail vendors

Location of Event (include map for parade/procession routes with assembly and disband points): Mother Meres parking lot

If Closure of City Parking is needed, please check street:

Mother Meres X Tarpon Ave. Orange St. Court/Lemon

Other:

Disposition of Proceeds: Pay for expenses of the event and advertising of other TSMA events

Applicant Information:

Name of Organization: Tarpon Springs Merchants Association

Registered Nonprofit Org.: Yes X No ☐ or City Department ☐

Organizations Address: P.O. Box 2793, Tarpon Springs, FL 34688

Individual to Contact: Julia Bodwell

(Telephone #) 727-608-8362 (email) tsmaevents@gmail.com

Alternative Contact: Sherry Wendt

(Telephone #) 706-897-1047 (email) sherrygene39@gmail.com

General Information:

Number of Vendors: 30-50 depending on the month (Sponsor is required to keep a list of vendors and must be able to produce upon request.)

Location for Designated Vendor Parking (Please complete Vendor Designated Parking Form and attach to application): Public parking lots and side street parking, municipal lot on W Court St (for large vehicles and trailers) and parking lot on W Tarpon Ave (for small vehicles and cars)

Approximate Number of Attendees: 200-500 depending on month

Entrance Fee: Free

Location for Attendee Parking: Public parking lots and side streets

Will Private Security be Provided: Yes ☐ No X Name of Private Company:_____

Will the Following be Provided: Traffic Control: Yes No X Crowd Control: Yes No X

Will Music be Provided: Yes No X Hours of Play: Band: DJ: or Other:

Type & Location of Toilet Facilities: n/a will use permanent city bathrooms.

Tent or Other Structure: Yes No X Type of Structure:

How will Structure be Secured:

Solid Waste Collection/Disposal: Yes X No ☒ Dumpster: ☐ Rolloff: ☐ Other:

If parade # of: Participants_____Animals_____Floats _____Bands _____Other _____

Amusement/Carnival Rides: Yes ☐ No X Name of Company Providing Rides:_____

Types of Rides: _____

Is Diagram of Layout Attached: Yes ☐ No ☐

Will Food/Beverages be Served: Yes X No ☐ Cooked on Site: X Catered: ☐ Sold: X Given Away: X

Will Alcoholic Beverages be Served: Yes No X

Type of Alcoholic Beverages:

Event Sponsor is responsible to ensure that all food/alcohol vendors have all necessary licenses as required by the Department of Business and Professional Regulations, Division of Hotels & Restaurants and/or Division of Alcohol and Tobacco, Department of Health, Environmental Health Division, or any other applicable State Agency.

Equipment/Miscellaneous (please check if needed):

Barricades:	X How many: as determined by TSPD
Cones:	X How many: as determined by TSPD
Portable Stage:	☐ Location:
Electricity Needed:	X Where: Mother Meres parking lot
Public Restrooms:	X Hours of Opening/Closing: regular hours
Street Banners:	X Location: city approved locations
Electric Message Board:	X To promote one week prior to event

Additional City Trash Cans:

Directional Parking Signs: ☐ Locations: _____

Other:

Is a check made payable to the City of Tarpon Springs for the Application Fee & Deposit Attached:

Yes X No N/A ☐

If not, when will it be sent:

Is the Certificate of Insurance Attached: Yes ☐ No X If not, when will it be sent: once received from insurance company

I (we) agree that it is my (our) responsibility to clean up after the conclusion of the special event: Yes X No ☐

I (we) have read and completed this application, and it is true and correct to the best of my (our) knowledge; I (we) have read the general instructions for this application and the City of Tarpon Springs Ordinance #88-25 and agree to conform with the provisions as set forth therein. I (we) understand that knowingly providing false information on the application shall automatically void the application and cancel the event.

_____ 10/23/25

Signature of Applicant Date

Application Revised 07/2025)

Public Works Department
Office of the Director

Chris Cotta
Public Works Director

To: Mayor and Board of Commissioners

From: Chris Cotta, Public Works Director

Date: December 9, 2025

Re: Special Event – Tarpon Springs Merchants Association
Tarpon Springs Sponge Docks Craft Festival 2026
01/10-11, 04/18-19, 07/11-12, 10/10-11 2026

Recommendation:

That the Mayor and Board of Commissioners approve the Tarpon Springs Merchants Association's special event application for the "Tarpon Springs Sponge Docks Craft Festival" on January 10-11, April 18-19, July 11-12, October 10-11, 2026, and the temporary closure of Dodecanese Blvd. from Athens to Roosevelt, Hope St. from Dodecanese to the beginning of Hellas parking lot. Also, 600 Hill Street City Lot and the parcel across on Hill St. The City parking lot where the public restroom is.
If a change in the event date is necessary due to inclement weather, the City Manager will authorize/designate a rain date.

Background:

This event has been approved by the Special Events Review Committee based on previous years' events.

Saturday's hours of the event will be from 10:00 a.m. to 7:00 p.m. Sunday's 10:00am to 5:00pm Set-up will begin at 6:00 am on Saturday's & tear down Sunday at 7:30pm. The event will consist of vendors and food/beverages will be sold. All proceeds from this event will be used for advertising future events.

All set-up and clean-up will be the event sponsor's responsibility, and they have notified area businesses that may be affected by this event.

It is understood that in order for the Sponsor to receive a permit to proceed, he/she must comply with the following:

- A Certificate of Insurance in the amount of $1,000,000 naming the City as an "additional insured".

Approval of this event authorizes the Sponsor/User the use of City property for said special event with the understanding that they must operate and carry out the needs and functions of the event within the confines and requirements established and approved by the Special Events Committee, the B.O.C. and the Sponsor's application on record.

City of Tarpon Springs
Application for Special Events

Event Information:

Date of Application: November 11th, 2025

Name of Event: 2026 Tarpon Springs Sponge Docks Craft Festival

Date(s) of Event: Jan 10-11th, April 18-19th, July 11-12th, October 10-11th 2026

Alternate Date(s): N/a

Hours of Event: Saturdays 10 AM-7 PM; Sundays 10 AM-5 PM

Set up/break down time needed: Saturdays setup 6 AM; Teardown Sundays 7:30 PM

Type/Purpose of Event: fundraiser for the Tarpon Springs Merchants Association. Event includes food & craft vendors

Location of Event (include map for parade/procession routes with assembly and disband points): Dodecanese Blvd from Athens Street to Roosevelt, Hope Street from Dodecanese to beginning of Hellas parking lot

If Closure of City Parking is needed, please check street:

Mother Meres Tarpon Ave. Orange St. ☐ Court/Lemon ☐

Other: City parking lot on Dodecanese where public restrooms are. We're also getting the necessary paperwork to use Greek Islands Imports and Louis Houllis's parking lots

Disposition of Proceeds: Pay for expenses of the event and advertising of other TSMA events

Applicant Information:

Name of Organization: Tarpon Springs Merchants Association

Registered Nonprofit Org.: Yes X No ☐

Organizations Address: P.O. Box 2793, Tarpon Springs, FL 34688

Individual to Contact: Julia Bodwell

(Telephone #) 727-608-8362 (email) tsmaevents@gmail.com

Alternative Contact: Sherry Wendt

(Telephone #) 706-897-1047 (email) sherrygene39@gmail.com

General Information:

Number of Vendors: 85-100 depending on the month (Sponsor is required to keep a list of vendors and must be able to produce upon request.)

Location for Designated Vendor Parking (Please complete Vendor Designated Parking Form and attach to application): Public parking lots and street parking

Approximate Number of Attendees: 1000-2000 depending on month

Entrance Fee: Free

Location for Attendee Parking: Public parking lots and side streets

Will Private Security be Provided: Yes X No Name of Private Company: Event planner to provide info prior to event

conform with the provisions as set forth therein. I (we) understand that knowingly providing false information on the application shall automatically void the application and cancel the event.

Signature of Applicant

Date 11/11/25

Application Revised 07/2025)

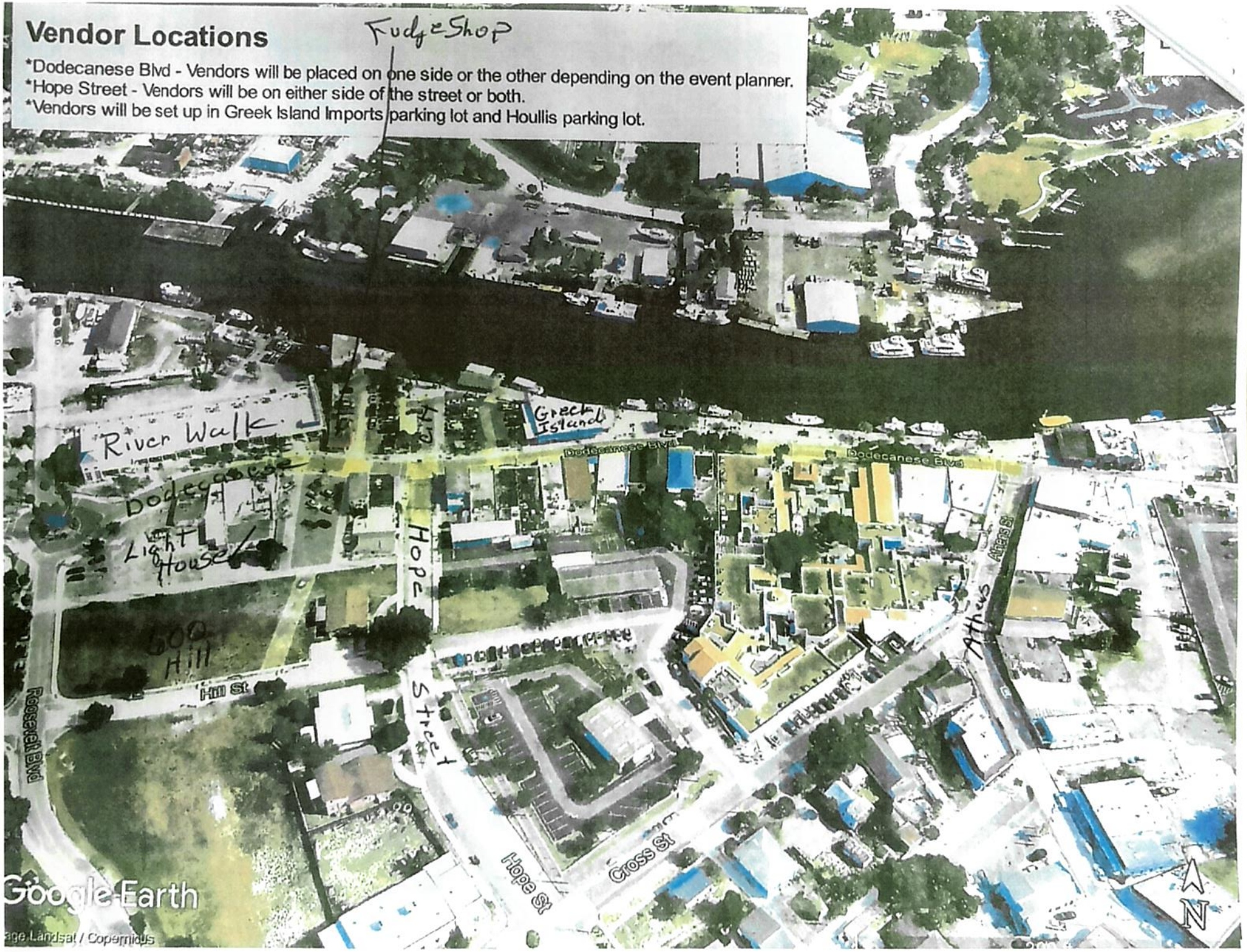
Vendor Locations
*Dodecanese Blvd - Vendors will be placed on one side or the other depending on the event planner.
*Hope Street - Vendors will be on either side of the street or both.
*Vendors will be set up in Greek Island Imports parking lot and Houllis parking lot.
Fudge Shop
River Walk
Dodecanese
Light House
Hope
Street
Greek Island
Dodecanese Blvd
Athens St
Athens
Hill St
Roosevelt Blvd
Hope St
Cross St
Google Earth
N

TARPON SPRINGS
POLICE DEPARTMENT
"Building a Better Future Through Excellence in Policing"
Jeffrey P. Young
CHIEF OF POLICE

Tarpon Springs Police
Extra Duty Detail Application Rules

Thank you for inquiring about the availability of off-duty officers for security services or other related functions. In compliance with Tarpon Springs Police Department General Order #122, this application is required to engage the extra-duty services of police officers for public safety, health and welfare services in addition to those already provided to the public. It is understood that this is a non-binding agreement. The Police Department may cancel this request without advance notice or cause at any time. The Tarpon Springs Police Department will attempt to place officers during the requested dates and hours. Because of emergencies, inability to find an Officer to work this detail or other unforeseen circumstances, this request may not be filled when requested. The Tarpon Springs Police Department will not permit an Officer to work an assignment that is deemed as a conflict of interest.

The following represents the hourly rate associated with this service, beginning October 1, 2022

Fees

$50.00 (per hour) Regular	$60.00 per hour for requests received within 72 hours of the date of the event	$60.00(per hour) Premium

There is a three (3) hour minimum on all off-duty employment.

In accordance with the current collective bargaining agreement between the City of Tarpon Springs and the Pinellas County Police Benevolent Association Inc., the following holidays will be charged at a Premium rate:

Thanksgiving Day
Christmas Eve Day (December 24)
Christmas Day (December 25) New
Years Eve (December 31) New Years
Day (January 1)

Cancellations

Job cancellations must be made at least two (2) hours **prior** to the scheduled starting time of the detail (with exception of a natural disaster) and must be called in to the Patrol Supervisor at 727-938-2849.

The (3) hour minimum shall apply to cancellations not meeting this requirement. If the time worked is greater than half the assigned time, the officer will be paid for the full time of the assignment scheduled.

Applicant's signature of understanding

11/17/25

444 S. Huey Ave. Tarpon Springs, FL 34689 · Phone (727) 938-2849
WWW.TSPD.US
"A Full Service Accredited Law Enforcement Agency"

Payment

Invoices for services rendered for off-duty work will be sent to the vendor after the event has occurred, unless otherwise specified. All compensation due for services performed by Tarpon Springs Police personnel will be paid by Cash, Check or Money Order only to:

The City of Tarpon Springs Attn. Collections
P.O. Box 5004
Tarpon Springs, FL. 34688-5004 (727)942-5612

Officers are prohibited from accepting cash and/or check payments. Any employer failing to meet this deadline may be refused further details.

At large events, the hiring entity shall be required to employ a sufficient number of officers to ensure safe and efficient law enforcement coverage, as determined by the Operations Major or his/her designee. The special detail coordinator shall make a minimum manpower requirement determination to ensure proper security and safety of agency members and the community. The Operations Major or his/her designee shall determine appropriate manpower allocation for all events where alcohol is served. For events that require five or more officers, it will be required to have one supervisor for every five officers needed.

If the event becomes larger than expected or stated, then the on-duty officer or supervisor may request the event is terminated early for safety reasons, or at the approval of the applicant call more officers in to assist.

Contact the Special Events Coordinator Major John Gibson for additional information: Office Phone number: 727-938-2849 ext. 1670 or by e-mail JGIBSON@TSPD.US

11/17/25
Applicant's signature of understanding

TARPON SPRINGS POLICE DEPARTMENT

"Building a Better Future Through Excellence in Policing"

Jeffrey P. Young
CHIEF OF POLICE

Extra Duty Detail Application

Business Name: Tarpon Springs Merchants Association Phone Number: 727-608-8362

Address of event: Dodecanese Blvd

Applicant Name: ~~Tarpon~~ Julia Bodwell Phone Number: 727-608-8362

Applicant's Address: 123 E Court Street, Tarpon Springs FL 34689

Applicant's Date of birth: 6/5/89 Email address: tsmaevents@gmail.com

Applicant's Driver's License Number: B340-433-89-705-0 Sate: FL

Contact Person at the event: Julia Bodwell

Type of event: Sponge Docks Craft Festival

Will alcohol be served at the event? YES (NO) Number of expected Participants: 1000-2000

Requested Officer Duties(please be specific):
patrol event, block off street

How Many Officers do you require: Usual amount Police Vehicle Required: YES NO

Starting Date: 1/10/26 Ending Date: 10/11/26 Starting Time: _____ Ending Time: _____

Buy signing this form, I agree that, I have read and understand the entire agreement and agree to pay for the services render, which are in writing or are verbally agreed upon in an emergency situation to prevent shutting down the event if it becomes too large.

11/17/25
Applicant's signature of understanding

Approved or Denied by: _____ Date: _____

Chris Cotta
Public Works Director

Public Works Department
Office of the Director

To: Mayor and Board of Commissioners

From: Chris Cotta, Public Works Director

Date: December 9, 2025

Subject: Special Event – Rotary Club of Tarpon Springs & Car Shows for Charities
Fenders for First Responders
February 21, 2026

Recommendation:

That the Mayor and Board of Commissioners approve the Rotary Club of Tarpon Springs special event application for the "Fenders for First Responders" car show and temporary closure of Tarpon Ave, from Ring Ave. to Pinellas Ave., Safford Ave. from Lemon St. to Orange St., Hibiscus St. to Orange St. on February 21,2026.

If a change in the event date is necessary due to inclement weather, the City Manager will authorize/designate a rain date.

Background:

This event has been approved in the past by the Special Events Review Committee, along with business owners along Tarpon Ave and surrounding streets.
Road closures have been discussed with the area businesses that may be affected by the event.

The event hours will begin at 10:00 a.m. and end at 4:00 p.m. with setup starting at 6:00 a.m. & breakdown from 4:00p.m. to 5:00p.m. Music will be provided, on a Stage in Forbes Lot from 10:00a.m. to 3:00 p.m., if permission is granted by lot owners.

The event sponsor (Rotary Club of Tarpon Springs) is responsible for all set up and cleanup of the area. It is understood that for the Sponsor to receive a permit to proceed, he/she must comply with the following:

- A Certificate of Insurance in the amount of $1,000,000 naming the City as an "additional insured".

Approval of this event authorizes the Sponsor/User the use of City property for said special event with the understanding that they must operate and carry out the needs and functions of the event within the confines and requirements established and approved by the Special Events Committee, the B.O.C and the Sponsor's application on record.

City of Tarpon Springs
Application for Special Events

Event Information:

Date of Application: November 24, 2025

Name of Event: 3rd Annual Fenders for 1st Responders Car Show

Date(s) of Event: Saturday, February 21, 2026

Alternate Date(s): Sunday, February 22, 2026

Hours of Event: 10am-4pm

Set up/break down time needed: Set up 6am-10am, Breakdown 4pm-5pm

Type/Purpose of Event: This is the 3rd Annual Fenders for 1st Responders Car Show. Car Shows for Charities will manage this event. The event is sponsored by the Rotary Club of Tarpon Springs. This event will benefit All First Responders Matter Foundation Corporation (AFRM). AFRM in turn host events during the year for fire and police personnel that will help them with building resiliency for the strenuous job that they have.

Location of Event (include map for parade/procession routes with assembly and disband points): The location will be in downtown Tarpon Springs. This includes Tarpon Ave from Ring Street to Pinellas Ave. Safford Ave from Lemon Street to E. Orange. Hibiscus Street from Tarpon Ave. to the alley way before E. Orange Street. We will not block off access to the alley way behind the stores or building on the north side of Tarpon Ave. We will not block of the alley way for the ATM machine for Truist Bank. We will not block of access from Court Street to E. Lemon Street southbound.

If Closure of City Parking is needed, please check street:

Mother Meres ☐ Tarpon Ave. X Orange St. ☐ Court/Lemon ☐

Other: We will need to close all parking long Tarpon Ave from Ring Street to Pinellas Ave. We will need to close parking for the City spaces near the restrooms for our staff setup.

Disposition of Proceeds: All First Responders Matter Foundation Corporation, A 501©3 Non-profit Organization.

Applicant Information:

Name of Organization: Rotary Club of Tarpon Springs

Registered Nonprofit Org.: Yes X No ☐ or City Department ☐

Organizations Address:

Individual to Contact: Rev. Milton Smith, Immediate Past President

(Telephone #) 727-798-5718 (email) s.milton48@yahoo.com

Alternative Contact: Mike Chaplain, President

(Telephone #) 727-415-3181 (email) Mike.Chapman81658@gmail.com

General Information:

Number of Vendors: 10 or less (Sponsor is required to keep a list of vendors and must be able to produce upon request.)

Location for Designated Vendor Parking (Please complete Vendor Designated Parking Form and attach to application): Vendors will be set up along Tarpon Ave. Their vehicle will be parked at the Truist Bank Parking lot. We receive permission from the bank to use their parking lot each year.

Approximate Number of Attendees: 5000 walking throughout the day. Entrance Fee: $ -O- Free event

Location for Attendee Parking: All surrounding city parking lots.

Will Private Security be Provided: Yes ☐ No X Name of Private Company: _____

Will the Following be Provided: Traffic Control: Yes ☐ No X Crowd Control: Yes ☐ No X

Will Music be Provided: Yes X No ☐ Hours of Play: 10am-3pm Band: ☐ DJ: X or Other: _____

Type & Location of Toilet Facilities: City portable restrooms requested for Mother Mere's Parking lot.

Tent or Other Structure: Yes ☐ No X Type of Structure: _____

How will Structure be Secured: _____

Solid Waste Collection/Disposal: Yes ☐ No X Dumpster: ☐ Rolloff: ☐ Other: _____

If parade # of: Participants N/A Animals _____ Floats _____ Bands _____ Other _____

Amusement/Carnival Rides: Yes ☐ No ☐ Name of Company Providing Rides: _____

Types of Rides: N/A _____

Is Diagram of Layout Attached: Yes ☐ No ☐ Will provide.

Will Food/Beverages be Served: Yes X No ☐ Snacks only for event staff. Might have a coffee vendor.

Cooked on Site: ☐ Catered: ☐ Sold: ☐ Given Away: ☐

Will Alcoholic Beverages be Served: Yes ☐ No X

Type of Alcoholic Beverages: N/A _____

Event Sponsor is responsible to ensure that all food/alcohol vendors have all necessary licenses as required by the Department of Business and Professional Regulations, Division of Hotels & Restaurants and/or Division of Alcohol and Tobacco, Department of Health, Environmental Health Division, or any other applicable State Agency.

Equipment/Miscellaneous (please check if needed):

Barricades:	X -How many: For city side streets. City and police department to staff to determine.
Cones:	X -How many: For city side streets. City and police department to staff to determine.
Portable Stage:	X -Location: On City owned Forbes vacant lot.
Electricity Needed:	X -Where: Along Tarpon Ave from Ring Street to Pinellas and along Safford Ave.
Public Restrooms:	X -Hours of Opening/Closing: Open from 6am until 5pm.
Street Banners:	X- Location: N/A

Electric Message Board: X Please place event on City Electric Boards.

Additional City Trash Cans: X Please place additional trash collection boxes along event route.

Directional Parking Signs: ☐ Locations: _____

Other: _____

Is a check made payable to the City of Tarpon Springs for the Application Fee & Deposit Attached:

Yes X No ☐ N/A ☐

If not, when will it be sent: _____

Is the Certificate of Insurance Attached: Yes X No ☐ If not, when will it be sent: _____

I (we) agree that it is my (our) responsibility to clean up after the conclusion of the special event: Yes X No ☐

I (we) have read and completed this application, and it is true and correct to the best of my (our) knowledge; I (we) have read the general instructions for this application and the City of Tarpon Springs Ordinance #88-25 and agree to conform with the provisions as set forth therein. I (we) understand that knowingly providing false information on the application shall automatically void the application and cancel the event.

Rev. Milton B. Smith November 24, 2025

Signature of Applicant Date

City of Tarpon Springs
Special Event
Designated Vendor Parking

To be submitted to the Public Works Department along with the Special Events Application.

General Information:

Name of Event: Fenders for 1st Responders Annual Car Show

Date of Event: February 21, 2026

Designation Location for Vendor Parking: Vendors will be set up along Tarpon Ave. Their vehicles will be parked in the Truist Parking lot.

Owner/Agent of Designated Parking Area Signoff:

Rev. Milton B. Smith _____ *Rev. Milton B. Smith*
Owner/Agent Name (print) Owner/Agent Signature

Rotary Club of Tarpon Springs, Immediate Past President November 24, 2025
Owner/Agent Title Date

Event Sponsor Signoff:

I have read and completed this form, and it is true and correct to the best of my knowledge.

Rev. Milton B. Smith November 24, 2025
Event Sponsor Signature Date

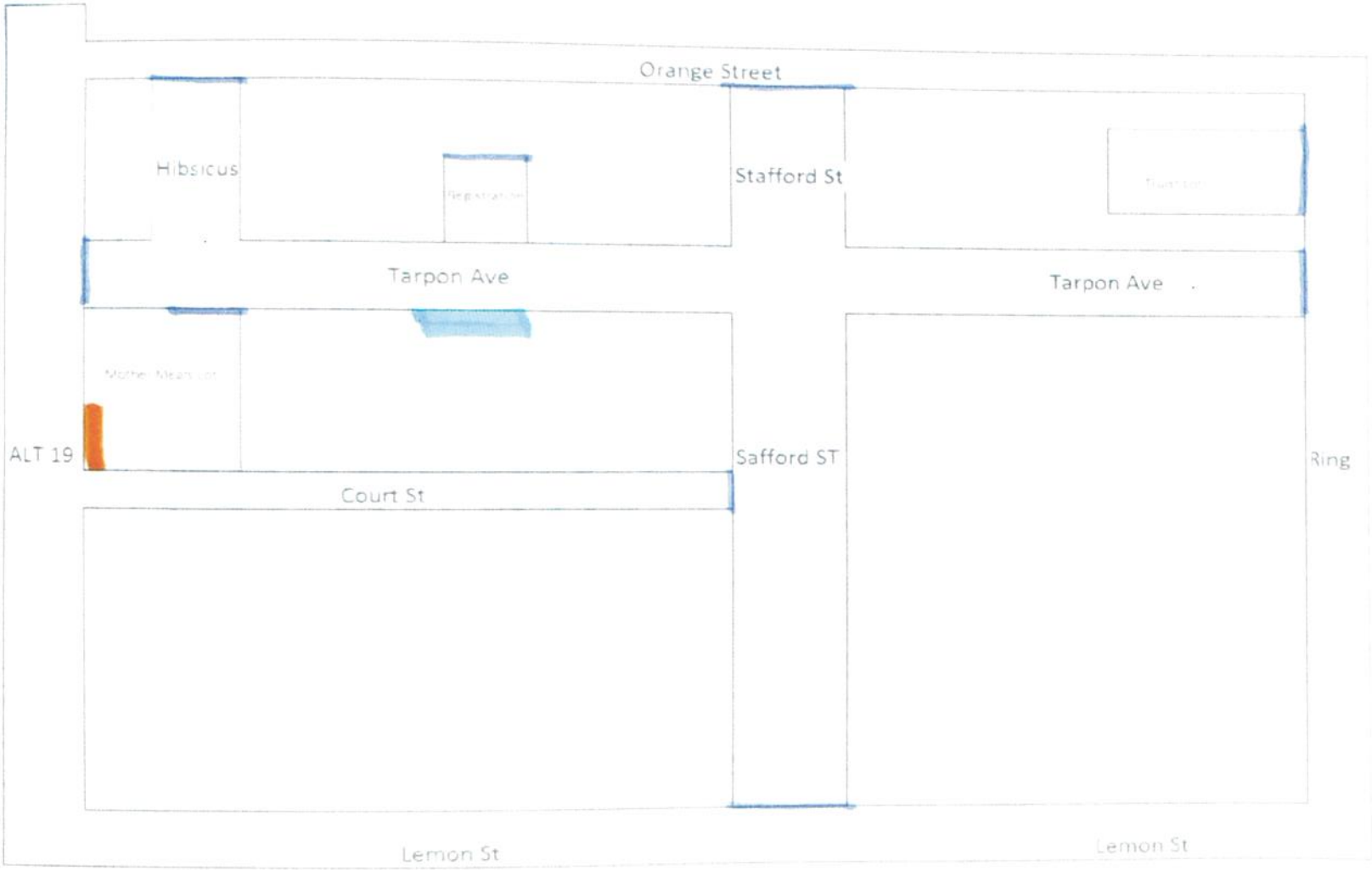
Orange Street
Hibsicus
Stafford St
Tarpon Ave
Tarpon Ave
ALT 19
Safford ST
Court St
Ring
Lemon St
Lemon St
Barricades
Stage
Restrooms

Pinellas County Supervisor of Elections
13001 Starkey Rd., Largo, FL 33773 • (727) 464-6108 • VotePinellas.gov

Contract for Conducting Municipal Election

City of Tarpon Springs

Municipal Election - March 10, 2026

WHEREAS, the City/Town has requested the assistance of the Office of the County Supervisor of Elections (Supervisor) in conducting its General Election; and

WHEREAS, the Supervisor is agreeable to providing such assistance to the City/Town subject to the following conditions, considerations and agreements arrived at between the parties;

IT IS HEREBY AGREED AS FOLLOWS:

GENERAL PROVISIONS

The election is to be conducted under any applicable ordinances of the City/Town and all sections of Chapters 97-106, Florida Statutes (F.S.) (the Florida Election Code). The City/Town is responsible for all legal notices. It is understood that the Supervisor is in charge of the election, and that the County Canvassing Board is responsible for canvassing the election (no cost to the City/Town). The City/Town may have a designated representative in the canvassing board room. This designee may only serve in an "observer" capacity and may not participate in the canvassing of the election. The County Canvassing Board will determine whether a recount is required and advise the City/Town. However, the Supervisor is unable to support any type of runoff election.

The County Canvassing Board will certify the election results and will provide a Certificate of Election to the City/Town (ONE Certificate of Election will include all elections held on the same day). The Certificate of Election will be provided to the City/Town after the County Canvassing Board certifies the official election results.

The post-election automated audit may not begin until the Canvassing Board has certified the official election results.

The City/Town is responsible for the costs associated with conducting an annexation election (mapping annexation areas, reassigning addresses, and mailing new voter information cards). The City/Town is responsible for the costs associated with any legal action or contest of election arising from its election. The City/Town, the Supervisor of Elections and the County Canvassing Board agree that the County Attorney's Office will represent the Supervisor of Elections and County Canvassing Board in any legal action concerning the canvass or certification of the election.

It is understood that the provisions of this contract are based on current state law, and if any changes in election law should occur during the period of this agreement, those changes will supersede the terms of this contract where applicable.

Contract for Conducting Municipal Election

The City/Town will provide the Supervisor with the current City/Town definition/boundaries and include a list of ALL annexations (actual list of addresses) since your last election, no later than 5:00 p.m., December 10, 2025. It is the responsibility of the City/Town to ensure the Supervisor has the current definition/boundary information so all eligible voters can participate in the City/Town's election. The City/Town agrees that NO changes to the City/Town definition/boundaries will be made effective between 5:00 p.m., December 10, 2025, and Midnight, March 10, 2026. Contact the IT Department at (727) 464-4958 or SOEIT@VotePinellas.gov for all questions concerning annexations and for providing annexation information (City/Town definition/boundary changes).

This contract must be signed by the City/Town and received by the Supervisor no later than the ballot language deadline of 5:00 p.m., December 10, 2025.

Upon request, the Supervisor may provide to the City/Town with the number of registered voters for this election.

ELECTION INFORMATION

Election Title:	**Municipal Elections**
Election Date:	**March 10, 2026**
Voter Registration Deadline:	**February 9, 2026**

SPECIAL PROVISIONS

City/Town Clerk:	**Irene Jacobs**
***Election Day Cell Phone:**	**(727) 698-8793**
Alternate Phone:	**(727) 943-3536**
Email:	**cityclerk1@ctsfl.us**
Mailing Address:	**P.O. Box 5004, Tarpon Springs, FL 34688**

***The City/Town Clerk MUST be available from 5:00 a.m. to 10:00 p.m. on Election Day/Night.**

TRANSLATION (Spanish – Section 203, Voting Rights Act) (Matt Smith – 464-5751)

a. Pinellas County is a jurisdiction covered by Section 203 of the Voting Rights Act and must provide language assistance (Spanish). ALL municipalities within Pinellas County are also covered by Section 203 of the Voting Rights Act.
b. Full compliance is a requirement for all jurisdictions (County and Municipal). This means that all information directed to voters or otherwise concerning voting-connected activities must be provided in both English and Spanish. This includes, but is not limited to, voter registration, legal advertisements and/or other notices, forms, voting instructions and procedures at the polls or otherwise, polling place signage, any printed voter information guides or website information concerning elections, communication assistance

at the polls and election offices and communication with the jurisdiction's minority language community. The obligations and requirements apply to all elections conducted by the City/Town.

c. Questions concerning your legal obligations/requirements to comply with Section 203, Voting Rights Act should be directed to your legal counsel.

BALLOT INFORMATION (Wendy Grimes – 464-4987)

a. Final Ballot Language is due no later than **5:00 p.m., December 10, 2025** and must include all qualified opposed candidates and resolutions and/or ordinances with ballot questions.
b. All ballot language must comply with Florida Statutes 101.161(1) and the Uniform Ballot Rule (1S-2.032).
c. Using the Ballot Language Submittal Form – Complete required information. Include information and Candidate Oaths for ONLY qualified opposed candidates in ballot order. All Charter Amendments and/or Referendum Questions with SIGNED/APPROVED Ordinances/Resolutions must include numbering for ballot order and English and Spanish translated text.
d. Email ballot language to Wendy Grimes at WGrimes@VotePinellas.gov by the final ballot language deadline.

BALLOT LAYOUT/PRINTING (David Wise – 464-4958)

a. The Supervisor is responsible for creating the ballot (ballot layout will comply with Florida Statutes and the Uniform Ballot Rule).
b. The City/Town is responsible for approving the City/Town's portion of ballot.
c. Precinct ballots will be printed by the Supervisor. The Supervisor will bill the City/Town 28 cents per ballot card (includes ground shipping charges). The Supervisor will bill the City/Town for any required expedited shipping charges.
d. Provisional ballots will be printed by the Supervisor; the Supervisor will bill the City/Town 28 cents per ballot card (25 per city/town). The Supervisor will bill the City/Town for any required expedited shipping charges.
e. If the City/Town requires a ballot change after ballots are printed, the City/Town is responsible for additional costs.

CANDIDATE AUDIO RECORDING (Nicole Sokolowski/David Wise – 464-4958)

a. The deadline for candidates to record their names and office titles for the audio ballot is **5:00 p.m., December 17, 2025**. It is the responsibility of the City/Town to notify City/Town candidates of this deadline.
b. Candidates must call (727) 453-3293; a voice message will prompt the candidate to record his/her name as indicated on the Candidate Oath and the office for which the candidate is running.

MAIL BALLOTS (Marisa Crispell – 464-6108)

a. The Supervisor will bill the City/Town $1.58 for each mail ballot kit used in initial mailing (return postage included).
b. The Supervisor will bill the City/Town $2.21 for each mail ballot kit used for daily mailing.
c. The deadline for mailing military/overseas ballots is **January 24, 2026;** at least 45 days prior to the election [F.S. 101.62(4)(a)].

d. Mailing Schedule for domestic ballots will begin **no earlier than January 29, 2026 and no later than February 5, 2026** [F.S 101.62(4)(b)].
e. After the initial mailings, ballots will be mailed as requests are received. The deadline to request a ballot be mailed is **5:00 p.m. February 26, 2026**; twelve days prior to the election. [F.S. 101.62]
f. The City/Town will provide voting assistance in assisted living facilities and nursing homes, if requested, per F.S. 101.655.
g. Duplicate and test ballots will be printed by the Supervisor; the Supervisor will bill the City/Town 38 cents per ballot card.

LEGAL NOTICES (Ashley McKnight-Taylor – 453-7553)

a. The City/Town is responsible for ALL legal notices required by State Statute and by City/Town Charter/Ordinance, with the exception of the County Canvassing Board Meeting/Testing Schedule.
b. The Supervisor will publish the County Canvassing Board Meeting/Testing Schedule at no cost to the City/Town.
c. The Supervisor will provide the City/Town a County Canvassing Board Meeting/Testing Schedule, Polling Place List, Polling Place Changes list and Sample Ballot.

TESTING THE BALLOT COUNTING EQUIPMENT (David Wise – 464-4958)

The County Canvassing Board will certify test results of the ballot counting equipment and file the election parameters with the Division of Elections. All tests will be performed at the Election Service Center, 13001 Starkey Road, Largo.

CANVASSING BOARD MEETING SCHEDULE (Ashley McKnight-Taylor – 453-7553)

a. **The Supervisor will publish the Canvassing Board Meeting/Testing Schedule at no cost to the City/Town.**
b. All Canvassing Board Meetings will take place at the Election Service Center, 13001 Starkey Rd., Largo.
c. A Canvassing Board Schedule will be emailed to the City/Town Clerk as part of this contract.
    i. The Canvassing Board/testing schedule reflects ALL possible meeting days.
    ii. The Canvassing Board will modify the schedule as needed based on the number of mail ballots received. Updates to the canvassing board schedule will be posted to the Supervisor's website (VotePinellas.gov).

CANVASSING MAIL BALLOTS (Carriane McQuay – 464-5723)

The Supervisor, in the presence of the County Canvassing Board will open and prepare mail ballots for tabulation at the Election Service Center. Questionable ballots will be presented to the County Canvassing Board for decision. The Canvassing Board/testing schedule reflects ALL possible meeting days. The Canvassing Board will modify the schedule as needed based on the number of mail ballots received. Updates to the canvassing board schedule will be posted to the Supervisor's website (Votepinellas.gov).

PROVISIONAL BALLOTS (Carriane McQuay – 464-5723)

The Supervisor will research each provisional ballot to determine the voter's eligibility and will present the provisional ballots to the County Canvassing Board for decision. Voters casting a provisional ballot have two days after Election Day to provide written proof of eligibility to the County Canvassing Board. The deadline for this election is **5:00 p.m., March 12, 2026** [F.S. 101.048]. All provisional ballots will be canvassed at the Election Service Center.

POLL WATCHERS (Wendy Grimes – 464-4987)

a. Election Day poll watcher designations must be submitted to the City/Town by **NOON, February 24, 2026** (Prior to noon on the second Tuesday preceding Election Day [F.S. 101.131(2)]). The City/Town will email all poll watcher designation forms (DS-DE 125) to Wendy Grimes at **WGrimes@VotePinellas.gov by 5:00 p.m. Wednesday, February 25, 2026** and the Supervisor will verify whether they are Pinellas County registered voters.
b. The Supervisor will furnish a list of approved poll watchers to the City/Town **by 5:00 p.m. March 3, 2026** (on or before the Tuesday before Election Day [F.S. 101.131(2)]).
c. Each poll watcher must wear an identification badge while performing his or her duties [F.S. 101.131(5)].
d. Poll watchers shall produce identification to the precinct clerk upon entering the polling place (this information will be verified against a list of designated poll watchers compiled prior to election day).
e. The Supervisor of Elections shall provide to each designated poll watcher an identification badge that identifies the poll watcher by name at the polling place.

OVER-THE-COUNTER BALLOT PICKUP AND DROP-OFF (Marisa Crispell – 464-6108)

a. In-office ballot pickup and drop-off will be available in each Supervisor of Elections Office, Monday through Friday from 8:00 am until 5:00 pm (no holidays/weekends) beginning 45 days prior to the date of the election.
b. The City/Town, pursuant to F.S. 101.657(1)(e), has opted out of conducting early voting.

VOTING EQUIPMENT AND SUPPLIES (Byron Green – 464-6109)

a. The Supervisor will contract with a moving company to transport the voting equipment and supplies to and from polling locations. Cost is the responsibility of the City/Town and will be billed by the Supervisor.
b. Supplies not transported by the moving company will be picked up by the precinct clerks after Clerks' Class at the Election Service Center.
c. The Supervisor will contract to have paper precinct registers for Election Day printed by a vendor and will bill the City/Town. These paper precinct registers are a "back-up system" to the electronic poll book system and will be included in the polling place supplies sent to each polling place.

Contract for Conducting Municipal Election

POLL WORKERS (Byron Green – 464-6110)

a. The Supervisor will recruit, assign, train, and compensate ALL poll workers. The city/town will be invoiced for these costs and reimburse the Supervisor.

b. A Deputy Sheriff will deputize the poll deputies.

c. Poll workers that are unable to work Election Day but attended class(es) will **not** be compensated for class attended (amount varies by position).

Poll Worker Pay Rates	
Precinct Clerk	$310 + $30 for classes (2) + $15 Equipment Setup = **$355**
Assistant Clerk	$260 + $20 for class (1) + $15 Equipment Setup = **$295**
Machine Manager	$240 + $10 per class (1) + $15 Equipment Setup + $10 EM Return Site = **$275**
Voting Equip. Support	$240 + $15 per class (1) + $15 Equipment Setup = **$270**
Assist. Machine Manager	$240 + $10 per class (1) = **$250**
Inspector	$230 + $10 per class (1) = **$240**
Precinct Deputy	$230 + $10 per class (1) = **$240**

POLLING PLACES (Byron Green – 464-6110)

a. The Supervisor will select, contract with and compensate polling places [F.S. 101.715].

b. The Supervisor will pay polling places and bill the City/Town.

c. The Supervisor will give each Precinct Clerk a cell phone to use Election Day.

d. If polling place changes are needed, the Supervisor will notify the City/Town in writing, listing the precincts and polling location changes by **5:00 p.m., Friday, February 6, 2026** (at least 30 days prior to the election).

POLLING PLACE CHANGE NOTICES (David Wise/Nicole Sokolowski – 464-4958)

a. If notices are needed, the Supervisor will provide the names and addresses of the affected voters to the vendor; **one per household, unless otherwise indicated by the city/town.** Notices must be mailed by **February 24, 2026** (at least 14 days prior to the election).

b. The City/Town is responsible for costs associated with notice printing and mailing. The Supervisor will be responsible for the notice design, arrangements with the vendor for printing/mailing, proofing live samples of the household address, precinct number and polling place information.

c. The City/Town is responsible for publishing any polling place changes in a newspaper of general circulation [F.S. 101.71(2)].

ELECTION NIGHT PROCEDURES (Dustin Chase – 464-4988)

a. The Supervisor will have unofficial election results modemed from the polling places to the Election Service Center.
b. The Supervisor will have the precinct scanner memory sticks, voted precinct and provisional ballots, and election supplies transported to the Election Service Center.
c. Results will be released throughout the night and posted to the Supervisor's website (VotePinellas.gov). The Supervisor will provide unofficial results on election night.
d. Campaign Signs – If candidates wish to reuse their campaign signs left at the polls on Election Day, the signs must be collected by campaign staff prior to poll workers removing and disposing of them after the polls close. It is the responsibility of the City/Town to communicate this information to their candidates.

AFTER ELECTION DAY (Ashley McKnight-Taylor – 453-7553)

a. Provisional ballots will be canvassed. All ballots accepted by the County Canvassing Board will be processed and added to the election night results to produce Official Election Results. Provisional ballots cannot be rejected until after the deadline for provisional ballot voters to provide written proof of eligibility [F.S. 101.048].
b. The County Canvassing Board will certify the election results and will provide a Certificate of Election to the City/Town (ONE Certificate of Election will include all elections held on the same day). This document will be provided to the City/Town via email after the County Canvassing Board certifies the official election results.
c. The County Canvassing Board will conduct a post-election automated audit in accordance with F.S. 101.591 and Division of Elections Administrative Rule 1S-5.026. The Supervisor will post the required post-election audit notices to the Supervisor's website and at each election office. The Supervisor will post the final post-election audit report to the Supervisor's website.
d. Election materials will remain sealed at the Election Service Center for ten days after certification of the election. The City/Town will be notified when all election materials are ready to be picked up.

DATA ORDERS (David Wise/Nicole Sokolowski – 464-4958)

The City/Town is to place data orders directly with an IT staff member by contacting (727) 464-4958 or SOEIT@VotePinellas.gov.

VOTER HISTORY (David Wise/Nicole Sokolowski – 464-4958)

When voter history is completed, the City/Town may download the current voter registration file at VotePinellas.gov, which includes voter history for this and any past elections.

Contract for Conducting Municipal Election

ELECTION COSTS (Susan Morse – 464-6108)

a. In addition to specific costs noted in this contract, the City/Town will pay an administration fee of 40 cents per registered voter; the minimum charge is $400.

b. The City/Town will be provided an invoice based on election cost estimates. Payment must be received no later than **5:00 p.m., December 10, 2025.** After the election, based on actual election costs, the Supervisor will reimburse the City/Town for unused funds or provide the City/Town with an invoice for additional costs incurred.

By affixing their signatures hereto, the parties acknowledge each to the other that they have full authority to enter this Contract.

APPROVED:

OFFICE OF THE PINELLAS COUNTY SUPERVISOR OF ELECTIONS

Print name:_____

Title:_____

Date:_____

APPROVED:

☐ Mayor

Print name: John M. Koulianos

Date:_____

APPROVED AS TO FORM:

OFFICE OF THE PINELLAS COUNTY ATTORNEY

Print name:_____

Title:_____

Date:_____

REVIEWED AND APPROVED:

CITY/TOWN ATTORNEY

Print name: Andrew Salzman

Date:_____

ATTEST TO:

☐ OFFICE OF THE CITY OF TARPON SPRINGS

Print name: Irene S. Jacobs

Title: City Clerk & Collector

Date:_____

Project Administration Department

324 East Pine Street
Tarpon Springs FL 34689
(727) 942-5638

Memorandum

Date: December 9, 2025

To: Mayor, Board of Commissioners, and City Manager

Through: Bob Robertson, Project Administration Department Director

From: P.J. Harbert, Grant Project Specialist

Subject: Approve Florida Department of Emergency Management Subrecipient Agreement #H1255, Project #4734-077-R

Recommendation
Approval is recommended for the Mayor to execute a Subrecipient Agreement with the Florida Department of Emergency Management as a pass-through entity from the Federal Emergency Management Agency for the Sponge Docks, Flooding Risk Reduction, Phase 1. This agreement allows for $31,718.71 in federal funds for the design phase of a two-phased project to reduce flood risk in the Sponge Docks area of the City.

Summary
Through the proposed agreement, the Florida Department of Emergency Management (FDEM), as a pass-through entity for the Federal Emergency Management Agency (FEMA), agrees to partner with the City of Tarpon Springs to provide $31,718.71 in federal funds to complete design for this two-phased project. This is a cost reimbursement grant with a $15,263.71 match from the City. Upon successful completion of Phase 1 (design and permitting), the City will enter into a subrecipient agreement to complete Phase 2 (construction). This project has a total estimated project cost of $4,756,067.00. The City will use matching funds from the State of Florida Department of Environmental Protection (FDEP) State Appropriation Funding in the amount of $1,738,390.00. The Phase 1 agreement is in effect through 3/31/2027.

The agreement document is attached.

The City Attorney has reviewed this agreement.

SUB-RECIPIENT AGREEMENT CHECKLIST

DIVISION OF EMERGENCY MANAGEMENT
MITIGATION BUREAU
FISCAL OPERATIONS UNIT
HMGP

REQUEST FOR REVIEW AND APPROVAL	
SUB-RECIPIENT:	City of Tarpon Springs
PROJECT #:	4734-077-R
PROJECT TITLE:	City of Tarpon Springs, Sponge Docks, Flood Risk Reduction
HMGP CONTRACT #:	H1255
SM CONTRACT #: (if applicable)	N/A
MODIFICATION #:	N/A

SUB-RECIPIENT REPRESENTATIVE (POINT OF CONTACT)	
	Paulette Harbert Grant Project Specialist 324 East Pine Street Tarpon Springs, Florida 34689

Enclosed is your copy of the proposed contract(s)/modification(s) between **City of Tarpon Springs** and the Florida Division of Emergency Management (FDEM).

	COMPLETE
☒	This form is required to be included with all Reviews, Approvals, and Submittals
☒	Reviewed and Approved
☒	Signed & Dated Electronic Copy of HMGP Contract by Official Representative
☐	Signed & Dated Electronic Copy of SM Contract by Official Representative (if applicable)
☒	**Copy of the organization's resolution or charter** that specifically identifies the person or position that is authorized to sign, if not Chairman, Mayor, or Chief
☒	Attachment I - Federal Funding Accountability and Transparency Act (FFATA) - completed, signed, and dated ☐ N/A for Modifications or State Funded Agreements
☒	Attachment K – Certification Regarding Lobbying - completed, signed, and dated ☐ N/A for Modifications or State Funded Agreements
☒	Attachment L – FACTS - completed, signed, and dated ☐ N/A for Modifications or State Funded Agreements
☒	Attachment M – Foreign County of Concern Affidavit completed, signed, and dated ☐ N/A for Modifications or State Funded Agreements
☒	Electronic Submittal to the Grant Specialist

SUB-RECIPIENT AGREEMENT CHECKLIST

If you have any questions regarding this contract, or who is authorized to sign it, please contact your Project Manager at 770-668-8231 or email me at **samara.burke@em.myflorida.com.**

Agreement Number: **H1255**

Project Number: **4734-077-R**

FEDERALLY-FUNDED SUBAWARD AND GRANT AGREEMENT

2 C.F.R. §200.1 states that a "subaward may be provided through any form of legal agreement, including an agreement that the pass-through entity considers a contract."

As defined by 2 C.F.R. §200.1, "pass-through entity" means "a non-Federal entity that provides a subaward to a subrecipient to carry out part of a Federal program."

As defined by 2 C.F.R. §200.1 , "Sub-Recipient" means "an entity, usually but not limited to non-Federal entities that receives a subaward from a pass-through entity to carry out part of a Federal program."

As defined by 2 C.F.R. §200.1, "Federal award" means "Federal financial assistance that a non-Federal entity receives directly from a Federal awarding agency or indirectly from a pass-through entity."

As defined by 2 C.F.R. §200.1, "subaward" means "an award provided by a pass-through entity to a Sub-Recipient for the Sub-Recipient to carry out part of a Federal award received by the pass-through entity."

The following information is provided pursuant to 2 C.F.R. §200.332:

Sub-Recipient's name:	City of Tarpon Springs
Sub-Recipient's unique entity identifier (UEI/FEIN):	Q41BMMTPYN93 / 596000437
Federal Award Identification Number (FAIN):	FEMA-DR-4734-FL
Federal Award Date:	September 11, 2025
Subaward Period of Performance Start and End Date:	September 11, 2025 – March 31, 2027
Amount of Federal Funds Obligated by this Agreement:	$31,718.71
Total Amount of Federal Funds Obligated to the Sub-Recipient by the pass-through entity to include this Agreement:	$31,718.71
Total Amount of the Federal Award committed to the Sub-Recipient by the pass-through entity	$31,718.71
Federal award project description (see FFATA):	Flood Risk Reduction
Name of Federal awarding agency:	Federal Emergency Management Agency
Name of pass-through entity:	FL Division of Emergency Management
Contact information for the pass-through entity:	Samara.Burke@em.myflorida.com
Catalog of Federal Domestic Assistance (CFDA) Number and Name:	97.039 Hazard Mitigation Grant Program
Whether the award is R&D:	N/A
Indirect cost rate for the Federal award:	N/A

THIS AGREEMENT is entered into by the State of Florida, Division of Emergency Management, with headquarters in Tallahassee, Florida (hereinafter referred to as the "Division"), and City of Tarpon Springs, (hereinafter referred to as the "Sub-Recipient").

For the purposes of this Agreement, the Division serves as the pass-through entity for a Federal award, and the Sub-Recipient serves as the recipient of a subaward.

THIS AGREEMENT IS ENTERED INTO BASED ON THE FOLLOWING REPRESENTATIONS:

A. The Sub-Recipient represents that it is fully qualified and eligible to receive these grant funds to provide the services identified herein;

B. The State of Florida received these grant funds from the Federal government, and the Division has the authority to subgrant these funds to the Sub-Recipient upon the terms and conditions outlined below; and,

C. The Division has statutory authority to disburse the funds under this Agreement.

THEREFORE, the Division and the Sub-Recipient agree to the following:

(1) APPLICATION OF STATE LAW TO THIS AGREEMENT

2 C.F.R. §200.302(a) provides: “Each state must expend and account for the Federal award in accordance with state laws and procedures for expending and accounting for the state's own funds.” Therefore, section 215.971, Florida Statutes, entitled “Agreements funded with federal or state assistance”, applies to this Agreement.

(2) LAWS, RULES, REGULATIONS AND POLICIES

a. The Sub-Recipient's performance under this Agreement is subject to 2 C.F.R. Part 200, entitled “Uniform Administrative Requirements, Cost Principles, and Audit Requirements for Federal Awards.”

b. As required by section 215.971(1), Florida Statutes, this Agreement includes:

i. A provision specifying a scope of work that clearly establishes the tasks that the Sub-Recipient is required to perform.

ii. A provision dividing the agreement into quantifiable units of deliverables that must be received and accepted in writing by the Division before payment. Each deliverable must be directly related to the scope of work and specify the required minimum level of service to be performed and the criteria for evaluating the successful completion of each deliverable.

iii. A provision specifying the financial consequences that apply if the Sub-Recipient fails to perform the minimum level of service required by the agreement.

iv. A provision specifying that the Sub-Recipient may expend funds only for allowable costs resulting from obligations incurred during the specified agreement period.

v. A provision specifying that any balance of unobligated funds which has been advanced or paid must be refunded to the Division.

vi. A provision specifying that any funds paid in excess of the amount to which the Sub-Recipient is entitled under the terms and conditions of the agreement must be refunded to the Division.

c. In addition to the foregoing, the Sub-Recipient and the Division shall be governed by all applicable State and Federal laws, rules and regulations, including those identified in Attachment B. Any express reference in this Agreement to a particular statute, rule, or regulation in no way implies that no other statute, rule, or regulation applies.

(3) CONTACT

a. In accordance with section 215.971(2), Florida Statutes, the Division's Grant Manager shall be responsible for enforcing performance of this Agreement's terms and conditions and shall serve as the Division's liaison with the Sub-Recipient. As part of his/her duties, the Grant Manager for the Division shall:

i. Monitor and document Sub-Recipient performance; and,

ii. Review and document all deliverables for which the Sub-Recipient requests payment.

b. The Division's Grant Manager for this Agreement is:

Samara Burke
Project Manager
Bureau of Mitigation
Florida Division of Emergency Management
2555 Shumard Oak Blvd.
Tallahassee, FL 3299-2100
Telephone: 770-668-8231
Email: Samara.Burke@em.myflorida.com

The Division's Alternate Grant Manager for this Agreement is:

Kathleen Marshall
Community Program Manager
Bureau of Mitigation
Florida Division of Emergency Management
2555 Shumard Oak Boulevard
Tallahassee, FL 32399
Telephone: 850-815-4503
Email: Kathleen.Marshall@em.myflorida.com

1. The name and address of the Representative of the Sub-Recipient responsible for the administration of this Agreement is:

   Paulette Harbert
   Grant Project Specialist
   324 East Pine Street
   Tarpon Springs, Florida 34689
   Telephone: 330-207-0098
   Email: pharbert@ctsfl.us

2. In the event that different representatives or addresses are designated by either party after execution of this Agreement, notice of the name, title and address of the new representative will be provided to the other party.

(4) TERMS AND CONDITIONS

This Agreement contains all the terms and conditions agreed upon by the parties.

(5) EXECUTION

This Agreement may be executed in any number of counterparts, any one of which may be taken as an original.

(6) MODIFICATION

Either party may request modification of the provisions of this Agreement. Changes which are agreed upon shall be valid only when in writing, signed by each of the parties, and attached to the original of this Agreement.

(7) SCOPE OF WORK

The Sub-Recipient shall perform the work in accordance with the Budget and Scope of Work, Attachment A of this Agreement.

(8) PERIOD OF AGREEMENT

This Agreement shall begin on September 11, 2025 and shall end on March 31, 2027, unless terminated earlier in accordance with the provisions of Paragraph (17) of this Agreement. Consistent with the definition of “period of performance” contained in 2 C.F.R. §200.1, the term “period of agreement” refers to the time during which the Sub-Recipient “may incur new obligations to carry out the work authorized under” this Agreement. In accordance with section 215.971(1)(d), Florida Statutes, the Sub-Recipient may expend funds authorized by this Agreement “only for allowable costs resulting from obligations incurred during” the period of agreement.

The terms of this Agreement are intended to encompass the Pre-Award period. If applicable, the Pre-Award period and FEMA approved Pre-Award costs shall be outlined in Attachment A of this Agreement (“Budget and Scope of Work”).

(9) FUNDING

a. This is a cost-reimbursement Agreement, subject to the availability of funds.

b. The State of Florida's performance and obligation to pay under this Agreement is contingent upon an annual appropriation by the Legislature, and subject to any modification in accordance with either chapter 216, Florida Statutes, or the Florida Constitution.

c. The Division will reimburse the Sub-Recipient only for allowable costs incurred by the Sub-Recipient in the successful completion of each deliverable. The maximum reimbursement amount for each deliverable is outlined in Attachment A of this Agreement ("Budget and Scope of Work"). The maximum reimbursement amount for the entirety of this Agreement is **$31,718.71**.

d. As required by 2 C.F.R. §200.415(a), any request for payment under this Agreement must include a certification, signed by an official who is authorized to legally bind the Sub-Recipient, which reads as follows: "By signing this report, I certify to the best of my knowledge and belief that the report is true, complete, and accurate, and the expenditures, disbursements and cash receipts are for the purposes and objectives set forth in the terms and conditions of the Federal award. I am aware that any false, fictitious, or fraudulent information, or the omission of any material fact, may subject me to criminal, civil or administrative penalties for fraud, false statements, false claims or otherwise. (U.S. Code Title 18, Section 1001 and Title 31, Sections 3729-3730 and 3801-3812)."

e. The Division will review any request for reimbursement by comparing the documentation provided by the Sub-Recipient against a performance measure, outlined in Attachment A, that clearly delineates:

i. The required minimum acceptable level of service to be performed; and,

ii. The criteria for evaluating the successful completion of each deliverable.

f. The performance measure required by section 215.971(1)(b), Florida Statutes, remains consistent with the requirement for a "performance goal", which is defined in 2 C.F.R. §200.1 as "a target level of performance expressed as a tangible, measurable objective, against which actual achievement can be compared." It also remains consistent with the requirement, contained in 2 C.F.R. §200.329, that the Division and the Sub-Recipient "relate financial data to performance goals and objectives of the Federal award."

g. If authorized by the Federal Awarding Agency, then the Division will reimburse the Sub-Recipient for overtime expenses in accordance with 2 C.F.R. §200.430 ("Compensation—personal services") and 2 C.F.R. §200.431 ("Compensation—fringe benefits"). If the Sub-Recipient seeks reimbursement for overtime expenses for periods when no work is performed due to vacation, holiday, illness, failure of the employer to provide sufficient work, or other similar cause (*See* 29 U.S.C. §207(e)(2)), then the Division will treat the expense as a fringe benefit. 2 C.F.R. §200.431(a) defines fringe benefits as "allowances and services provided by employers to their employees as compensation in addition to regular salaries and wages." Fringe benefits are allowable under this Agreement as long as

the benefits are reasonable and are required by law, Sub-Recipient-employee agreement, or an established policy of the Sub-Recipient. 2 C.F.R. §200.431(b) provides that the cost of fringe benefits in the form of regular compensation paid to employees during periods of authorized absences from the job, such as for annual leave, family-related leave, sick leave, holidays, court leave, military leave, administrative leave, and other similar benefits, are allowable if all of the following criteria are met:

i. They are provided under established written leave policies;

ii. The costs are equitably allocated to all related activities, including Federal awards; and,

iii. The accounting basis (cash or accrual) selected for costing each type of leave is consistently followed by the non-Federal entity or specified grouping of employees.

h. If authorized by the Federal Awarding Agency, then the Division will reimburse the Sub-Recipient for travel expenses in accordance with 2 C.F.R. §200.474. As required by the Reference Guide for State Expenditures, reimbursement for travel must be in accordance with section 112.061, Florida Statutes, which includes submission of the claim on the approved state travel voucher. If the Sub-Recipient seeks reimbursement for travel costs that exceed the amounts stated in section 112.061(6)(b), Florida Statutes ($6 for breakfast, $11 for lunch, and $19 for dinner), then the Sub-Recipient must provide documentation that:

i. The costs are reasonable and do not exceed charges normally allowed by the Sub-Recipient in its regular operations as a result of the Sub-Recipient's written travel policy; and,

ii. Participation of the individual in the travel is necessary to the Federal award.

i. The Division's grant manager, as required by section 215.971(2)(c), Florida Statutes, shall reconcile and verify all funds received against all funds expended during the grant agreement period and produce a final reconciliation report. The final report must identify any funds paid in excess of the expenditures incurred by the Sub-Recipient.

j. As defined by 2 C.F.R. §200.1, the term "improper payment" means or includes:

i. Any payment that should not have been made or that was made in an incorrect amount (including overpayments and underpayments) under statutory, contractual, administrative, or other legally applicable requirements; and,

ii. Any payment to an ineligible party, any payment for an ineligible good or service, any duplicate payment, any payment for a good or service not received (except for such payments where authorized by law), any payment that does not account for credit for applicable discounts, and any payment where insufficient or lack of documentation prevents a reviewer from discerning whether a payment was proper.

k. No reimbursements shall be made for costs outside the period of agreement, as defined in paragraph (8) of this Agreement.

(10) <u>RECORDS</u>

a. As required by 2 C.F.R. §200.336, the Federal awarding agency, Inspectors General, the Comptroller General of the United States, and the Division, or any of their authorized representatives, shall enjoy the right of access to any documents, papers, or other records of the Sub-Recipient which are pertinent to the Federal award, in order to make audits, examinations, excerpts, and transcripts. The right of access also includes timely and reasonable access to the Sub-Recipient's personnel for the purpose of interview and discussion related to such documents. Finally, the right of access is not limited to the required retention period but lasts as long as the records are retained.

b. As required by 2 C.F.R. §200.332(a)(5), the Division, the Chief Inspector General of the State of Florida, the Florida Auditor General, or any of their authorized representatives, shall enjoy the right of access to any documents, financial statements, papers, or other records of the Sub-Recipient which are pertinent to this Agreement, in order to make audits, examinations, excerpts, and transcripts. The right of access also includes timely and reasonable access to the Sub-Recipient's personnel for the purpose of interview and discussion related to such documents.

c. As required by Florida Department of State's record retention requirements (Chapter 119, Florida Statutes) and by 2 C.F.R. §200.334, the Sub-Recipient shall retain sufficient records to show its compliance with the terms of this Agreement, as well as the compliance of all subcontractors or consultants paid from funds under this Agreement, for a period of five (5) years from the date of submission of the final expenditure report. The following are the only exceptions to the five (5) year requirement:

i. If any litigation, claim, or audit is started before the expiration of the 5-year period, then the records must be retained until all litigation, claims, or audit findings involving the records have been resolved and final action taken.

ii. When the Division or the Sub-Recipient is notified in writing by the Federal awarding agency, cognizant agency for audit, oversight agency for audit, cognizant agency for indirect costs, or pass-through entity to extend the retention period.

iii. Records for real property and equipment acquired with Federal funds must be retained for 5 years after final disposition.

iv. When records are transferred to or maintained by the Federal awarding agency or pass-through entity, the 5-year retention requirement is not applicable to the Sub-Recipient.

v. Records for program income transactions after the period of performance. In some cases, recipients must report program income after the period of performance. Where there is such a requirement, the retention period for the records pertaining to the earning of the program income starts from the end of the non-Federal entity's fiscal year in which the program income is earned.

vi. Indirect cost rate proposals and cost allocations plans. This paragraph applies to the following types of documents and their supporting records: indirect cost rate computations or proposals, cost allocation plans, and any similar accounting computations of the rate at which a

particular group of costs is chargeable (such as computer usage chargeback rates or composite fringe benefit rates).

d. In accordance with 2 C.F.R. §200.335, the Federal awarding agency must request transfer of certain records to its custody from the Division or the Sub-Recipient when it determines that the records possess long-term retention value.

e. In accordance with 2 C.F.R. §200.336, the Division must always provide or accept paper versions of Agreement information to and from the Sub-Recipient upon request. If paper copies are submitted, then the Division must not require more than an original and two copies. When original records are electronic and cannot be altered, there is no need to create and retain paper copies. When original records are paper, electronic versions may be substituted through the use of duplication or other forms of electronic media provided that they are subject to periodic quality control reviews, provide reasonable safeguards against alteration, and remain readable.

f. As required by 2 C.F.R. §200.303, the Sub-Recipient shall take reasonable measures to safeguard protected personally identifiable information and other information the Federal awarding agency or the Division designates as sensitive or the Sub-Recipient considers sensitive consistent with applicable Federal, state, local, and tribal laws regarding privacy and obligations of confidentiality.

g. Florida's Government in the Sunshine Law (Section 286.011, Florida Statutes) provides the citizens of Florida with a right of access to governmental proceedings and mandates three, basic requirements: (1) meetings of public boards or commissions must be open to the public; (2) reasonable notice of such meetings must be given; and, (3) minutes of the meetings must be taken and promptly recorded. The mere receipt of public funds by a private entity, standing alone, is insufficient to bring that entity within the ambit of the open government requirements. However, the Government in the Sunshine Law applies to private entities that provide services to governmental agencies and that act on behalf of those agencies in the agencies' performance of their public duties. If a public agency delegates the performance of its public purpose to a private entity, then, to the extent that private entity is performing that public purpose, the Government in the Sunshine Law applies. For example, if a volunteer fire department provides firefighting services to a governmental entity and uses facilities and equipment purchased with public funds, then the Government in the Sunshine Law applies to board of directors for that volunteer fire department. Thus, to the extent that the Government in the Sunshine Law applies to the Sub-Recipient based upon the funds provided under this Agreement, the meetings of the Sub-Recipient's governing board or the meetings of any subcommittee making recommendations to the governing board may be subject to open government requirements. These meetings shall be publicly noticed, open to the public, and the minutes of all the meetings shall be public records, available to the public in accordance with chapter 119, Florida Statutes.

h. Florida's Public Records Law provides a right of access to the records of the state and local governments as well as to private entities acting on their behalf. Unless specifically exempted

from disclosure by the Legislature, all materials made or received by a governmental agency (or a private entity acting on behalf of such an agency) in conjunction with official business which are used to perpetuate, communicate, or formalize knowledge qualify as public records subject to public inspection. The mere receipt of public funds by a private entity, standing alone, is insufficient to bring that entity within the ambit of the public record requirements. However, when a public entity delegates a public function to a private entity, the records generated by the private entity's performance of that duty become public records. Thus, the nature and scope of the services provided by a private entity determine whether that entity is acting on behalf of a public agency and is therefore subject to the requirements of Florida's Public Records Law.

i. The Sub-Recipient shall maintain all records for the Sub-Recipient and for all subcontractors or consultants to be paid from funds provided under this Agreement, including documentation of all program costs, in a form sufficient to determine compliance with the requirements and objectives of the Budget and Scope of Work - Attachment A - and all other applicable laws and regulations.

IF THE CONTRACTOR HAS QUESTIONS REGARDING THE APPLICATION OF CHAPTER 119, FLORIDA STATUTES, TO THE CONTRACTOR'S DUTY TO PROVIDE PUBLIC RECORDS RELATING TO THIS CONTRACT, CONTACT THE CUSTODIAN OF PUBLIC RECORDS AT: (850) 815-7671 Records@em.myflorida.com, or 2555 Shumard Oak Boulevard, Tallahassee, FL 32399.

(11) AUDITS

a. The Sub-Recipient shall comply with the audit requirements contained in 2 C.F.R. Part 200, Subpart F.

b. In accounting for the receipt and expenditure of funds under this Agreement, the Sub-Recipient shall follow Generally Accepted Accounting Principles ("GAAP"). As defined by 2 C.F.R. §200.1, GAAP "has the meaning specified in accounting standards issued by the Government Accounting Standards Board (GASB) and the Financial Accounting Standards Board (FASB)."

c. When conducting an audit of the Sub-Recipient's performance under this Agreement, the Division shall use Generally Accepted Government Auditing Standards ("GAGAS"). As defined by 2 C.F.R. §200.1, GAGAS, "also known as the Yellow Book, means generally accepted government auditing standards issued by the Comptroller General of the United States, which are applicable to financial audits."

d. If an audit shows that all or any portion of the funds disbursed were not spent in accordance with the conditions of this Agreement, the Sub-Recipient shall be held liable for reimbursement to the Division of all funds not spent in accordance with these applicable regulations and

Agreement provisions within thirty (30) days after the Division has notified the Sub-Recipient of such non-compliance.

e. The Sub-Recipient shall have all audits completed by an independent auditor, which is defined in section 215.97(2)(i), Florida Statutes, as "an independent certified public accountant licensed under chapter 473." The independent auditor shall state that the audit complied with the applicable provisions noted above. The audit must be received by the Division no later than nine months from the end of the Sub-Recipient's fiscal year.

f. The Sub-Recipient shall send copies of reporting packages for audits conducted in accordance with 2 C.F.R. Part 200, by or on behalf of the Sub-Recipient, to the Division at the following address:

DEMSingle_Audit@em.myflorida.com

OR

Office of the Inspector General

2555 Shumard Oak Boulevard

Tallahassee, Florida 32399-2100

g. The Sub-Recipient shall send the Single Audit reporting package and Form SF-SAC to the Federal Audit Clearinghouse by submission online at:

http://harvester.census.gov/fac/collect/ddeindex.html

h. The Sub-Recipient shall send any management letter issued by the auditor to the Division at the following address:

DEMSingle_Audit@em.myflorida.com

OR

Office of the Inspector General

2555 Shumard Oak Boulevard

Tallahassee, Florida 32399-2100

(12) REPORTS

a. Consistent with 2 C.F.R. §200.328, the Sub-Recipient shall provide the Division with quarterly reports and a close-out report. These reports shall include the current status and progress by the Sub-Recipient and all subcontractors in completing the work described in the Scope of Work and the expenditure of funds under this Agreement, in addition to any other information requested by the Division.

b. Quarterly reports are due to the Division no later than fifteen (15) days after the end of each quarter of the program year and shall be sent each quarter until submission of the administrative close-out report. The ending dates for each quarter of the program year are March 31, June 30, September 30, and December 31.

c. The close-out report is due sixty (60) days after termination of this Agreement or sixty (60) days after completion of the activities contained in this Agreement, whichever first occurs.

d. If all required reports and copies are not sent to the Division or are not completed in a manner acceptable to the Division, then the Division may withhold further payments until they are completed or may take other action as stated in Paragraph (16) REMEDIES. "Acceptable to the Division" means that the work product was completed in accordance with the Budget and Scope of Work.

e. The Sub-Recipient shall provide additional program updates or information that may be required by the Division.

f. The Sub-Recipient shall provide additional reports and information identified in Attachment F.

(13) MONITORING

a. The Sub-Recipient shall monitor its performance under this Agreement, as well as that of its subcontractors and/or consultants who are paid from funds provided under this Agreement, to ensure that time schedules are being met, the Schedule of Deliverables and Scope of Work are being accomplished within the specified time periods, and other performance goals are being achieved. A review shall be done for each function or activity in Attachment A to this Agreement and reported in the quarterly report.

b. In addition to reviews of audits, monitoring procedures may include, but not be limited to, on-site visits by Division staff, limited scope audits, and/or other procedures. The Sub-Recipient agrees to comply and cooperate with any monitoring procedures/processes deemed appropriate by the Division. In the event that the Division determines that a limited scope audit of the Sub-Recipient is appropriate, the Sub-Recipient agrees to comply with any additional instructions provided by the Division to the Sub-Recipient regarding such audit. The Sub-Recipient further agrees to comply and cooperate with any inspections, reviews, investigations or audits deemed necessary by the Florida Chief Financial Officer or Auditor General. In addition, the Division will monitor the performance and financial management by the Sub-Recipient throughout the contract term to ensure timely completion of all tasks.

(14) LIABILITY

a. Unless Sub-Recipient is a State agency or subdivision, as defined in section 768.28(2), Florida Statutes, the Sub-Recipient is solely responsible to parties it deals with in carrying out the terms of this Agreement and, as authorized by section 768.28(19), Florida Statutes, Sub-Recipient shall hold the Division harmless against all claims of whatever nature by third parties arising from the work performance under this Agreement. For purposes of this Agreement, Sub-Recipient agrees that it is not an employee or agent of the Division, but is an independent contractor.

b. As required by section 768.28(19), Florida Statutes, any Sub-Recipient which is a state agency or subdivision, as defined in section 768.28(2), Florida Statutes, agrees to be fully responsible for its negligent or tortious acts or omissions which result in claims or suits against the

Division, and agrees to be liable for any damages proximately caused by the acts or omissions to the extent set forth in section 768.28, Florida Statutes. Nothing herein is intended to serve as a waiver of sovereign immunity by any Sub-Recipient to which sovereign immunity applies. Nothing herein shall be construed as consent by a state agency or subdivision of the State of Florida to be sued by third parties in any matter arising out of any contract.

(15) DEFAULT

If any of the following events occur ("Events of Default"), all obligations on the part of the Division to make further payment of funds shall terminate and the Division has the option to exercise any of its remedies set forth in Paragraph (16); however, the Division may make payments or partial payments after any Events of Default without waiving the right to exercise such remedies, and without becoming liable to make any further payment if:

a. Any warranty or representation made by the Sub-Recipient in this Agreement or any previous agreement with the Division is or becomes false or misleading in any respect, or if the Sub-Recipient fails to keep or perform any of the obligations, terms or covenants in this Agreement or any previous agreement with the Division and has not cured them in timely fashion, or is unable or unwilling to meet its obligations under this Agreement;

b. Material adverse changes occur in the financial condition of the Sub-Recipient at any time during the term of this Agreement, and the Sub-Recipient fails to cure this adverse change within thirty (30) days from the date written notice is sent by the Division;

c. Any reports required by this Agreement have not been submitted to the Division or have been submitted with incorrect, incomplete or insufficient information; or,

d. The Sub-Recipient has failed to perform and complete on time any of its obligations under this Agreement.

(16) REMEDIES

If an Event of Default occurs, then the Division shall, after thirty (30) calendar days written notice to the Sub-Recipient and upon the Sub-Recipient's failure to cure within those thirty (30) days, exercise any one or more of the following remedies, either concurrently or consecutively:

a. Terminate this Agreement, provided that the Sub-Recipient is given at least thirty (30) days prior written notice of the termination. The notice shall be effective when placed in the United States, first class mail, postage prepaid, by registered or certified mail-return receipt requested, to the address in paragraph (3) herein;

b. Begin an appropriate legal or equitable action to enforce performance of this Agreement;

c. Withhold or suspend payment of all or any part of a request for payment;

d. Require that the Sub-Recipient refund to the Division any monies used for ineligible purposes under the laws, rules and regulations governing the use of these funds.

e. Exercise any corrective or remedial actions, to include but not be limited to:

i. Request additional information from the Sub-Recipient to determine the reasons for or the extent of non-compliance or lack of performance,

ii. Issue a written warning to advise that more serious measures may be taken if the situation is not corrected,

iii. Advise the Sub-Recipient to suspend, discontinue or refrain from incurring costs for any activities in question or

iv. Require the Sub-Recipient to reimburse the Division for the amount of costs incurred for any items determined to be ineligible;

f. Exercise any other rights or remedies which may be available under law.

Pursuing any of the above remedies will not stop the Division from pursuing any other remedies in this Agreement or provided at law or in equity. If the Division waives any right or remedy in this Agreement or fails to insist on strict performance by the Sub-Recipient, it will not affect, extend or waive any other right or remedy of the Division, or affect the later exercise of the same right or remedy by the Division for any other default by the Sub-Recipient.

(17) TERMINATION

a. The Division may terminate this Agreement for cause after thirty (30) days written notice. Cause can include misuse of funds, fraud, lack of compliance with applicable rules, laws and regulations, failure to perform on time, and refusal by the Sub-Recipient to permit public access to any document, paper, letter, or other material subject to disclosure under chapter 119, Florida Statutes, as amended.

b. The Division may terminate this Agreement for convenience or when it determines, in its sole discretion that continuing the Agreement would not produce beneficial results in line with the further expenditure of funds, by providing the Sub-Recipient with thirty (30) calendar day's prior written notice.

c. The parties may agree to terminate this Agreement for their mutual convenience through a written amendment of this Agreement. The amendment will state the effective date of the termination and the procedures for proper closeout of the Agreement.

d. In the event that this Agreement is terminated, the Sub-Recipient will not incur new obligations for the terminated portion of the Agreement after the Sub-Recipient has received the notification of termination. The Sub-Recipient will cancel as many outstanding obligations as possible. Costs incurred after receipt of the termination notice will be disallowed. The Sub-Recipient shall not be relieved of liability to the Division because of any breach of Agreement by the Sub-Recipient. The

Division may, to the extent authorized by law, withhold payments to the Sub-Recipient for the purpose of set-off until the exact amount of damages due the Division from the Sub-Recipient is determined.

(18) PROCUREMENT

a. The Sub-Recipient shall ensure that any procurement involving funds authorized by the Agreement complies with all applicable federal and state laws and regulations, to include 2 C.F.R. §§200.318 through 200.327 as well as Appendix II to 2 C.F.R. Part 200 (entitled “Contract Provisions for Non-Federal Entity Contracts Under Federal Awards”).

b. As required by 2 C.F.R. §200.318(i), the Sub-Recipient shall “maintain records sufficient to detail the history of procurement. These records will include, but are not necessarily limited to the following: rationale for the method of procurement, selection of contract type, contractor selection or rejection, and the basis for the contract price.”

c. As required by 2 C.F.R. §200.318(b), the Sub-Recipient shall “maintain oversight to ensure that contractors perform in accordance with the terms, conditions, and specifications of their contracts or purchase orders.” In order to demonstrate compliance with this requirement, the Sub-Recipient shall document, in its quarterly report to the Division, the progress of any and all subcontractors performing work under this Agreement.

d. The Sub-Recipient agrees to include in the subcontract that (i) the subcontractor is bound by the terms of this Agreement, (ii) the subcontractor is bound by all applicable state and federal laws and regulations, and (iii) the subcontractor shall hold the Division and Sub-Recipient harmless against all claims of whatever nature arising out of the subcontractor's performance of work under this Agreement, to the extent allowed and required by law.

e. As required by 2 C.F.R. §200.318(c)(1), the Sub-Recipient shall “maintain written standards of conduct covering conflicts of interest and governing the actions of its employees engaged in the selection, award and administration of contracts.”

f. As required by 2 C.F.R. §200.319(a), the Sub-Recipient shall conduct any procurement under this agreement “in a manner providing full and open competition.” Accordingly, the Sub-Recipient shall not:

i. Place unreasonable requirements on firms in order for them to qualify to do business;

ii. Require unnecessary experience or excessive bonding;

iii. Use noncompetitive pricing practices between firms or between affiliated companies;

iv. Execute noncompetitive contracts to consultants that are on retainer contracts;

v. Authorize, condone, or ignore organizational conflicts of interest;

vi. Specify only a brand name product without allowing vendors to offer an equivalent;

vii. Specify a brand name product instead of describing the performance, specifications, or other relevant requirements that pertain to the commodity or service solicited by the procurement;

viii. Engage in any arbitrary action during the procurement process; or,

ix. Allow a vendor to bid on a contract if that bidder was involved with developing or drafting the specifications, requirements, statement of work, invitation to bid, or request for proposals.

g. “Except in those cases where applicable Federal statutes expressly mandate or encourage” otherwise, the Sub-Recipient, as required by 2 C.F.R. §200.319(c), shall not use a geographic preference when procuring commodities or services under this Agreement.

h. The Sub-Recipient shall conduct any procurement involving invitations to bid (i.e. sealed bids) in accordance with 2 C.F.R. §200.320(d) as well as section 287.057(1)(a), Florida Statutes.

i. The Sub-Recipient shall conduct any procurement involving requests for proposals (i.e. competitive proposals) in accordance with 2 C.F.R. §200.320(2) as well as section 287.057(1)(b), Florida Statutes.

j. For each subcontract, the Sub-Recipient shall provide a written statement to the Division as to whether that subcontractor is a minority business enterprise, as defined in section 288.703, Florida Statutes. Additionally, the Sub-Recipient shall comply with the requirements of 2 C.F.R. §200.321 (“Contracting with small and minority businesses, women's business enterprises, and labor surplus area firms”).

k. If the Sub-Recipient chooses to subcontract any of the work required under this Agreement, then the Sub-Recipient shall review its competitive solicitation and subsequent contract to be awarded for compliance with the procurement standards in 2 C.F.R. §§200.318 through 200.327 and required contract provisions in Appendix II to 2 C.F.R. Part 200. If the Sub-Recipient publishes a competitive solicitation or executes a contract that is not in compliance with the Federal procurement standards in 2 C.F.R. §§200.318 through 200.327 or the requirements of Appendix II to 2 C.F.R. Part 200, then the Sub-Recipient is on notice that the Division may:

i. Terminate this Agreement in accordance with the provisions outlined in paragraph (17) above; or,

ii. Refuse to reimburse the Sub-Recipient for any costs associated with that solicitation.

l. FEMA has developed helpful resources for subgrant recipients related to compliance with the Federal procurement standards in 2 C.F.R. §§200.318 through 200.327 and required contract

provisions in Appendix II to 2 C.F.R. Part 200. These resources are generally available at https://www.fema.gov/procurement-disaster-assistance-team.

(19) ATTACHMENTS

a. All attachments to this Agreement are incorporated as if set out fully.

b. In the event of any inconsistencies or conflict between the language of this Agreement and the attachments, the language of the attachments shall control, but only to the extent of the conflict or inconsistency.

c. This Agreement has the following attachments:

i. Exhibit 1 - Funding Sources
ii. Attachment A – Budget and Scope of Work
iii. Attachment B – Program Statutes and Regulations
iv. Attachment C – Statement of Assurances
v. Attachment D – Request for Advance or Reimbursement
vi. Attachment E – Justification of Advance Payment
vii. Attachment F – Quarterly Report Form
viii. Attachment G – Warranties and Representations
ix. Attachment H – Certification Regarding Debarment
x. Attachment I – Federal Funding Accountability and Transparency Act
xi. Attachment J – Mandatory Contract Provisions
xii. Attachment K – Certification Regarding Lobbying
xiii. Attachment L – Florida Accountability Contract Tracking System
xiv. Attachment M – Foreign Country of Concern Affidavit

(20) PAYMENTS

a. Any advance payment under this Agreement is subject to 2 C.F.R. §200.305 and, as applicable, section 216.181(16), Florida Statutes. All advances are required to be held in an interest-bearing account. If an advance payment is requested, the budget data on which the request is based and a justification statement shall be included in this Agreement as Attachment E. Attachment E will specify the amount of advance payment needed and provide an explanation of the necessity for and proposed use of these funds. No advance shall be accepted for processing if a reimbursement has been paid prior to the submittal of a request for advanced payment. After the initial advance, if any, payment shall be made on a reimbursement basis as needed.

b. Invoices shall be submitted at least quarterly and shall include the supporting documentation for all costs of the project or services. The final invoice shall be submitted within sixty (60) days after the expiration date of the agreement. An explanation of any circumstances prohibiting the submittal of quarterly invoices shall be submitted to the Division grant manager as part of the Sub-Recipient's quarterly reporting as referenced in Paragraph (12) of this Agreement.

c. If the necessary funds are not available to fund this Agreement as a result of action by the United States Congress, the federal Office of Management and Budgeting, the State Chief Financial Officer or under subparagraph (9)b. of this Agreement, all obligations on the part of the Division to make any further payment of funds shall terminate, and the Sub-Recipient shall submit its closeout report within thirty (30) days of receiving notice from the Division.

(21) REPAYMENTS

a. All refunds or repayments due to the Division under this Agreement are to be made payable to the order of "Division of Emergency Management", and mailed directly to the following address:

Division of Emergency Management
Cashier
2555 Shumard Oak Boulevard
Tallahassee FL 32399-2100

b. In accordance with section 215.34(2), Florida Statutes, if a check or other draft is returned to the Division for collection, Sub-Recipient shall pay the Division a service fee of $15.00 or 5% of the face amount of the returned check or draft, whichever is greater.

(22) MANDATED CONDITIONS

a. The validity of this Agreement is subject to the truth and accuracy of all the information, representations, and materials submitted or provided by the Sub-Recipient in this Agreement, in any later submission or response to a Division request, or in any submission or response to fulfill the requirements of this Agreement. All of said information, representations, and materials are incorporated by reference. The inaccuracy of the submissions or any material changes shall, at the option of the Division and with thirty (30) days written notice to the Sub-Recipient, cause the termination of this Agreement and the release of the Division from all its obligations to the Sub-Recipient.

b. This Agreement shall be construed under the laws of the State of Florida, and venue for any actions arising out of this Agreement shall be in the Circuit Court of Leon County. If any provision of this Agreement is in conflict with any applicable statute or rule, or is unenforceable, then the provision shall be null and void to the extent of the conflict, and shall be severable, but shall not invalidate any other provision of this Agreement.

c. Any power of approval or disapproval granted to the Division under the terms of this Agreement shall survive the term of this Agreement.

d. The Sub-Recipient agrees to comply with the Americans With Disabilities Act (Public Law 101-336, 42 U.S.C. Section 12101 et seq.), which prohibits discrimination by public and private entities on the basis of disability in employment, public accommodations, transportation, State and local government services, and telecommunications.

e. Those who have been placed on the convicted vendor list following a conviction for a public entity crime or on the discriminatory vendor list may not submit a bid on a contract to provide any goods or services to a public entity, may not submit a bid on a contract with a public entity for the construction or repair of a public building or public work, may not submit bids on leases of real property to a public entity, may not be awarded or perform work as a contractor, supplier, subcontractor, or consultant under a contract with a public entity, and may not transact business with any public entity in excess of $25,000.00 for a period of 36 months from the date of being placed on the convicted vendor list or on the discriminatory vendor list.

f. Any Sub-Recipient which is not a local government or state agency, and which receives funds under this Agreement from the federal government, certifies, to the best of its knowledge and belief, that it and its principals or affiliates:

i. Are not presently debarred, suspended, proposed for debarment, declared ineligible, voluntarily excluded or disqualified from covered transactions by a federal department or agency;

ii. Have not, within a five-year period preceding this proposal been convicted of or had a civil judgment rendered against them for fraud or a criminal offense in connection with obtaining, attempting to obtain, or performing a public (federal, state or local) transaction or contract under public transaction; violation of federal or state antitrust statutes or commission of embezzlement, theft, forgery, bribery, falsification or destruction of records, making false statements, or receiving stolen property;

iii. Are not presently indicted or otherwise criminally or civilly charged by a governmental entity (federal, state or local) with commission of any offenses enumerated in paragraph (22) f. ii. of this certification; and,

iv. Have not within a five-year period preceding this Agreement had one or more public transactions (federal, state or local) terminated for cause or default.

g. **In addition, the Sub-Recipient shall send to the Division (by email or by facsimile transmission) the completed "Certification Regarding Debarment, Suspension, Ineligibility And Voluntary Exclusion" (Attachment H) for each intended subcontractor which Sub-Recipient plans to fund under this Agreement. The form must be received by the Division before the Sub-Recipient enters into a contract with any subcontractor.**

h. The Division reserves the right to unilaterally cancel this Agreement if the Sub-Recipient refuses to allow public access to all documents, papers, letters or other material subject to the provisions of chapter 119, Florida Statutes, which the Sub-Recipient created or received under this Agreement.

i. If the Sub-Recipient is allowed to temporarily invest any advances of funds under this Agreement, any interest income shall either be returned to the Division or be applied against the Division's obligation to pay the contract amount.

j. The State of Florida will not intentionally award publicly-funded contracts to any contractor who knowingly employs unauthorized alien workers, constituting a violation of the employment provisions contained in 8 U.S.C. Section 1324a(e) [Section 274A(e) of the Immigration and Nationality Act ("INA")]. The Division shall consider the employment by any contractor of unauthorized aliens a violation of Section 274A(e) of the INA. Such violation by the Sub-Recipient of the employment provisions contained in Section 274A(e) of the INA shall be grounds for unilateral cancellation of this Agreement by the Division.

k. Section 287.05805, Florida Statutes, requires that any state funds provided for the purchase of or improvements to real property are contingent upon the contractor or political subdivision granting to the state a security interest in the property at least to the amount of state funds provided for at least 5 years from the date of purchase or the completion of the improvements or as further required by law.

l. The Division may, at its option, terminate the Contract if the Contractor is found to have submitted a false certification as provided under section 287.135(5), Florida Statutes, or been placed on the Scrutinized Companies with Activities in Sudan List or the Scrutinized Companies with Activities in the Iran Petroleum Energy Sector List, or been engaged in business operations in Cuba or Syria, or to have been placed on the Scrutinized Companies that Boycott Israel List or is engaged in a boycott of Israel.

m. If applicable, pursuant to Section 255.0993, Florida Statutes, the Sub-Recipient shall ensure that any iron or steel product, as defined in Section 255.0993(1)(b), Florida Statutes, that is permanently incorporated in the deliverable(s) resulting from this project, must be produced in the United States.

(23) LOBBYING PROHIBITION

a. 2 C.F.R. §200.450 prohibits reimbursement for costs associated with certain lobbying activities.

b. Section 216.347, Florida Statutes, prohibits "any disbursement of grants and aids appropriations pursuant to a contract or grant to any person or organization unless the terms of the grant or contract prohibit the expenditure of funds for the purpose of lobbying the Legislature, the judicial branch, or a state agency."

c. No funds or other resources received from the Division under this Agreement may be used directly or indirectly to influence legislation or any other official action by the Florida Legislature or any state agency.

d. The Sub-Recipient certifies, by its signature to this Agreement, that to the best of his or her knowledge and belief:

i. No Federal appropriated funds have been paid or will be paid, by or on behalf of the Sub-Recipient, to any person for influencing or attempting to influence an officer or

employee of any agency, a Member of Congress, an officer or employee of Congress, or an employee of a Member of Congress in connection with the awarding of any Federal contract, the making of any Federal grant, the making of any Federal loan, the entering into of any cooperative agreement, and the extension, continuation, renewal, amendment or modification of any Federal contract, grant, loan or cooperative agreement.

ii. If any funds other than Federal appropriated funds have been paid or will be paid to any person for influencing or attempting to influence an officer or employee of any agency, a Member of Congress, an officer or employee of Congress, or an employee of a Member of Congress in connection with this Federal contract, grant, loan or cooperative agreement, the Sub-Recipient shall complete and submit Standard Form-LLL, "Disclosure of Lobbying Activities."

iii. The Sub-Recipient shall require that this certification be included in the award documents for all subawards (including subcontracts, subgrants, and contracts under grants, loans, and cooperative agreements) and that all Sub-Recipients shall certify and disclose.

iv. This certification is a material representation of fact upon which reliance was placed when this transaction was made or entered into. Submission of this certification is a prerequisite for making or entering into this transaction imposed by Section 1352, Title 31, U.S. Code. Any person who fails to file the required certification shall be subject to a civil penalty of not less than $10,000 and not more than $100,000 for each such failure.

(24) COPYRIGHT, PATENT AND TRADEMARK

EXCEPT AS PROVIDED BELOW, ANY AND ALL PATENT RIGHTS ACCRUING UNDER OR IN CONNECTION WITH THE PERFORMANCE OF THIS AGREEMENT ARE HEREBY RESERVED TO THE STATE OF FLORIDA; AND, ANY AND ALL COPYRIGHTS ACCRUING UNDER OR IN CONNECTION WITH THE PERFORMANCE OF THIS AGREEMENT ARE HEREBY TRANSFERRED BY THE SUB-RECIPIENT TO THE STATE OF FLORIDA.

a. If the Sub-Recipient has a pre-existing patent or copyright, the Sub-Recipient shall retain all rights and entitlements to that pre-existing patent or copyright unless the Agreement provides otherwise.

b. If any discovery or invention is developed in the course of or as a result of work or services performed under this Agreement, or in any way connected with it, the Sub-Recipient shall refer the discovery or invention to the Division for a determination whether the State of Florida will seek patent protection in its name. Any patent rights accruing under or in connection with the performance of this Agreement are reserved to the State of Florida. If any books, manuals, films, or other copyrightable material are produced, the Sub-Recipient shall notify the Division. Any copyrights accruing under or in connection with the performance under this Agreement are transferred by the Sub-Recipient to the State of Florida.

c. Within thirty (30) days of execution of this Agreement, the Sub-Recipient shall disclose all intellectual properties relating to the performance of this Agreement which he or she knows or should know could give rise to a patent or copyright. The Sub-Recipient shall retain all rights and entitlements to any pre-existing intellectual property which is disclosed. Failure to disclose will indicate that no such property exists. The Division shall then, under Paragraph (24) b., have the right to all patents and copyrights which accrue during performance of the Agreement.

d. If the Sub-Recipient qualifies as a state university under Florida law, then, pursuant to section 1004.23, Florida Statutes, any invention conceived exclusively by the employees of the Sub-Recipient shall become the sole property of the Sub-Recipient. In the case of joint inventions, that is inventions made jointly by one or more employees of both parties hereto, each party shall have an equal, undivided interest in and to such joint inventions. The Division shall retain a perpetual, irrevocable, fully-paid, nonexclusive license, for its use and the use of its contractors of any resulting patented, copyrighted or trademarked work products, developed solely by the Sub-Recipient, under this Agreement, for Florida government purposes.

(25) LEGAL AUTHORIZATION

The Sub-Recipient certifies that it has the legal authority to receive the funds under this Agreement and that its governing body has authorized the execution and acceptance of this Agreement. The Sub-Recipient also certifies that the undersigned person has the authority to legally execute and bind Sub-Recipient to the terms of this Agreement.

(26) EQUAL OPPORTUNITY EMPLOYMENT

a. In accordance with 41 C.F.R. §60-1.4(b), the Sub-Recipient hereby agrees that it will incorporate or cause to be incorporated into any contract for construction work, or modification thereof, as defined in the regulations of the Secretary of Labor at 41 C.F.R. Chapter 60, which is paid for in whole or in part with funds obtained from the Federal Government or borrowed on the credit of the Federal Government pursuant to a grant, contract, loan insurance, or guarantee, or undertaken pursuant to any Federal program involving such grant, contract, loan, insurance, or guarantee, the following equal opportunity clause:

> During the performance of this contract, the contractor agrees as follows:
>
> i. The contractor will not discriminate against any employee or applicant for employment because of race, color, religion, sex, sexual orientation, gender identity, or national origin. The contractor will take affirmative action to ensure that applicants are employed, and that employees are treated during employment without regard to their race, color, religion, sex, sexual orientation, gender identity, or national origin. Such action shall include, but not be limited to the following:

Employment, upgrading, demotion, or transfer; recruitment or recruitment advertising; layoff or termination; rates of pay or other forms of compensation; and selection for training, including apprenticeship. The contractor agrees to post in conspicuous places, available to employees and applicants for employment, notices to be provided setting forth the provisions of this nondiscrimination clause.

ii. The contractor will, in all solicitations or advertisements for employees placed by or on behalf of the contractor, state that all qualified applicants will receive considerations for employment without regard to race, color, religion, sex, sexual orientation, gender identity, or national origin.

iii. The contractor will not discharge or in any other manner discriminate against any employee or applicant for employment because such employee or applicant has inquired about, discussed, or disclosed the compensation of the employee or applicant or another employee or applicant. This provision shall not apply to instances in which an employee who has access to the compensation information of other employees or applicants as a part of such employee's essential job functions discloses the compensation of such other employees or applicants to individuals who do not otherwise have access to such information, unless such disclosure is in response to a formal complaint or charge, in furtherance of an investigation, proceeding, hearing, or action, including an investigation conducted by the employer, or is consistent with the contractor's legal duty to furnish information.

iv. The contractor will send to each labor union or representative of workers with which he has a collective bargaining agreement or other contract or understanding, a notice to be provided advising the said labor union or workers' representatives of the contractor's commitments under this section, and shall post copies of the notice in conspicuous places available to employees and applicants for employment.

v. The contractor will comply with all provisions of Executive Order 11246 of September 24, 1965, and of the rules, regulations, and relevant orders of the Secretary of Labor.

vi. The contractor will furnish all information and reports required by Executive Order 11246 of September 24, 1965, and by rules, regulations, and orders of the Secretary of Labor, or pursuant thereto, and will permit access to his books, records, and accounts by the administering agency and the Secretary of Labor for purposes of investigation to ascertain compliance with such rules, regulations, and orders.

vii. In the event of the contractor's noncompliance with the nondiscrimination clauses of this contract or with any of the said rules, regulations, or orders, this contract may be canceled, terminated, or suspended in whole or in part and the contractor may be declared ineligible for further Government contracts or federally assisted construction contracts in accordance with procedures authorized in Executive Order 11246 of September 24, 1965, and such other sanctions may be imposed and remedies invoked as provided in Executive Order

11246 of September 24, 1965, or by rule, regulation, or order of the Secretary of Labor, or as otherwise provided by law.

viii. The contractor will include the portion of the sentence immediately preceding paragraph (1) and the provisions of paragraphs (1) through (8) in every subcontract or purchase order unless exempted by rules, regulations, or orders of the Secretary of Labor issued pursuant to section 204 of Executive Order 11246 of September 24, 1965, so that such provisions will be binding upon each subcontractor or vendor. The contractor will take such action with respect to any subcontract or purchase order as the administering agency may direct as a means of enforcing such provisions, including sanctions for noncompliance:

Provided, however, that in the event a contractor becomes involved in, or is threatened with, litigation with a subcontractor or vendor as a result of such direction by the administering agency the contractor may request the United States to enter into such litigation to protect the interests of the United States.

b. The Sub-Recipient further agrees that it will be bound by the above equal opportunity clause with respect to its own employment practices when it participates in federally assisted construction work: *Provided*, that if the applicant so participating is a State or local government, the above equal opportunity clause is not applicable to any agency, instrumentality or subdivision of such government which does not participate in work on or under the contract.

c. The Sub-Recipient agrees that it will assist and cooperate actively with the administering agency and the Secretary of Labor in obtaining the compliance of contractors and subcontractors with the equal opportunity clause and the rules, regulations, and relevant orders of the Secretary of Labor, that it will furnish the administering agency and the Secretary of Labor such information as they may require for the supervision of such compliance, and that it will otherwise assist the administering agency in the discharge of the agency's primary responsibility for securing compliance.

d. The Sub-Recipient further agrees that it will refrain from entering into any contract or contract modification subject to Executive Order 11246 of September 24, 1965, with a contractor debarred from, or who has not demonstrated eligibility for, Government contracts and federally assisted construction contracts pursuant to the Executive order and will carry out such sanctions and penalties for violation of the equal opportunity clause as may be imposed upon contractors and subcontractors by the administering agency or the Secretary of Labor pursuant to Part II, Subpart D of the Executive order. In addition, the Sub-Recipient agrees that if it fails or refuses to comply with these undertakings, the administering agency may take any or all of the following actions: cancel, terminate, or suspend in whole or in part this grant (contract, loan, insurance, guarantee); refrain from extending any further assistance to the Sub-Recipient under the program with respect to which the failure or refund occurred until satisfactory assurance of future compliance has been received from such Sub-Recipient; and refer the case to the Department of Justice for appropriate legal proceedings.

(27) COPELAND ANTI-KICKBACK ACT

The Sub-Recipient hereby agrees that, unless exempt under Federal law, it will incorporate or cause to be incorporated into any contract for construction work, or modification thereof, the following clause:

> i. Contractor. The contractor shall comply with 18 U.S.C. § 874, 40 U.S.C. § 3145, and the requirements of 29 C.F.R. pt. 3 as may be applicable, which are incorporated by reference into this contract.
>
> ii. Subcontracts. The contractor or subcontractor shall insert in any subcontracts the clause above and such other clauses as the FEMA may by appropriate instructions require, and also a clause requiring the subcontractors to include these clauses in any lower tier subcontracts. The prime contractor shall be responsible for the compliance by any subcontractor or lower tier subcontractor with all of these contract clauses.
>
> iii. Breach. A breach of the contract clauses above may be grounds for termination of the contract, and for debarment as a contractor and subcontractor as provided in 29 C.F.R. § 5.12.

(28) CONTRACT WORK HOURS AND SAFETY STANDARDS

If the Sub-Recipient, with the funds authorized by this Agreement, enters into a contract that exceeds $100,000 and involves the employment of mechanics or laborers, then any such contract must include a provision for compliance with 40 U.S.C. 3702 and 3704, as supplemented by Department of Labor regulations (29 C.F.R. Part 5). Under 40 U.S.C. 3702 of the Act, each contractor must be required to compute the wages of every mechanic and laborer on the basis of a standard work week of 40 hours. Work in excess of the standard work week is permissible provided that the worker is compensated at a rate of not less than one and a half times the basic rate of pay for all hours worked in excess of 40 hours in the work week. The requirements of 40 U.S.C. 3704 are applicable to construction work and provide that no laborer or mechanic must be required to work in surroundings or under working conditions which are unsanitary, hazardous or dangerous. These requirements do not apply to the purchases of supplies or materials or articles ordinarily available on the open market, or contracts for transportation.

(29) CLEAN AIR ACT AND THE FEDERAL WATER POLLUTION CONTROL ACT

If the Sub-Recipient, with the funds authorized by this Agreement, enters into a contract that exceeds $150,000, then any such contract must include the following provision:

> Contractor agrees to comply with all applicable standards, orders or regulations issued pursuant to the Clean Air Act (42 U.S.C. 7401-7671q) and the Federal Water Pollution Control Act as amended (33 U.S.C. 1251-1387), and will report violations to FEMA and the Regional Office of the Environmental Protection Agency (EPA).

(30) SUSPENSION AND DEBARMENT

If the Sub-Recipient, with the funds authorized by this Agreement, enters into a contract, then any such contract must include the following provisions:

i. This contract is a covered transaction for purposes of 2 C.F.R. pt. 180 and 2 C.F.R. pt. 3000. As such the contractor is required to verify that none of the contractor, its principals (defined at 2 C.F.R. § 180.995), or its affiliates (defined at 2 C.F.R. § 180.905) are excluded (defined at 2 C.F.R. § 180.940) or disqualified (defined at 2 C.F.R. § 180.935).

ii. The contractor must comply with 2 C.F.R. pt. 180, subpart C and 2 C.F.R. pt. 3000, subpart C and must include a requirement to comply with these regulations in any lower tier covered transaction it enters into.

iii. This certification is a material representation of fact relied upon by the Division. If it is later determined that the contractor did not comply with 2 C.F.R. pt. 180, subpart C and 2 C.F.R. pt. 3000, subpart C, in addition to remedies available to the Division, the Federal Government may pursue available remedies, including but not limited to suspension and/or debarment.

iv. The bidder or proposer agrees to comply with the requirements of 2 C.F.R. pt. 180, subpart C and 2 C.F.R. pt. 3000, subpart C while this offer is valid and throughout the period of any contract that may arise from this offer. The bidder or proposer further agrees to include a provision requiring such compliance in its lower tier covered transactions.

(31) BYRD ANTI-LOBBYING AMENDMENT

If the Sub-Recipient, with the funds authorized by this Agreement, enters into a contract, then any such contract must include the following clause:

Byrd Anti-Lobbying Amendment, 31 U.S.C. § 1352 (as amended). Contractors who apply or bid for an award of $100,000 or more shall file the required certification. Each tier certifies to the tier above that it will not and has not used Federal appropriated funds to pay any person or organization for influencing or attempting to influence an officer or employee of any agency, a member of Congress, officer or employee of Congress, or an employee of a member of Congress in connection with obtaining any Federal contract, grant, or any other award covered by 31 U.S.C. § 1352. Each tier shall also disclose any lobbying with non-Federal funds that takes place in connection with obtaining any Federal award. Such disclosures are forwarded from tier to tier up to the recipient.

If this subgrant agreement amount is $100,000 or more, the Sub-Recipient, and subcontractors as applicable, shall sign Attachment K – Certification Regarding Lobbying.

(32) CONTRACTING WITH SMALL AND MINORITY BUSINESSES, WOMEN'S BUSINESS ENTERPRISES, AND LABOR SURPLUS AREA FIRMS

a. If the Sub-Recipient, with the funds authorized by this Agreement, seeks to procure goods or services, then, in accordance with 2 C.F.R. §200.321, the Sub-Recipient shall take the following

affirmative steps to assure that minority businesses, women's business enterprises, and labor surplus area firms are used whenever possible:

i. Placing qualified small and minority businesses and women's business enterprises on solicitation lists;

ii. Assuring that small and minority businesses, and women's business enterprises are solicited whenever they are potential sources;

iii. Dividing total requirements, when economically feasible, into smaller tasks or quantities to permit maximum participation by small and minority businesses, and women's business enterprises;

iv. Establishing delivery schedules, where the requirement permits, which encourage participation by small and minority businesses, and women's business enterprises;

v. Using the services and assistance, as appropriate, of such organizations as the Small Business Administration and the Minority Business Development Agency of the Department of Commerce; and

vi. Requiring the prime contractor, if subcontracts are to be let, to take the affirmative steps listed in paragraphs i. through v. of this subparagraph.

b. The requirement outlined in subparagraph a. above, sometimes referred to as "socioeconomic contracting," does not impose an obligation to set aside either the solicitation or award of a contract to these types of firms. Rather, the requirement only imposes an obligation to carry out and document the six affirmative steps identified above.

c. The "socioeconomic contracting" requirement outlines the affirmative steps that the Sub-Recipient must take; the requirements do not preclude the Sub-Recipient from undertaking additional steps to involve small and minority businesses and women's business enterprises.

d. The requirement to divide total requirements, when economically feasible, into smaller tasks or quantities to permit maximum participation by small and minority businesses, and women's business enterprises, does not authorize the Sub-Recipient to break a single project down into smaller components in order to circumvent the micro-purchase or small purchase thresholds so as to utilize streamlined acquisition procedures (e.g. "project splitting").

(33) ASSURANCES

The Sub-Recipient shall comply with any Statement of Assurances incorporated as Attachment C.

IN WITNESS WHEREOF, the parties hereto have executed this Agreement.

SUB-RECIPIENT: CITY OF TARPON SPRINGS

By: _____

Name and Title: _____

Date: _____

FEID#: _____

STATE OF FLORIDA
DIVISION OF EMERGENCY MANAGEMENT

By: _____

Name and Title: Kevin Guthrie, Director

Date:_____

EXHIBIT – 1

THE FOLLOWING FEDERAL RESOURCES ARE AWARDED TO THE SUB-RECIPIENT UNDER THIS AGREEMENT:

Federal Program
Federal agency: **Federal Emergency Management Agency: Hazard Mitigation Grant**
Catalog of Federal Domestic Assistance title and number: **97.039**
Award amount: **$31,718.71**

THE FOLLOWING COMPLIANCE REQUIREMENTS APPLY TO THE FEDERAL RESOURCES AWARDED UNDER THIS AGREEMENT:

- 2 C.F.R. Part 200 Uniform Administrative Requirements, Cost Principles, and Audit Requirements for Federal Awards
- The Robert T. Stafford Disaster Relief and Emergency Assistance Act, Public Law 93-288, as amended, 42 U.S.C. 5121 et seq., and Related Authorities
- Sections 1361(A) of the National Flood Insurance Act of 1968, 42 U.S.C. 4104c, as amended by the National Flood Insurance Reform Act of 1994, Public Law 103-325 and the Bunning-Bereuter-Blumenauer Flood Insurance Reform Act of 2004, Public Law 108-264
- 31 C.F.R. Part 205 Rules and Procedures for Funds Transfers

Federal Program:

1. Sub-Recipient is to use funding to perform the following eligible activities:
   - Localized Minor Drainage Improvement
2. Sub-Recipient is subject to all administrative and financial requirements as set forth in this Agreement, or will be in violation of the terms of the Agreement.

Attachment A

Budget and Scope of Work

STATEMENT OF PURPOSE:

The purpose of this Scope of Work is flood risk reduction to the Sponge Docks area in Tarpon Springs, Pinellas County, Florida, funded through the Hazard Mitigation Grant Program (HMGP) **DR-4734-077-R**, as approved by the Florida Division of Emergency Management (Division) and the Federal Emergency Management Agency (FEMA).

The Sub-Recipient, City of Tarpon Springs, shall conduct Phase I of this project, which includes the preliminary engineering designs and calculations, surveys, permitting, and notices. No construction activities are approved at this time. The Sub-Recipient shall complete the Phase I work in accordance with all applicable federal, state and local laws, regulations and codes.

PROJECT OVERVIEW:

As a Hazard Mitigation Grant Program project, the Sub-Recipient proposes flood risk reduction improvements from the intersection of Cross Street and Athens Street westward to the intersection of Dodecanese Boulevard and Arfaras Street to mitigate flooding in the Sponge Docks area, located in Tarpon Springs, Florida 34689.

The scope of work is for Phase I only, which includes but is not limited to surveying, engineering, design, plans preparation, permitting and bidding for the proposed project, for Phase II approval. No construction activities for this project have been approved.

When completed, the Sub-Recipient shall provide deliverables for Phase II review of the following proposed activities.

The Phase II proposed scope of work shall provide protection by improving the Sponge Docks area's existing stormwater system's capacity and conveyance by constructing additional drainage components that help collect, convey, and filter stormwater before depositing offsite to the Anclote River. The improvements include sixteen (16) new stormwater collection inlets and one thousand two hundred and one linear feet (1,201 lf) of pipe culvert ranging in size between fifteen inches (15") to forty-eight inches (48") along Athens Street and Dodecanese Boulevard, a stormwater pump station near the Dodecanese Boulevard and Athens Street intersection consisting of a lift station and three (3) stormwater pumps each capable of reaching a flow rate of one hundred and twenty thousand gallons per minute (120,000 gpm), and thirty-six inch (36") discharge pipe leading to an existing seawall outfall. This project shall address the lack of collection capacity and conveyance of stormwater in the Sponge Docks area that has caused commercial properties to experience repetitive flooding during storm events.

The project shall be designed to provide protection against a 100-year storm event. Activities shall be completed in strict compliance with Federal, State and Local applicable Rules and Regulations.

Project Locations:

ID#	Name/Station	Location	Coordinates
1)	City of Tarpon Springs, 34689	1. S Point (Athens St) 2. W Point (Cross St & Athens St) 3. NW Point (Dodecanese Blvd & Athens St) 4. E Point (Dodecanese Blvd & Arfaras St)	1. (28.154343, -82.760259) 2. (28.154788, -82.760580) 3. (28.155573, -82.760180) 4. (28.155356, -82.756980)

TASKS & DELIVERABLES:

A) Tasks:

1) The Sub-Recipient shall procure the services of a qualified and licensed Florida contractor and execute a contract with the selected bidder to complete the Phase I scope of work as approved by the Division and FEMA. The Sub-Recipient shall select the qualified, licensed Florida contractor in accordance with the Sub-Recipient's procurement policy as well as all federal and state laws and regulations.

   All procurement activities shall contain sufficient source documentation and be in accordance with all applicable regulations.

   The Sub-Recipient and contractor shall be responsible for maintaining a safe and secure worksite for the duration of the work. The contractor shall maintain all areas in a neat and presentable condition.

   The Sub-Recipient shall ensure that no contractors or subcontractors are debarred or suspended from participating in federally funded projects.

   The selected contractor shall have a current and valid occupational license/business tax receipt issued for the type of services being performed. The Sub-Recipient shall provide documentation demonstrating the results of the procurement process. This shall include a rationale for the method of procurement and selection of contract type, contractor selection and/or rejection and bid tabulation and listing, and the basis of contract price.

   The Sub-Recipient shall provide an executed "Debarment, Suspension, Ineligibility, Voluntary Exclusion Form" for each contractor and/or subcontractor performing services under this agreement.

   Executed contracts with contractors and/or subcontractors shall be provided to the Division by the Sub-Recipient.

   The Sub-Recipient shall provide copies of professional licenses for contractors selected to perform services. The Sub-Recipient shall provide a copy of a current and valid occupational license or business tax receipt issued for the type of services to be performed by the selected contractor.

2) The Sub-Recipient shall monitor and manage the Phase I portion of this project in accordance with the Hazard Mitigation Grant Program application and supporting documentation as submitted to the Division and subsequently approved by the Division and FEMA. The Division and FEMA shall render a Phase II determination upon completion of the review of Phase I deliverables. No construction activities are approved at this time. The Sub-Recipient shall ensure that all applicable state, local and federal laws and regulations are followed and documented, as appropriate.

   Phase I consists of fees; for conducting survey, flood risk reduction study, engineering, design, public notices, and/or permitting associated with the modification(s) needed to upgrade the flood risk reduction. Verification of upstream and downstream impacts shall be necessary for determining project eligibility.

   All Phase I work shall be completed in accordance with all applicable state, local and federal laws and regulations and documented, as appropriate.

   Upon completion of Task 2, the Sub-Recipient shall submit the following documents with sufficient supporting documentation and provide a summary of all scope of work changes, if any.

   a) Two sets of engineering Signed/Sealed final design and analysis, surveying, and Hydrologic and Hydraulic (H&H) Studies.

   b) Construction Plans / bid documents.

   c) Revised cost estimate for Phase II – construction (include Phase I costs), to implement the design project.

   d) Design documents shall provide a detailed description which includes specifics on project scope of work, depth and extent of ground disturbance at all construction locations of the project.

   e) Color maps including topographical, aerial, and ground disturbance.

f) General description of the type of construction equipment that may be used during the proposed project's implementation and what activities it will facilitate.

g) Color photographs of the project area and areas of ground disturbance.

h) Copy of all environmental permits or applications; any obtained from the Florida Department of Environmental Protection (FDEP), and/or local Water Management District (WMD) shall be required. Any conditions for compliance shall be included in the final design plans, narrative and project implementation actions.

i) Copy of the United States Army Corps of Engineers (USACE) or FDEP Section 404 permit or No Permit Required notification from the appropriate permitting agency.

j) Copy of the floodplain permit or notification of No Permit Required from the local floodplain administrator.

k) A letter from the professional of record stating if the project will have any upstream or downstream impacts.

l) Any other documentation requested by the Division, not limited to Project Conditions and Requirements herein.

3) During the course of this agreement, the Sub-Recipient shall submit requests for reimbursement. Adequate and complete source documentation shall be submitted to support all costs (federal share and local share) related to the project. In some cases, all project activities may not be fully complete prior to requesting reimbursement of costs incurred in completion of this scope of work; however, a partial reimbursement may be requested.

The Sub-Recipient shall submit an Affidavit signed by the Sub-Recipient's project personnel with each reimbursement request attesting to the completion of the work, that disbursements or payments were made in accordance with all agreement and regulatory conditions, and that reimbursement is due and has not been previously requested.

The Sub-Recipient shall maintain accurate time records. The Sub-Recipient shall ensure invoices are accurate and any contracted services were rendered within the terms and timelines of this agreement. All supporting documentation shall agree with the requested billing period. All costs submitted for reimbursement shall contain adequate source documentation which may include but not be limited to: cancelled checks, bank statements, Electronic Funds Transfer, paid bills and invoices, payrolls, time and attendance records, contract and subcontract award documents.

Direct Expenses: The Sub-Recipient shall pre-audit bills, invoices, and/or charges submitted by the contractors and subcontractors and pay the contractors and subcontractors for approved bills, invoices, and/or charges. Sub-Recipient shall ensure that all contractor/subcontractor bills, invoices, and/or charges are legitimate and clearly identify the activities being performed and associated costs.

Sub-Recipient Management Costs (SRMC) expenditure must adhere to FEMA Policy #104-11-1 HMGP Management Costs (Interim) signed November 14, 2018. FEMA defines management costs as any: Indirect costs, Direct administrative costs, and other administrative expenses associated with a specific project. Administrative costs are expenses incurred by a Sub-Recipient in managing and administering the federal award to ensure that federal, state requirements are met including: solicitation, development, review, and processing of sub-applications; delivery of technical assistance; quarterly progress and fiscal reporting; project monitoring; technical monitoring; compliance activities associated with federal procurement requirements; documentation of quality of work verification for quarterly reports and closeout; payment of claims; closeout review and liquidation; and records retention.

Any activities that are directly related to a project are not eligible under management costs. For example, architectural, engineering, and design services are project costs and cannot be included under management costs. Similarly, construction management activities that manage, coordinate, and

supervise the construction process from project scoping to project completion are project costs. These activities cannot be included under management costs.

Due to Strategic Funds Management (SFM), SRMC Interim Policy requires management costs to be obligated in increments sufficient to cover Sub-Recipient needs, for no more than one year, unless contractual agreements require additional funding. FEMA has established a threshold where annual increments will be applied to larger awards allowing smaller awards to be fully obligated. Obligations will be handled by the size of the total subaward.

The Sub-Recipient shall pre-audit all SRMC source documentation – personnel, fringe benefits, travel, equipment, supplies, contractual, and indirect costs. A brief narrative is required to identify what the funds will be used for. Documentation shall be detailed and clearly describe each approved task performed, hours devoted to each task, and the hourly rate charged including enough information to calculate the hourly rates based on payroll records. Employee benefits and tasks shall be clearly shown on the Personnel Activity Form, and all Personnel or Contractual SRMC shall be invoiced separate from all other project costs.

Project Management Expenses (only applies to disasters prior to August 1, 2017, all others adhere to FEMA Policy #104-11-1 for SRMC): The Sub-Recipient shall pre-audit source documentation such as payroll records, project time sheets, attendance logs, etc. Documentation shall be detailed information describing tasks performed, hours devoted to each task, and the hourly rate charged for each hour including enough information to calculate the hourly rates based on payroll records. Employee benefits shall be clearly shown.

The Division shall review all submitted requests for reimbursement for basic accuracy of information. Further, the Division shall ensure that no unauthorized work was completed prior to the approved project start date by verifying vendor and contractor invoices. The Division shall verify that reported costs were incurred in the performance of eligible work, that the approved work was completed, and that the mitigation measures are in compliance with the approved scope of work prior to processing any requests for reimbursement.

Review and approval of any third-party in-kind services, if applicable, shall be conducted by the Division in coordination with the Sub-Recipient.

Quarterly reports shall be submitted by the Sub-Recipient and received by the Division at the times provided in this agreement prior to the processing of any reimbursement.

The Sub-Recipient shall submit to the Division requests for reimbursement of actual Phase I costs related to the project as identified in the project application and this scope of work. The Requests for Reimbursement (RFR) shall include:

a) Contractor, subcontractor, and/or vendor invoices which clearly display dates of services performed, description of services performed, location of services performed, cost of services performed, name of service provider and any other pertinent information;

b) Proof of payment from the Sub-Recipient to the contractor, subcontractor, and/or vendor for invoiced services;

c) Clear identification of amount of costs being requested for reimbursement as well as costs being applied against the local match amount.

The Sub-Recipient's Request for Reimbursement shall include the final Phase I project cost. Supporting documentation shall show that all contractors and subcontractors have been paid.

B) Deliverables:

Mitigation Activities consist of Phase I activities, which include engineering, designing, plans preparation, permitting and bidding for the proposed project, for Phase II review and approval, to implement measures for flood risk reduction in the Sponge Docks area in Tarpon Springs, Florida 34689.

The project shall be designed to provide protection against a 100-year storm event. Activities shall be completed in strict compliance with Federal, State and Local applicable Rules and Regulations.

Provided the Sub-Recipient performs in accordance with the Scope of Work outlined in this Agreement, the Division shall reimburse the Sub-Recipient based on the percentage of overall project completion.

PROJECT CONDITIONS AND REQUIREMENTS:

C) Engineering:

1) The Sub-Recipient shall submit signed and sealed Engineering plans that clearly show the engineer's estimate of the pre and post-mitigation effects of the proposed project and the relationship of the damages to be mitigated (commensurate with the level of funding requested). The H&H study shall contain at least 3 scenarios, where one represents the level of protection; under each scenario, the Sub-Recipient must identify the losses before and after mitigation (structural, content, displacement, road closure duration, or any other needed to show the improvements after the mitigation project is implemented). This includes, but is not limited to, the existing and proposed hydrology and hydraulics for the level of event being mitigated.
2) Demonstrate mitigation effectiveness, in part, by showing the physical location(s) and elevation(s) of the infrastructure/structures that are being damaged and FEMA Special Flood Hazard Areas on the same plan.
3) Submit a refined cost estimate, to include final Phase I Fees and Phase II Construction Materials and Labor.

D) Environmental:

1) Any change to the approved scope of work shall require re-evaluation for compliance with NEPA and other Laws and Executive Orders.
2) Acceptance of federal funding requires the Sub-Recipient to comply with all federal, state, and local laws. Failure to obtain all appropriate federal, state, and local environmental permits and clearances may jeopardize federal funding.
3) Meet all required Environmental laws and policies, and all necessary Environmental compliance documents shall be obtained as applicable.
    a) Consultation with the United States Army Corps of Engineers (USACE) or the Florida Department of Environmental Protection (FDEP) is required. A Section 404 permit or No Permit Required notification from the permitting agency shall be submitted.
    b) Copy of all environmental permits or applications; any obtained from the Florida Department of Environmental Protection (FDEP), and/or local Water Management District (WMD) shall be submitted. Any conditions for compliance shall be included in the final design plans, narrative, and project implementation actions.
    c) Copy of the local floodplain permit or No Permit Required notification from the local floodplain administrator.
4) National Historical Preservation Act compliance documents shall be obtained. Review documentation required:

a) Color maps including topographical and aerial with the project location clearly marked.

b) Color photographs of any area with ground disturbance (electronic).

c) Indicate if project site is located within a designated historic district or historic neighborhood.

d) Color ground disturbance maps showing the full extent of the project footprint and depth of ground disturbance. Geographic latitude/longitude (decimal degree format) of the proposed construction areas and staging areas. The total impacted area should also be indicated on the map.

e) General description of the type of construction equipment that may be used during the proposed project's implementation and what activities it will facilitate.

f) Previous and current use of proposed project area.

g) Any known site work or historic uses for the proposed location.

h) Any available studies that may have taken place on the property.

5) Phase I of this project is approved with the condition that the above list of deliverables shall be submitted for review and approval by the Division and FEMA before Phase II is considered.

6) No construction work may begin until Phase II is approved by the Division and FEMA.

E) <u>Programmatic:</u>

1) A change in the scope of work *must* be approved by the Division and FEMA in advance regardless of the budget implications.

2) The Sub-Recipient must notify the Division as soon as significant developments become known, such as delays or adverse conditions that might raise costs or delay completion, or favorable conditions allowing lower costs or earlier completion.

3) The Sub-Recipient must "obtain prior written approval for any budget revision which would result in a need for additional funds" [44 CFR 13(c)], from the Division and FEMA.

4) A Public Notice shall be published to notify interested parties of the proposed activity. Notices shall be published in a manner that anyone that may be affected or interested in this project has access to the posting, using the Division template, as applicable.

5) Any extension of the Period of Performance shall be submitted to FEMA 60 days prior to the expiration date. Therefore, any request for a Period of Performance Extension shall be in writing and submitted, along with substantiation of new expiration date and a new schedule of work, to the Division a minimum of seventy (70) days prior to the expiration date, for Division processing to FEMA.

6) A copy of the executed subcontract agreement must be forwarded to the Division within 10 days of execution.

7) Phase I – Design of this project is approved with the condition that the enclosed list of deliverables shall be submitted, 30 days prior to the Period of Performance date, for review and approval by the Division, for submittal to FEMA before Phase II – Construction is considered.

8) When Phase I is completed, the Sub-Recipient must provide 100% completed designs, calculations, a full set of signed and sealed plans and, permits for a Phase II review. A final BCA using developed technical data and study results will take place. The data inputs to the final BCA for Phase II approval, must be based on the inputs and outputs of a hazard related study such as erosion, Hydraulic & Hydrologic study, damage calculations, road closures, etc. No assumptions or historical damage will be acceptable for final BCA of Phase II approval. No construction activities for this project have been approved.

9) The Sub-Recipient must avoid duplication of benefits between the HMGP and any other form of assistance, as required by Section 312 of the Stafford Act, and further clarification in 44 CFR 206.191.

10) Sub-Recipient Management Costs (SRMC), implemented under the Disaster Relief and Recovery Act of 2018 (DRRA), amended Section 324 of the Stafford Act, and the Hazard Mitigation Grant Program Management Costs (Interim) FEMA Policy 104-11-1, provides 100% federal funding under HMGP to Sub-Recipients to efficiently manage the grant and complete activities in a timely manner.

   a) SRMC must conform to 2 CFR Part 200, Subpart E, applicable program regulations, and Hazard Mitigation Assistance (HMA) Guidance (2015), ensuring costs are reasonable, allowable, allocable and necessary to the overall project.

   b) Funding is for approved indirect costs, direct administrative costs, and administrative expenses associated with this specific project and shall have adequate documentation.

   c) SRMC cannot exceed 5% of the total project costs awarded.

   d) SRMC is 100% federally funded and will be reimbursed based on actual costs incurred for each individual Request for Reimbursement (RFR) submitted with the required documentation.

   e) SRMC shall be reconciled against actual costs on a quarterly basis and annual basis.

   f) If the Final Project Reconciliation results in a reduction of total project costs, any resulting SRMC overpayment shall be reimbursed back to the State for return to FEMA prior to FEMA Closeout.

This is FEMA project number **4734-077-R.** It is funded under HMGP, FEMA-4734-DR-FL and must adhere to all program guidelines established for the HMGP in accordance with the PAS Operational Agreement for Disaster 4734.

FEMA awarded this project on September 11, 2025; the Period of Performance for this project shall end on **March 31, 2027**.

F) FINANCIAL CONSEQUENCES:

If the Sub-Recipient fails to comply with any term of the award, the Division shall take one or more of the following actions, as appropriate in the circumstances:

1) Temporarily withhold cash payments pending correction of the deficiency by the Sub-Recipient;
2) Disallow all or part of the cost of the activity or action not in compliance;
3) Wholly or partly suspend or terminate the current award for the Sub-Recipient's program;
4) Withhold further awards for the program; or
5) Take other remedies that may be legally available.

Schedule of Work

Phase I –

State Contracting:	6	Months
Bidding / Local Procurement:	2	Months
Design Specifications:	6	Months
Permitting / Survey:	2	Months
Deliverables Submitted to FDEM:	2	Months
Total Period of Performance:	**18**	**Months**

BUDGET

Line Item Budget*

Phase I	**Project Cost**	**Federal Cost**	**Non-Federal Cost**
Materials:	$0.00	$0.00	$0.00
Labor:	$0.00	$0.00	$0.00
Fees:	$45,000.00	$29,736.29	$15,263.71
Initial Agreement Amount:	**$45,000.00**	**$29,736.29**	**$15,263.71**
***Contingency Funds:	$0.00	$0.00	$0.00
Project Total:	**$45,000.00**	**$29,736.29**	**$15,263.71**
****SRMC**			
SRMC:	$1,982.42	$1,982.42	
SRMC-Pre-Award:	$0.00	$0.00	
SRMC Total:	**$1,982.42**	**$1,982.42**	

**Any line item amount in this Budget may be increased or decreased 10% or less, with the Division's approval, without an amendment to this Agreement being required, so long as the overall amount of the funds obligated under this Agreement is not increased.*

***** This project has an estimated $0.00 in contingency funds.** *Per FEMA Hazard Mitigation Assistance Guidance Part VI, D.3.4 – Contingency funds are not automatically available for use. Prior to their release, contingency funds must be re-budgeted to another direct cost category and identified. Post-award changes to the budget require prior written approval from the Division (FDEM) and FEMA. The written request should demonstrate what unforeseen condition related to the project arose that required the use of contingency funds.*

Project Management costs are included for this project in the amount of $0.00.

***** Sub-Recipient Management Costs (SRMC) are included for this project in the amount of $1,982.42 in Federal funding.** *Per the Hazard Mitigation Grant Program Interim FEMA Policy 104-11-1, SRMC provides HMGP funding to Sub-Recipients to efficiently manage the grant and complete activities in a timely manner. SRMC must conform to 2 CFR Part 200, Subpart E, ensuring costs are reasonable, allowable, allocable and necessary to the overall project.*

SRMC cannot exceed 5% of the approved total project costs awarded and shall be reimbursed at 5% for each Request for Reimbursement (RFR) submitted with the required documentation.

If the Final Project Reconciliation results in a reduction of total project costs, any resulting SRMC overpayment shall be reimbursed back to the State for return to FEMA prior to FEMA Closeout.

Funding Summary Totals

Federal Share:	$29,736.29	(66.080650252%)
Non-Federal Share:	$15,263.71	(33.919349748%)
Total Project Cost:	**$45,000.00**	**(100.00%)**
SRMC (100% Federal)	$1,982.42	

Attachment B

Program Statutes and Regulations

The parties to this Agreement and the Hazard Mitigation Grant Program (HMGP) are generally governed by the following statutes and regulations:

(1) The Robert T. Stafford Disaster Relief and Emergency Assistance Act;

(2) 44 C.F.R. 7, 9, 18, 25, and 206. Reference (Title 44, up to date as of August 18, 2023, and last amended January 9, 2023.), and any other applicable FEMA policy memoranda and guidance documents;

(3) State of Florida Administrative Plan for the Hazard Mitigation Grant Program;

(4) The applicable Hazard Mitigation Assistance Program and Policy Guide (HMA Guide);

(5) All applicable laws and regulations delineated in Attachment C of this Agreement.

In addition to the above statutes and regulations, the Sub-recipient must comply with the following:

The Sub-recipient shall fully perform the approved hazard mitigation project, as described in the Application and Attachment A (Budget and Scope of Work) attached to this Agreement, in accordance with approved scope of work indicated therein, the estimate of costs indicated therein, the allocation of funds indicated therein, and the terms and conditions of this Agreement. The Sub-recipient shall not deviate from the approved project and the terms and conditions of this Agreement. The Sub-recipient shall comply with any and all applicable codes and standards in performing work funded under this Agreement, and shall provide any appropriate maintenance and security for the project.

Any development permit issued by, or development activity undertaken by, the Sub-recipient and any land use permitted by or engaged in by the Sub-recipient, shall be consistent with the local comprehensive plan and land development regulations prepared and adopted pursuant to chapter 163, Part II, Florida Statutes. Funds shall be expended for, and development activities and land uses authorized for, only those uses which are permitted under the comprehensive plan and land development regulations. The Sub-recipient shall be responsible for ensuring that any development permit issued and any development activity or land use undertaken is, where applicable, also authorized by the Water Management District, the Florida Department of Environmental Protection, the Florida Department of Health, the Florida Game and Fish Commission, and any Federal, State, or local environmental or land use permitting authority, where required. The Sub-recipient agrees that any repair or construction shall be in accordance with applicable standards of safety, decency, and sanitation, and in conformity with applicable codes, specifications and standards.

The Sub-recipient will provide and maintain competent and adequate engineering supervision at the construction site to ensure that the completed work conforms with the approved plans and specifications and will furnish progress reports and such other information to HMGP as may be required.

If the hazard mitigation project described in Attachment A includes an acquisition or relocation project, then the Sub-recipient shall ensure that, as a condition of funding under this Agreement, the owner of the affected real property shall record in the public records of the county where it is located the following covenants and restrictions, which shall run with and apply to any property acquired, accepted, or from which a structure will be removed pursuant to the project.

(1) The property will be dedicated and maintained in perpetuity for a use that is compatible with open space, recreational, or wetlands management practices;

(2) No new structure will be erected on property other than:
   a. a public facility that is open on all sides and functionally related to a designed open space;
   b. a restroom; or

(3) A structure that the Director of the Federal Emergency Management Agency approves in writing before the commencement of the construction of the structure;

(4) After the date of the acquisition or relocation no application for disaster assistance for any purpose will be made to any Federal entity and no disaster assistance will be provided for the property by any Federal source; and

(5) If any of these covenants and restrictions is violated by the owner or by some third party with the knowledge of the owner, fee simple title to the Property described herein shall be conveyed to the Board of Trustees of the Internal Improvement Trust Fund of the State of Florida without further notice to the owner, its successors and assigns, and the owner, its successors and assigns shall forfeit all right, title and interest in and to the property.

HMGP Contract Manager will evaluate requests for cost overruns and submit to the regional Director written determination of cost overrun eligibility. Cost overruns shall meet Federal regulations set forth in 44 C.F.R. §206.438(b).

The National Environmental Policy Act (NEPA) stipulates that additions or amendments to a HMGP Sub-Recipient Scope of Work (SOW) shall be reviewed by all State and Federal agencies participating in the NEPA process.

As a reminder, the Sub-recipient must obtain prior approval from the State, before implementing changes to the approved project Scope of Work (SOW). Per the Uniform Administrative Requirements for Grants and Cooperative Agreements to State and Local Governments:

(1) For Construction projects, the grantee must “obtain prior written approval for any budget revision which result in a need for additional funds” (2 C.F.R. § 200.308);

(2) A change in the Scope of Work must be approved by FEMA in advance regardless of the budget implications; and

(3) The Sub-recipient must notify the State as soon as significant developments become known, such as delays or adverse conditions that might raise costs or delay completion, or favorable conditions allowing lower cost or earlier completion. Any extensions of the period of performance must be submitted to FEMA ninety (90) calendar days prior to the project expiration date. Reference the applicable Hazard Mitigation Assistance Program and Policy Guide (HMA Guide) Award Extensions guidance.

The Sub-recipient assures that it will comply with the following statutes and regulations to the extent applicable:

(1) 53 Federal Register 8034
(2) Federal Acquisition Regulations 31.2
(3) Section 1352, Title 31, US Code
(4) Chapter 473, Florida Statutes
(5) Chapter 215, Florida Statutes
(6) Section 768.28, Florida Statutes
(7) Chapter 119, Florida Statutes

(8) Section 216.181(6), Florida Statutes
(9) Cash Management Improvement Act of 1990
(10) American with Disabilities Act
(11) Section 112.061, Florida Statutes
(12) Immigration and Nationality Act
(13) Section 286.011, Florida Statutes
(14) 2 C.F.R. Part 200 – Uniform Administrative Requirements, Cost Principles, and Audit Requirements for Federal Awards
(15) Uniform Relocation Assistance and Real Property Acquisitions Act of 1970
(16) Title I of the Omnibus Crime Control and Safe Streets Act of 1968
(17) Juvenile Justice and Delinquency Prevention Act, or the Victims of Crime Act
(18) Omnibus Crime Control and Safe Streets Act of 1968, as amended
(19) Victims of Crime Act (as appropriate)
(20) Section 504 of the Rehabilitation Act of 1973, as amended
(21) Subtitle A, Title II of the Americans with Disabilities Act (ADA) (1990)
(22) Department of Justice regulations on disability discrimination, 28 C.F.R., Part 35 and Part 39
(23) 42 U.S.C. 5154a

Attachment C

Statement of Assurances

To the extent the following provisions apply to this Agreement, the Sub-recipient certifies that:

(a) It possesses legal authority to enter into this Agreement and to carry out the proposed program;

(b) Its governing body has duly adopted or passed as an official act of resolution, motion or similar action authorizing the execution of the hazard mitigation agreement with the Division of Emergency Management (DEM), including all understandings and assurances contained in it, and directing and authorizing the Sub-recipient's chief administrative officer or designee to act in connection with the application and to provide such additional information as may be required;

(c) No member of or delegate to the Congress of the United States, and no Resident Commissioner, shall receive any share or part of this Agreement or any benefit. No member, officer, or employee of the Sub-recipient or its designees or agents, no member of the governing body of the locality in which this program is situated, and no other public official of the locality or localities who exercises any functions or responsibilities with respect to the program during his tenure or for one year after, shall have any interest, direct or indirect, in any contract or subcontract, or the proceeds, for work be performed in connection with the program assisted under this Agreement. The Sub-recipient shall incorporate, in all contracts or subcontracts a provision prohibiting any interest pursuant to the purpose stated above;

(d) All Sub-recipient contracts for which the State Legislature is in any part a funding source, shall contain language to provide for termination with reasonable costs to be paid by the Sub-recipient for eligible contract work completed prior to the date the notice of suspension of funding was received by the Sub-recipient. Any cost incurred after a notice of suspension or termination is received by the Sub-recipient may not be funded with funds provided under this Agreement unless previously approved in writing by the Division. All Sub-recipient contracts shall contain provisions for termination for cause or convenience and shall provide for the method of payment in such event;

(e) It will comply with:

(1) Contract Work Hours and Safety Standards Act of 1962, 40 U.S.C. 327 et seq., requiring that mechanics and laborers (including watchmen and guards) employed on federally assisted contracts be paid wages of not less than one and one-half times their basic wage rates for all hours worked in excess of forty hours in a work week; and

(2) Federal Fair Labor Standards Act, 29 U.S.C. Section 201 et seq., requiring that covered employees be paid at least minimum prescribed wage, and also that they be paid one and one-half times their basic wage rates for all hours worked in excess of the prescribed work-week.

(f) It will comply with

(1) Title VI of the Civil Rights Act of 1964 (P.L. 88-352), and the regulations issued pursuant thereto, which provides that no person in the United States shall on the grounds of race, color, or national origin, be excluded from participation in, be denied the benefits of, or be otherwise subjected to discrimination under any program or activity for which the Sub-recipient received Federal financial assistance and will immediately take any measures necessary to effectuate this assurance. If any real property or structure thereon is provided or improved with the aid of Federal financial assistance extended to the Sub-

recipient, this assurance shall obligate the Sub-recipient, or in the case of any transfer of such property, any transferee, for the period during which the real property or structure is used for a purpose for which the Federal financial assistance is extended, or for another purpose involving the provision of similar services or benefits;

(2) Any prohibition against discrimination on the basis of age under the Age Discrimination Act of 1975, as amended (42 U.S.C. 6101-6107) which prohibits discrimination on the basis of age or with respect to otherwise qualifies handicapped individuals as provided in Section 504 of the Rehabilitation Act of 1973;

(g) It will establish safeguards to prohibit employees from using positions for a purpose that is or gives the appearance of being motivated by a desire for private gain for themselves or others, particularly those with whom they have family, business, or other ties pursuant to section 112.313 and section 112.3135, Florida Statutes;

(h) It will comply with the Anti-Kickback Act of 1986, 41 U.S.C. Chapter 87 which outlaws and prescribes penalties for “kickbacks” of wages in federally financed or assisted construction activities;

(i) It will comply with the provisions of 5 U.S.C. 7323 (further known as the Hatch Act) which limits the political activities of employees;

(j) It will comply with the flood insurance purchase and other requirements of the Flood Disaster Protection Act of 1973, as amended, 42 U.S.C. 50, including requirements regarding the purchase of flood insurance in communities where such insurance is available as a condition for the receipt of any Federal financial assistance for construction or acquisition purposes for use in any area having special flood hazards. The phrase “Federal financial assistance” includes any form of loan, grant, guaranty, insurance payment, rebate, subsidy, disaster assistance loan or grant, or any other form of direct or indirect Federal assistance;

For sites located within Special Flood Hazard Areas (SFHA), the Sub-recipient must include a FEMA Model Acknowledgement of Conditions of Mitigation of Property in a Special Flood Hazard Area with FEMA Grant Funds executed by the title holder with the closeout request verifying that certain SFHA requirements were satisfied on each of the properties. The Model Acknowledgement can be found at www.fema.gov/governmenta/grant/sfha_conditions.shtm

(k) It will require every building or facility (other than a privately owned residential structure) designed, constructed, or altered with funds provided under this Agreement to comply with the “Uniform Federal Accessibility Standards,” (AS) which is Appendix A to 41 C.F.R. Section 101-19.6 for general type buildings and Appendix A to 24 C.F.R., Part 40 for residential structures. The Sub-recipient will be responsible for conducting inspections to ensure compliance with these specifications by the contractor;

(l) It will, in connection with its performance of environmental assessments under the National Environmental Policy Act of 1969, comply with Section 106 of the National Historic Preservation Act of 1966 (54 U.S.C.), Executive Order 11593, 36 C.F.R., Part 800, and the Preservation of Archaeological and Historical Data Act of 1966 (54 U.S.C. 3125) by:

(1) Consulting with the State Historic Preservation Office to identify properties listed in or eligible for inclusion in the National Register of Historic Places that are subject to adverse effects (see 36 C.F.R., Section 800.8) by the proposed activity; and

(2) Complying with all requirements established by the State to avoid or mitigate adverse effects upon such properties.

(3) Abiding by the terms and conditions of the **"Programmatic Agreement Among the Federal Emergency Management Agency, the Florida State Historic Preservation Office, the Florida Division of Emergency Management and the Advisory Council on Historic Preservation, (PA)"** which addresses roles and responsibilities of Federal and State entities in implementing Section 106 of the National Historic Preservation Act (NHPA), 54 U.S.C., and implementing regulations in 36 C.F.R., Part 800.

(4) When any of the Sub-recipient's projects funded under this Agreement may affect a historic property, as defined in 36 C.F.R., Part 800.16 (I)(1), the Federal Emergency Management Agency (FEMA) may require the Sub-recipient to review the eligible scope of work in consultation with the State Historic Preservation Office (SHPO) and suggest methods of repair or construction that will conform with the recommended approaches set out in the **Secretary of Interior's Standards for Rehabilitation and Guidelines for Rehabilitating Historic Buildings 1992 (Standards),** the **Secretary of the Interior's Guidelines for Archeological Documentation (Guidelines)** (48 Federal Register 44734-37), or any other applicable Secretary of Interior standards. If FEMA determines that the eligible scope of work will not conform with the **Standards**, the Sub-recipient agrees to participate in consultations to develop, and after execution by all parties, to abide by, a written agreement that establishes mitigation and recondition measures, including but not limited to, impacts to archeological sites, and the salvage, storage, and reuse of any significant architectural features that may otherwise be demolished.

(5) The Sub-recipient agrees to notify FEMA and the Division if any project funded under this Agreement will involve ground disturbing activities, including, but not limited to: subsurface disturbance; removal of trees; excavation of footings and foundations, and installation of utilities (such as water, sewer, storm drains, electrical, gas, leach lines and septic tanks) except where these activities are restricted solely to areas previously disturbed by the installation, replacement or maintenance of such utilities. FEMA will request the SHPO's opinion on the potential that archeological properties may be present and be affected by such activities. The SHPO will advise the Sub-recipient on any feasible steps to be accomplished to avoid any National Register eligible archeological property or will make recommendations for the development of a treatment plan for the recovery or archeological data from the property.

If the Sub-recipient is unable to avoid the archeological property, develop, in consultation with SHPO, a treatment plan consistent with the **Guidelines** and take into account the Advisory Council on Historic Preservation (Council) publication "Treatment of Archeological Properties". The Sub-recipient shall forward information regarding the treatment plan to FEMA, the SHPO and the Council for review. If the SHPO and the Council do not object within fifteen (15) calendar days of receipt of the treatment plan, FEMA may direct the Sub-recipient to implement the treatment plan. If either the Council or the SHPO object, Sub-recipient shall not proceed with the project until the objection is resolved.

(6) The Sub-recipient shall notify the Division and FEMA as soon as practicable: (a) of any changes in the approved scope of work for a National Register eligible or listed property; (b) of all changes to a project that may result in a supplemental DSR or modify a HMGP project for a National Register eligible or listed property; (c) if it appears that a project funded under this Agreement will affect a previously unidentified property that may be eligible for inclusion in the National Register or affect a known historic property in an unanticipated manner. The Sub-recipient acknowledges that FEMA may require the Sub-recipient to stop construction in the vicinity of the discovery of a previously unidentified property that may eligible for inclusion in the National Register or upon learning that construction may affect a known historic property in an unanticipated manner. The Sub-recipient further acknowledges that FEMA may require the Sub-recipient to take all reasonable measures to avoid or minimize harm to such property until FEMA concludes

consultation with the SHPO. The Sub-recipient also acknowledges that FEMA will require, and the Sub-recipient shall comply with, modifications to the project scope of work necessary to implement recommendations to address the project and the property.

(7) The Sub-recipient acknowledges that, unless FEMA specifically stipulates otherwise, it shall not receive funding for projects when, with intent to avoid the requirements of the PA or the NHPA, the Sub-recipient intentionally and significantly adversely affects a historic property, or having the legal power to prevent it, allowed such significant adverse effect to occur.

(m) It will comply with applicable provisions of the following laws and policies prohibiting discrimination:

(1) Title VI of the Civil Rights Act of 1964, as amended, which prohibits discrimination based on race, color, or national origin (including limited English proficiency).

(2) Section 504 of the Rehabilitation Act of 1973, as amended, which prohibits discrimination based on disability.

(3) Title IX of the Education Amendments Act of 1972, as amended, which prohibits discrimination based on sex in education programs or activities.

(4) Age Discrimination Act of 1975, which prohibits discrimination based on age.

(5) U.S. Department of Homeland Security regulation 6 C.F.R. Part 19, which prohibits discrimination based on religion in social service programs.

(n) It will comply with Title IX of the Education Amendments of 1972, as amended (20 U.S.C. 1681-1683 and 1685-1686) which prohibits discrimination on the basis of sex;

(o) It will comply with the Comprehensive Alcohol Abuse and Alcoholism Prevention, Treatment and Rehabilitation Act of 1970, (42 U.S.C. 4541-45-94) relating to nondiscrimination on the basis of alcohol abuse or alcoholism;

(p) It will comply with 523 and 527 of the Public Health Service Act of 1912 (42 U.S.C. 290 dd-3 and 290 ee-3), as amended, relating to confidentiality of alcohol and drug abuse patient records;

(q) It will comply with Lead-Based Paint Poison Prevention Act (42 U.S.C. 4821 et seq.) which prohibits the use of lead based paint in construction of rehabilitation or residential structures;

(r) It will comply with the Energy Policy and Conservation Act (P.L. 94-163; 42 U.S.C. 6201-6422), and the provisions of the State Energy Conservation Plan adopted pursuant thereto;

(s) It will comply with the Laboratory Animal Welfare Act of 1966, (7 U.S.C. 2131-2159), pertaining to the care, handling, and treatment of warm blooded animals held for research, teaching, or other activities supported by an award of assistance under this Agreement;

(t) It will comply with Title VIII of the Civil Rights Act of 1968, (42 U.S.C 2000c and 42 U.S.C. 3601-3619), as amended, relating to non-discrimination in the sale, rental, or financing of housing, and Title VI of the Civil Rights Act of 1964 (P.L. 88-352), which prohibits discrimination on the basis of race, color or national origin;

(u) It will comply with the Clean Air Act of 1955, as amended, 42 U.S.C. 7401-7675;

(v) It will comply with the Clean Water Act of 1977, as amended, 33 U.S.C. 1251-1388

(w) It will comply with the endangered Species Act of 1973, 16 U.S.C. 1531-1544;

(x) It will comply with the Intergovernmental Personnel Act of 1970, 42 U.S.C. 4701-4772;

(y) It will assist the awarding agency in assuring compliance with the National Historic Preservation Act of 1966, as amended, 54 U.S.C.;

(z) It will comply with environmental standards which may be prescribed pursuant to the National Environmental Policy Act of 1969, 42 U.S.C. 4321-4347;

(aa) It will assist the awarding agency in assuring compliance with the Preservation of Archeological and Historical Preservation Act of 1966, 16 U.S.C. 54 U.S.C. 3125

(bb) It will comply with the Rehabilitation Act of 1973, Section 504, 29 U.S.C. 794, regarding non-discrimination;

(cc) It will comply with the environmental standards which may be prescribed pursuant to the Safe Drinking Water Act of 1974, 42 U.S.C. 300f-300j-27, regarding the protection of underground water sources;

(dd) It will comply with the requirements of Titles II and III of the Uniform Relocation Assistance and Property Acquisition Policies Act of 1970, 42 U.S.C. 4621-4638, which provide for fair and equitable treatment of persons displaced or whose property is acquired as a result of Federal or Federally assisted programs;

(ee) It will comply with the Wild and Scenic Rivers Act of 1968, 16 U.S.C. 1271-1287, related to protecting components or potential components of the national wild and scenic rivers system;

(ff) It will comply with the following Executive Orders: EO 11514 (NEPA); EO 11738 (violating facilities); EO 11988 (Floodplain Management); and EO 11990 (Wetlands).

(gg) It will comply with the Coastal Barrier Resources Act of 1977, 16 U.S.C. 3501-3510;

(hh) It will assure project consistency with the approved State program developed under the Coastal Zone Management Act of 1972, 16 U.S.C. 1451-14674; and

(ii) It will comply with the Fish and Wildlife Coordination Act of 1958, 16 U.S.C. 661-668.

(jj) With respect to demolition activities, it will:

(1) Create and make available documentation sufficient to demonstrate that the Sub-recipient and its demolition contractor have sufficient manpower and equipment to comply with the obligations as outlined in this Agreement.

(2) Return the property to its natural state as though no improvements had ever been contained thereon.

(3) Furnish documentation of all qualified personnel, licenses and all equipment necessary to inspect buildings located in the Sub-recipient's jurisdiction to detect the presence of asbestos and lead in accordance with requirements of the U.S. Environmental Protection Agency, the Florida Department of Environmental Protection and the County Health Department.

(4) Provide documentation of the inspection results for each structure to indicate:
   a. Safety Hazard Present
   b. Health Hazards Present

c. Hazardous Materials Present

(5) Provide supervision over contractors or employees employed by the Sub-recipient to remove asbestos and lead from demolished or otherwise applicable structures.

(6) Leave the demolished site clean, level and free of debris.

(7) Notify the Division promptly of any unusual existing condition which hampers the contractor's work.

(8) Obtain all required permits.

(9) Provide addresses and marked maps for each site where water wells and septic tanks are to be closed along with the number of wells and septic tanks located on each site. Provide documentation of closures.

(10) Comply with mandatory standards and policies relating to energy efficiency which are contained in the State Energy Conservation Plan issued in compliance with the Energy Policy and Conservation Act (Public Law 94-163).

(11) Comply with all applicable standards, orders, or requirements issued under Section 112 and 306 of the Clean Air Act (42 U.S.C. 1857), Section 508 of the Clean Water Act (33 U.S.C. 1251-1388), Executive Order 11738, and the U.S. Environmental Protection Agency regulations (40 C.F.R., Part 15 and 61). This clause shall be added to any subcontracts.

(12) Provide documentation of public notices for demolition activities.

Attachment D

REQUEST FOR ADVANCE OR REIMBURSEMENT OF HAZARD MITIGATION ASSISTANCE PROGRAM FUNDS

SUB-RECIPIENT: City of Tarpon Springs

REMIT ADDRESS: P.O. Box 5004, 324 Pine Street

CITY: Tarpon Springs STATE: FL ZIP CODE: 34689

PROJECT TYPE: Flood Risk Reduction PROJECT #: 4734-077-R

PROGRAM: Hazard Mitigation Grant Program CONTRACT #: H1255

BUDGET: _____ FEDERAL SHARE: _____ LOCAL: _____

ADVANCED RECEIVED: _____ N/A _____ AMOUNT: _____ SETTLED? _____

Invoice Period: _____ through _____ Payment No: _____

Total of Previous Payments to Date: _____ (Federal)
Total of Previous SRMC to Date: (SRMC Federal)
Total Federal to Date: _____ (Total Federal Paid)

Eligible Amount 100% (Current Request)	Obligated Federal Amount 66.080650252 %	Obligated Local Non-Federal 33.919349748 %	**Division Use Only**	
			Approved	Comments

TOTAL CURRENT REQUEST: $ _____

By signing this report, I certify to the best of my knowledge and belief that the report is true, complete, and accurate, and the expenditures, disbursements and cash receipts are for the purposes and objectives set forth in the terms and conditions of the Federal award. I am aware that any false, fictitious, or fraudulent information, or the omission of any material fact, may subject me to criminal, civil or administrative penalties for fraud, false statements, false claims or otherwise. (U.S. Code Title 18, Section 1001 and Title 31, Sections 3729-3730 and 3801-3812.

SUB-RECIPIENT SIGNATURE: _____

NAME: _____ TITLE: _____ DATE: _____

TO BE COMPLETED BY THE DIVISION

APPROVED PROJECT TOTAL $ _____

APPROVED SRMC TOTAL: $ _____

APPROVED FOR PAYMENT $ _____

_____
DIVISION DIRECTOR

_____
DATE

Attachment D (cont.)
SUMMARY OF DOCUMENTATION IN SUPPORT OF AMOUNT CLAIMED FOR ELIGIBLE DISASTER WORK UNDER THE HAZARD MITIGATION ASSISTANCE PROGRAM

SUB-RECIPIENT: City of Tarpon Springs PAYMENT #:

PROJECT TYPE: Flood Risk Reduction PROJECT #: 4734-077-R

PROGRAM: Hazard Mitigation Grant Program CONTRACT #: H1255

	REF NO[2]	DATE[3]	DOCUMENTATION [4]	*(Check) AMOUNT*	ELIGIBLE COSTS (100%)
1					
2					
3					
4					
5					
6					
7					
8					
This payment represents % completion of the project.				***TOTAL***	

[2] Recipient's internal reference number (e.g., Invoice, Receipt, Warrant, Voucher, Claim Check, or Schedule #)
[3] Date of delivery of articles, completion of work or performance services. (per document)
[4] List Documentation (Recipient's payroll, material out of recipient's stock, recipient owned equipment and name of vendor or contractor) by category (Materials, Labor, Fees) and line item in the approved project line item budget. Provide a brief description of the articles or services. List service dates per each invoice.

Attachment E
JUSTIFICATION OF ADVANCE PAYMENT

SUB-RECIPIENT: CITY OF TARPON SPRINGS

If you are requesting an advance, indicate same by checking the box below.

[ ] **ADVANCE REQUESTED**

Advance payment of $ _____ is requested. Balance of payments will be made on a reimbursement basis. These funds are needed to pay staff, award benefits to clients, duplicate forms and purchase start-up supplies and equipment. We would not be able to operate the program without this advance.

If you are requesting an advance, complete the following chart and line item justification below. PLEASE NOTE: Calculate your estimated expenses at 100% of your expected needs for ninety (90) days. Submit Attachment D with the cost share breakdown along with Attachment E and all supporting documentation.

ESTIMATED EXPENSES

BUDGET CATEGORY/LINE ITEMS (list applicable line items)	**20___-20___ Anticipated Expenditures for First Three Months of Contract**
For example ADMINISTRATIVE COSTS (Include Secondary Administration.)	
For example PROGRAM EXPENSES	
TOTAL EXPENSES	

LINE ITEM JUSTIFICATION **(For each line item, provide a detailed justification explaining the need for the cash advance. The justification must include supporting documentation that clearly shows the advance will be expended within the first ninety (90) days of the contract term. Support documentation should include quotes for purchases, delivery timelines, salary and expense projections, etc. to provide the Division reasonable and necessary support that the advance will be expended within the first ninety (90) days of the contract term. Any advance funds not expended within the first ninety (90) days of the contract term as evidenced by copies of invoices and cancelled checks as required by the Budget and Scope of work showing 100% of expenditures for the 90 day period shall be returned to the Division Cashier, 2555 Shumard Oak Boulevard, Tallahassee, Florida 32399, within thirty (30) days of receipt, along with any interest earned on the advance.**

Attachment F

QUARTERLY REPORT FORM

***Instructions**: Complete and submit this form to State Project Manager within15-days after each quarter:*

SUB-RECIPIENT: City of Tarpon Springs **PROJECT #:** 4734-077-R

PROJECT TYPE: Flood Risk Reduction **CONTRACT #:** H1255

PROGRAM: Hazard Mitigation Grant Program **QUARTER ENDING:** _____

Advance Payment Information:
Advance Received ☐ N/A ☐ Amount: $ _____ Advance Settled? Yes ☐ No ☐

Financial Amount to Date:
Sub-Recipient Total Project Expenditures to date (federal & local): $

Target Dates (State Agreement):
Contract Execution Date: _____ Contract Expiration Date: _____
Date Deliverables Submitted: _____ Closeout Requested Date: _____

Describe **Milestones** achieved during this quarter:

Project Proceeding on **Schedule**? ☐ Yes ☐ No (*If No, Describe under **Issues** below)*

Percentage of Milestones completed to Date: _____%

Describe Activities - Milestones completed this quarter only:

Schedule of the Milestones-Activities:

Milestone	**Dates** (estimated)
State Contracting	
Closeout Compliance	
Estimated Project Completion Date:	

Issues or circumstances affecting completion date, milestones, scope of work, and/or cost:

Cost Status: ☐ Cost Unchanged ☐ Under Budget ☐ Over Budget

Cost / Financial **Comments:**

NOTE: Events may occur between quarterly reports, which have significant impact upon your project(s), such as anticipated overruns, changes in scope of work, extensions. Contact the Division as soon as these conditions are known, otherwise you could be non-compliant with your sub-grant award.

Sub-Recipient Contract Representative (POC): _____

Signature: _____ Phone: _____

~ To be completed by Florida Division of Emergency Management Project Manager ~

Project Manager Statement: ☐ *No Action Required, OR*

☐ *Action Required:* _____

PM Percentage of Activates competed per PM Review QR Milestones Spreadsheet: ____%

Date Reviewed: _____ *Reviewer:* _____ *Project Manager*

Attachment G

Warranties and Representations

Financial Management

The Sub-Recipient's financial management system must comply with 2 C.F.R. §200.302.

Procurements

Any procurement undertaken with funds authorized by this Agreement must comply with the requirements of 2 C.F.R. §200, Part D—Post Federal Award Requirements—Procurement Standards (2 C.F.R. §§200.317 through 200.327).

Business Hours

The Sub-Recipient shall have its offices open for business, with the entrance door open to the public, and at least one employee on site, from: **8:00 AM - 5:00 PM, Monday Thru Friday, as applicable.**

Licensing and Permitting

All subcontractors or employees hired by the Sub-Recipient shall have all current licenses and permits required for all of the particular work for which they are hired by the Sub-Recipient.

Attachment H

Certification Regarding
Debarment, Suspension, Ineligibility
And Voluntary Exclusion

Subcontractor Covered Transactions

The prospective subcontractor, _____, of the Sub-Recipient certifies, by submission of this document, that neither it, its principals, nor affiliates are presently debarred, suspended, proposed for debarment, declared ineligible, voluntarily excluded, or disqualified from participation in this transaction by any Federal department or agency.

SUBCONTRACTOR

_____

By: _____
Signature

_____
Name and Title

_____
Street Address

_____
City, State, Zip

_____
Date

City of Tarpon Springs
Sub-Recipient's Name

H1255
DEM Contract Number

4734-077-R
FEMA Project Number

Attachment I

Federal Funding Accountability and Transparency Act

Instructions and Worksheet

PURPOSE: The Federal Funding Accountability and Transparency Act (FFATA) was signed on September 26, 2006. The intent of this legislation is to empower every American with the ability to hold the government accountable for each spending decision. The FFATA legislation requires information on federal awards (federal assistance and expenditures) be made available to the public via a single, searchable website, which is http://www.usaspending.gov/.

The FFATA Sub-award Reporting System (FSRS) is the reporting tool the Florida Division of Emergency Management ("FDEM" or "Division") must use to capture and report sub-award and executive compensation data regarding first-tier sub-awards that obligate $25,000 or more in Federal funds (excluding Recovery funds as defined in section 1512(a)(2) of the American Recovery and Reinvestment Act of 2009, Pub. L. 111-5).

Note: This "Instructions and Worksheet" is meant to explain the requirements of the FFATA and give clarity to the FFATA Form distributed to sub-awardees for completion. All pertinent information below should be filled out, signed, and returned to the project manager.

ORGANIZATION AND PROJECT INFORMATION

The following information must be provided to the FDEM prior to the FDEM's issuance of a sub-award (Agreement) that obligates $25,000 or more in federal funds as described above. Please provide the following information and return the signed form to the Division as requested.

PROJECT #: 4734-077-R

FUNDING AGENCY: Federal Emergency Management Agency

AWARD AMOUNT: $ 31,718.71

OBLIGATION/ACTION DATE: September 11, 2025

SUBAWARD DATE (if applicable):

UEID/SAM#: Q41BMMTPYN93

*If your company or organization does not have a UEID/SAM number, you will need to obtain one from https://sam.gov/content/entity-registrationThe process to request a UEID/SAM number takes about ten minutes and is free of charge.

BUSINESS NAME: _____

DBA NAME (IF APPLICABLE): _____

PRINCIPAL PLACE OF BUSINESS ADDRESS: _____

ADDRESS LINE 1: _____

ADDRESS LINE 2: _____

ADDRESS LINE 3: _____

CITY _____ STATE _____ ZIP CODE+4** _____

PARENT COMPANY UEID/SAM# (if applicable): _____

CATALOG OF FEDERAL DOMESTIC ASSISTANCE (CFDA#): _____

DESCRIPTION OF PROJECT (Up to 4000 Characters)

As a Hazard Mitigation Grant Program project, the Sub-Recipient proposes flood risk reduction improvements from the intersection of Cross Street and Athens Street westward to the intersection of Dodecanese Boulevard and Arfaras Street to mitigate flooding in the Sponge Docks area, located in Tarpon Springs, Florida 34689.

The scope of work is for Phase I only, which includes but is not limited to surveying, engineering, design, plans preparation, permitting and bidding for the proposed project, for Phase II approval. No construction activities for this project have been approved.

When completed, the Sub-Recipient shall provide deliverables for Phase II review of the following proposed activities.

The Phase II proposed scope of work shall provide protection by improving the Sponge Docks area's existing stormwater system's capacity and conveyance by constructing additional drainage components that help collect, convey, and filter stormwater before depositing offsite to the Anclote River. The improvements include sixteen (16) new stormwater collection inlets and one thousand two hundred and one linear feet (1,201 lf) of pipe culvert ranging in size between fifteen inches (15") to forty-eight inches (48") along Athens Street and Dodecanese Boulevard, a stormwater pump station near the Dodecanese Boulevard and Athens Street intersection consisting of a lift station and three (3) stormwater pumps each capable of reaching a flow rate of one hundred and twenty thousand gallons per minute (120,000 gpm), and thirty-six inch (36") discharge pipe leading to an existing seawall outfall. This project shall address the lack of collection capacity and conveyance of stormwater in the Sponge Docks area that has caused commercial properties to experience repetitive flooding during storm events.

The project shall be designed to provide protection against a 100-year storm event. Activities shall be completed in strict compliance with Federal, State and Local applicable Rules and Regulations.

Project Locations:

ID#	Name/Station	Location	Coordinates
1)	City of Tarpon Springs, 34689	1. S Point (Athens St) 2. W Point (Cross St & Athens St) 3. NW Point (Dodecanese Blvd & Athens St) 4. E Point (Dodecanese Blvd & Arfaras St)	1. (28.154343, -82.760259) 2. (28.154788, -82.760580) 3. (28.155573, -82.760180) 4. (28.155356, -82.756980)

Verify the approved project description above, if there is any discrepancy, please contact the project manager.

PRINCIPAL PLACE OF PROJECT PERFORMANCE (IF DIFFERENT THAN PRINCIPAL PLACE OF BUSINESS): _____

ADDRESS LINE 1: _____

ADDRESS LINE 2: _____

ADDRESS LINE 3: _____

CITY _____ STATE _____ ZIP CODE+4** _____

CONGRESSIONAL DISTRICT FOR PRINCIPAL PLACE OF PROJECT PERFORMANCE:

**Providing the Zip+4 ensures that the correct Congressional District is reported.

EXECUTIVE COMPENSATION INFORMATION:

1. In your business or organization's previous fiscal year, did your business or organization (including parent organization, all branches, and all affiliates worldwide) receive (a) 80 percent or more of your annual gross revenues from Federal procurement contracts (and subcontracts) and Federal financial assistance (e.g. loans, grants, subgrants, and/or cooperative agreements, etc.) subject to the Transparency Act, as defined at 2 C.F.R. 170.320; , (b) $25,000,000 or more in annual gross revenues from U.S. Federal procurement contracts (and subcontracts) and Federal financial assistance (e.g. loans, grants, subgrants, and/or cooperative agreements, etc.) subject to the Transparency Act?

   Yes ☐ No ☐

If the answer to Question 1 is "Yes," continue to Question 2. If the answer to Question 1 is "No", move to the signature block below to complete the certification and submittal process.

2. Does the public have access to information about the compensation of the executives in your business or organization (including parent organization, all branches, and all affiliates worldwide) through periodic reports filed under section 13(a) or 15(d) of the Securities Exchange Act of 1934 (15 U.S.C. 78m(a), 78o(d)) Section 6104 of the Internal Revenue Code of 1986?

   Yes ☐ No ☐

If the answer to Question 2 is "Yes," move to the signature block below to complete the certification and submittal process. [Note: Securities Exchange Commission information should be accessible at http//www.sec.gov/answers/execomp.htm. Requests for Internal Revenue Service (IRS) information should be directed to the local IRS for further assistance.]

If the answer to Question 2 is "No" FFATA reporting is required. Provide the information required in the "TOTAL COMPENSATION CHART FOR MOST RECENTLY COMPLETED FISCAL YEAR" appearing below to report the "Total Compensation" for the five (5) most highly compensated "Executives", in rank order, in your organization. For purposes of this request, the following terms apply as defined in 2 C.F.R. Ch. 1 Part 170 Appendix A:

"Executive" is defined as "officers, managing partners, or other employees in management positions".

"Total Compensation" is defined as the cash and noncash dollar value earned by the executive during the most recently completed fiscal year and includes the following:

i. Salary and bonus.

ii. Awards of stock, stock options, and stock appreciation rights. Use the dollar amount recognized for financial statement reporting purposes with respect to the fiscal year in accordance with the Statement of Financial Accounting Standards No. 123 (Revised 2004) (FAS 123R), Shared Based Payments.

iii. Earnings for services under non-equity incentive plans. This does not include group life, health, hospitalization or medical reimbursement plans that do not discriminate in favor of executives, and are available generally to all salaried employees.

iv. Change in pension value. This is the change in present value of defined benefit and actuarial pension plans.

v. Above-market earnings on deferred compensation which is not tax-qualified.

vi. Other compensation, if the aggregate value of all such other compensation (e.g. severance, termination payments, value of life insurance paid on behalf of the employee, perquisites or property) for the executive exceeds $10,000.

TOTAL COMPENSATION CHART FOR MOST RECENTLY COMPLETED FISCAL YEAR

(Date of Fiscal Year Completion _____)

Rank (Highest to Lowest)	**Name (Last, First, MI)**	**Title**	**Total Compensation for Most Recently Completed Fiscal Year**
1			
2			
3			
4			
5			

THE UNDERSIGNED CERTIFIES THAT ON THE DATE WRITTEN BELOW, THE INFORMATION PROVIDED HEREIN IS ACCURATE.

SIGNATURE: _____

NAME AND TITLE: _____

DATE: _____

Attachment J

Mandatory Contract Provisions

Provisions:

Any contract or subcontract funded by this Agreement must contain the applicable provisions outlined in Appendix II to 2 C.F.R. Part 200. It is the responsibility of the sub-recipient to include the required provisions. The following is a list of sample provisions from Appendix II to 2 C.F.R. Part 200 that may be required:[1]

Appendix II to Part 200—Contract Provisions for Non-Federal Entity Contracts Under Federal Awards

In addition to other provisions required by the Federal agency or non-Federal entity, all contracts made by the non-Federal entity under the Federal award must contain provisions covering the following, as applicable.

(A) Contracts for more than the simplified acquisition threshold, which is the inflation adjusted amount determined by the Civilian Agency Acquisition Council and the Defense Acquisition Regulations Council (Councils) as authorized by 41 U.S.C. 1908, must address administrative, contractual, or legal remedies in instances where contractors violate or breach contract terms, and provide for such sanctions and penalties as appropriate.

(B) All contracts in excess of $10,000 must address termination for cause and for convenience by the non-Federal entity including the manner by which it will be affected and the basis for settlement.

(C) Equal Employment Opportunity. Except as otherwise provided under 41 C.F.R. Part 60, all contracts that meet the definition of "federally assisted construction contract" in 41 C.F.R. Part 60-1.3 must include the equal opportunity clause provided under 41 C.F.R. 60-1.4(b), in accordance with Executive Order 11246, "Equal Employment Opportunity" (30 FR 12319, 12935, 3 C.F.R. Part, 1964-1965 Comp., p. 339), as amended by Executive Order 11375, "Amending Executive Order 11246 Relating to Equal Employment Opportunity," and implementing regulations at 41 C.F.R. part 60, "Office of Federal Contract Compliance Programs, Equal Employment Opportunity, Department of Labor."

(D) Davis-Bacon Act, as amended (40 U.S.C. 3141-3148). When required by Federal program legislation, all prime construction contracts in excess of $2,000 awarded by non-Federal entities must include a provision for compliance with the Davis-Bacon Act (40 U.S.C. 3141-3144, and 3146-3148) as supplemented by Department of Labor regulations (29 C.F.R. Part 5, "Labor Standards Provisions Applicable to Contracts Covering Federally Financed and Assisted Construction"). In accordance with the statute, contractors must be required to pay wages to laborers and mechanics at a rate not less than the prevailing wages specified in a wage determination made by the Secretary of Labor. In addition, contractors must be required to pay wages not less than once a week. The non-Federal entity must place a copy of the current prevailing wage determination issued by the Department of Labor in each solicitation. The decision to award a contract or subcontract must be conditioned upon the acceptance of the wage determination. The non-Federal entity must report all suspected or reported violations to the Federal awarding agency. The contracts must also include a provision for compliance with the Copeland "Anti-Kickback" Act (40 U.S.C. 3145), as supplemented by Department of Labor regulations (29 C.F.R. Part 3, "Contractors and Subcontractors on Public Building or Public Work Financed in Whole or in Part by Loans or Grants from the United States"). The Act provides that each contractor or Sub-recipient must be prohibited from inducing, by any means, any person employed in the construction, completion, or

[1] For example, the Davis-Bacon Act is not applicable to other FEMA grant and cooperative agreement programs, including the Public Assistance Program or Hazard Mitigation Grant Program; however, sub-recipient may include the provision in its subcontracts.

repair of public work, to give up any part of the compensation to which he or she is otherwise entitled. The non-Federal entity must report all suspected or reported violations to the Federal awarding agency.

(E) Contract Work Hours and Safety Standards Act (40 U.S.C. 3701-3708). Where applicable, all contracts awarded by the non-Federal entity in excess of $100,000 that involve the employment of mechanics or laborers must include a provision for compliance with 40 U.S.C. 3702 and 3704, as supplemented by Department of Labor regulations (29 C.F.R. Part 5). Under 40 U.S.C. 3702 of the Act, each contractor must be required to compute the wages of every mechanic and laborer on the basis of a standard work week of 40 hours. Work in excess of the standard work week is permissible provided that the worker is compensated at a rate of not less than one and a half times the basic rate of pay for all hours worked in excess of 40 hours in the work week. The requirements of 40 U.S.C. 3704 are applicable to construction work and provide that no laborer or mechanic must be required to work in surroundings or under working conditions which are unsanitary, hazardous or dangerous. These requirements do not apply to the purchases of supplies or materials or articles ordinarily available on the open market, or contracts for transportation or transmission of intelligence.

(F) Rights to Inventions Made Under a Contract or Agreement. If the Federal award meets the definition of “funding agreement” under 37 C.F.R. § 401.2 (a) and the recipient or Sub-recipient wishes to enter into a contract with a small business firm or nonprofit organization regarding the substitution of parties, assignment or performance of experimental, developmental, or research work under that “funding agreement,” the recipient or Sub-recipient must comply with the requirements of 37 C.F.R. Part 401, “Rights to Inventions Made by Nonprofit Organizations and Small Business Firms Under Government Grants, Contracts and Cooperative Agreements,” and any implementing regulations issued by the awarding agency.

(G) Clean Air Act (42 U.S.C. 7401-7671q.) and the Federal Water Pollution Control Act (33 U.S.C. 1251-1387), as amended—Contracts and subgrants of amounts in excess of $150,000 must contain a provision that requires the non-Federal award to agree to comply with all applicable standards, orders or regulations issued pursuant to the Clean Air Act (42 U.S.C. 7401-7671q) and the Federal Water Pollution Control Act as amended (33 U.S.C. 1251-1387). Violations must be reported to the Federal awarding agency and the Regional Office of the Environmental Protection Agency (EPA).

(H) Debarment and Suspension (Executive Orders 12549 and 12689)—A contract award (see 2 C.F.R. 180.220) must not be made to parties listed on the governmentwide Excluded Parties List System in the System for Award Management (SAM), in accordance with the OMB guidelines at 2 C.F.R. 180 that implement Executive Orders 12549 (3 C.F.R. Part 1986 Comp., p. 189) and 12689 (3 C.F.R. Part 1989 Comp., p. 235), “Debarment and Suspension.” The Excluded Parties List System in SAM contains the names of parties debarred, suspended, or otherwise excluded by agencies, as well as parties declared ineligible under statutory or regulatory authority other than Executive Order 12549.

(I) Byrd Anti-Lobbying Amendment (31 U.S.C. 1352)—Contractors that apply or bid for an award of $100,000 or more must file the required certification. Each tier certifies to the tier above that it will not and has not used Federal appropriated funds to pay any person or organization for influencing or attempting to influence an officer or employee of any agency, a member of Congress, officer or employee of Congress, or an employee of a member of Congress in connection with obtaining any Federal contract, grant or any other award covered by 31 U.S.C. 1352. Each tier must also disclose any lobbying with non-Federal funds that takes place in connection with obtaining any Federal award. Such disclosures are forwarded from tier to tier up to the non-Federal award.

(J) See 2 C.F.R, § 200.323 Procurement of recovered materials.

(K) See 2 C.F.R, §200.216 Prohibition on certain telecommunication and video surveillance services or equipment.

(L) See 2 C.F.R, §200.322 Domestic preferences for procurements

(Appendix II to Part 200, Revised Eff. 11/12/2020).

FEMA created the 2019 PDAT Contract Provisions Template to assist non-Federal entities. It is *available at* https://www.fema.gov/media-library-data/1569959119092-92358d63e00d17639d5db4de015184c9/PDAT_ContractProvisionsTemplate_9-30-19.pdf.

Please note that the sub-recipient alone is responsible for ensuring that all language included in its contracts meets the requirements of 2 C.F.R. § 200.327 and 2 C.F.R. Part 200, Appendix II.

Attachment K

Certification Regarding Lobbying

Check the appropriate box:

☐ This Certification Regarding Lobbying is required because the Contract, Grant, Loan, or Cooperative Agreement will exceed $100,000 pursuant to 2 C.F.R. Part 200, Appendix II(I); 31 U.S.C. § 1352; and 44 C.F.R. Part 18.

☐ This Certification is not required because the Contract, Grant, Loan, or Cooperative Agreement will be less than $100,000.

APPENDIX A, 44 C.F.R. PART 18 – CERTIFICATION REGARDING LOBBYING

Certification for Contracts, Grants, Loans, and Cooperative Agreements

The undersigned certifies, to the best of his or her knowledge and belief, that:

1. No Federal appropriated funds have been paid or will be paid, by or on behalf of the undersigned, to any person for influencing or attempting to influence an officer or employee of an agency, a Member of Congress, an officer or employee of Congress, or an employee of a Member of Congress in connection with the awarding of any Federal contract, the making of any Federal grant, the making of any Federal loan, the entering into of any cooperative agreement, and the extension, continuation, renewal, amendment, or modification of any Federal contract, grant, loan, or cooperative agreement.

2. If any funds other than Federal appropriated funds have been paid or will be paid to any person for influencing or attempting to influence an officer or employee of any agency, a Member of Congress, an officer or employee of Congress, or an employee of a Member of Congress in connection with this Federal contract, grant, loan, or cooperative agreement, the undersigned shall complete and submit Standard Form-LLL, "Disclosure Form to Report Lobbying," in accordance with its instructions.

3. The undersigned shall require that the language of this certification be included in the award documents for all subawards at all tiers (including subcontracts, subgrants, and contracts under grants, loans, and cooperative agreements) and that all subrecipients shall certify and disclose accordingly.

This certification is a material representation of fact upon which reliance was placed when this transaction was made or entered into. Submission of this certification is a prerequisite for making or entering into this transaction imposed by section 1352, title 31, U.S. Code. Any person who fails to file the required certification shall be subject to a civil penalty of not less than $10,000 and not more than $100,000 for each such failure.

The Sub-Recipient or subcontractor, _____, certifies or affirms the truthfulness and accuracy of each statement of its certification and disclosure, if any. In addition, the Contractor understands and agrees that the provisions of 31 U.S.C. Chap. 38, Administrative Remedies for False Claims and Statements, apply to this certification and disclosure, if any.

_____
Signature of Sub-Recipient/subcontractor's Authorized Official

_____
Name and Title of Sub-Recipient/subcontractor's Authorized Official

_____
Date

Attachment L

Florida Accountability Contract Tracking System (FACTS)
Requirements for Non-profit Organizations Under Section 216.1366, Florida Statutes
Instructions and Worksheet

CONTRACT DOCUMENTATION REQUIREMENTS

Section 216.1366, F.S., amended in 2023, establishes new documentation requirements for any contract for services executed, amended, or extended on or after July 1, 2023, with non-profit organizations as defined in s. 215.97 (2)(m). F.S. The contract must require the contractor to provide documentation that indicates the amount of state funds:

- Allocated to be used during the full term of the contract for remuneration to any member of the board of directors or an officer of the contractor.
- Allocated under each payment by the public agency to be used for remuneration of any member of the board of directors or an officer of the contractor. The documentation must indicate the amounts and recipients of the remuneration.

Such information must be included in the contract tracking system maintained pursuant to s. 215.985 F.S. and must be posted on the contractor's website if the contractor maintains a website.

• As used in this subsection, the term:

o "Officer" means a Chief Executive Officer (CEO), Chief Financial Officer (CFO), Chief Operating Officer (COO), or any other position performing an equivalent function.

o "Remuneration" means all compensation earned by or awarded to personnel, whether paid or accrued, regardless of contingency, including bonuses, accrued paid time off, severance payments, incentive payments, contributions to a retirement plan, or in-kind payments, reimbursements, or allowances for moving expenses, vehicles and other transportation, telephone services, medical services, housing, and meals.

o "State funds" means funds paid from the General Revenue Fund or any state trust fund, funds allocated by the Federal Government and distributed by the state, or funds appropriated by the state for distribution through any grant program. The term does not include funds used for the state Medicaid program.

Note: This "Instructions and Worksheet" is meant to explain the requirements of the Section 216.1366, F.S., amended in 2023, and give clarity to the attached form distributed to recipients and sub-recipients for completion. All pertinent information below should be filled out, signed, and returned to the project manager.

NON-PROFIT ORGANIZATION REMUNERATION INFORMATION

1. Is your business or organization a non-profit organization as defined in s. 215.97 (2)(m). F.S.?
Yes ☐ No ☐

If the answer to Question 1 is "Yes," continue to Question 2. If the answer to Question 1 is "No", move to the signature block below to complete the certification and submittal process.

2. Will state funds be used as remuneration to any member of the board of directors or an officer in your business or organization?
Yes ☐ No ☐

If the answer to Question 2 is “Yes,” provide the information required in the “Total Compensation Paid to Non-Profit Personnel Using State Funds” form below. A separate form should be completed for each member of the board of directors or officer being compensated using state funds. If the answer to Question 2 is “No”, move to the signature block below to complete the certification and submittal process.

Total Compensation Paid to Non-Profit Personnel Using State Funds

Name:		
Title:		
Agency Agreement/Contract #		
Total Contract Amount		
Contract Term:		
Line Item Budget Category	**Total Amount Paid**	**Amount Paid from State Funds**
Salaries		
Fringe Benefits		
Bonuses		
Accrued Paid Time Off		
Severance Payments		
Retirement Contributions		
In-Kind Payments		
Incentive Payments		
Reimbursements/Allowances		
Moving Expenses		
Transportation Costs		
Telephone Services		
Medical Services Costs		
Housing Costs		
Meals		

CERTIFICATION: I certify that the amounts listed above are true and accurate and in accordance with the approved budget.

Name:	
Signature:	
Title:	
Date:	

ATTACHMENT M

FOREIGN COUNTRY OF CONCERN AFFIDAVIT –
PERSONAL IDENTIFYING INFORMATION CONTRACT

Section 287.138, Florida Statutes, prohibits a Florida "Governmental entity"[2] from entering into or extending contracts with any other entity whereby such a contract, or extension thereof, could grant the other entity access to an individual's personal identifying information if that entity is associated with a "Foreign Country of Concern."[3] Specifically, section 287.138(2), Florida Statutes, prohibits such contracts with any entity that is owned by the government of a Foreign Country of Concern, any entity in which the government of a Foreign Country of Concern has a "controlling interest,"[4] and any entity organized under the laws of or which has its principal place of business in a Foreign Country of Concern.

As the person authorized to sign on behalf of Respondent, I hereby attest that the company identified above in the section entitled "Respondent Vendor Name" is not an entity owned by the government of a Foreign Country of Concern, no government of a Foreign Country of Concern has a controlling interest in the entity, and the entity has not been organized under the laws of or has its principal place of business in a Foreign Country of Concern.

I understand that pursuant to section 287.138, Florida Statutes, I am submitting this affidavit under penalty of perjury.

Respondent Vendor Name: _____

Vendor FEIN: _____

Vendor's Authorized Representative Name and Title: _____

Address: _____

City: _____ State: _____ Zip: _____

Phone Number: _____

Email Address: _____

Certified By: _____
AUTHORIZED SIGNATURE

Print Name and Title: _____

Date: _____

[2] As defined in Section 287.138 (1)(d), Florida Statutes.
[3] As defined in Section 287.138 (1)(c), Florida Statutes.
[4] As defined in Section 287.138 (1)(a), Florida Statutes.

Project Administration Department

324 East Pine Street
Tarpon Springs FL 34689
(727) 942-5638

Memorandum

Date: December 9, 2025

To: Mayor, Board of Commissioners, and City Manager

Through: Thomas Kiger, Public Services Director TK

From: P.J. Harbert, Grant Project Specialist

Subject: State of Florida Department of Environmental Protection Standard Grant Agreement #26SRP16

Recommendation
Approval is recommended for the Mayor or his designee per City resolution to execute a Standard Grant Agreement with the State of Florida Department of Environmental Protection (FDEP) in the amount of $2,207,000 for the Tarpon Springs Wastewater Treatment Electrical Resiliency Project.

Summary
Through the proposed grant agreement, the State of Florida has agreed to partner with the City to fund the City's Wastewater Treatment Electrical Resiliency Project. This funding will include relocating electrical operations to an existing elevated building to accommodate installation of a new electrical motor control center and communication network for the Advanced Wastewater Treatment Facility. A new and upsized generator and electrical transformer will also be furnished and installed on newly constructed elevated platforms adjoining the electrical building. This elevation will sit two (2) feet greater than the 100-year flood elevation.

This agreement provides $2,207,000 of funding with the City providing a 1:1 match of $2,207,000 for a total of $4,414,000 for total project costs. This is a cost-reimbursement grant.

This agreement will be in effect from 07/01/2025-06/30/2028.

The agreement document is attached.

The City Attorney has reviewed this document.

STATE OF FLORIDA
DEPARTMENT OF ENVIRONMENTAL PROTECTION
Standard Grant Agreement

This Agreement is entered into between the Parties named below, pursuant to section 215.971, Florida Statutes:

1. Project Title (Project): Agreement Number:

Tarpon Springs Wastewater Treatment Electrical Resiliency Project 26SRP16

2. Parties **State of Florida Department of Environmental Protection, 3900 Commonwealth Boulevard Tallahassee, Florida 32399-3000** (Department)

Grantee Name: City of Tarpon Springs Entity Type: Local Government

Grantee Address: 324 Pine Street, Tarpon Springs, Florida 34689-4004 FEID: 59-6000437

(Grantee)

3. Agreement Begin Date: 7/1/2025 Date of Expiration: 6/30/2028

4. Project Number: *(If different from Agreement Number)* Project Location(s): Pinellas County, Florida

Project Description: The Project will include rebuilding, relocating, and elevating the electrical systems for the City of Tarpon Springs Advanced Wastewater Treatment Plant.

5. Total Amount of Funding: $2,207,000.00

Funding Source?	Award #s or Line-Item Appropriations:	Amount per Source(s):
☑ State ☐ Federal	FY 25-26 GAA Line Item #1658	$ 2,207,000.00
☐ State ☐ Federal		$
☐ State ☐ Federal		$
☑ Grantee Match		$ 2,207,000.00
	Total Amount of Funding + Grantee Match, if any:	$ 4,414,000.00

6. Department's Grant Manager

Name: Matthew Behnke or successor

Address: Resilient Florida Program
3900 Commonwealth Boulevard, MS230
Tallahassee, Florida 32399

Phone: 850-245-8305

Email: Matthew.Behnke@FloridaDEP.gov

Grantee's Grant Manager

Name: Paulette Harbert or successor

Address: City of Tarpon Springs
324 East Pine Street
Tarpon Springs, Florida 34689

Phone: 330-207-0098

Email: Pharbert@ctsfl.us

7. The Parties agree to comply with the terms and conditions of the following attachments and exhibits which are hereby incorporated by reference:

☑ Attachment 1: Standard Terms and Conditions Applicable to All Grants Agreements
☑ Attachment 2: Special Terms and Conditions
☑ Attachment 3: Grant Work Plan
☑ Attachment 4: Public Records Requirements
☑ Attachment 5: Special Audit Requirements
☑ Attachment 6: Program-Specific Requirements
☐ Attachment 7: Grant Award Terms (Federal) *Copy available at https://facts.fldfs.com, in accordance with section 215.985, F.S.
☐ Attachment 8: Federal Regulations and Terms (Federal)
☐ Additional Attachments (if necessary):
☑ Exhibit A: Progress Report Form
☑ Exhibit B: Property Reporting Form
☑ Exhibit C: Payment Request Summary Form
☐ Exhibit D: Quality Assurance Requirements
☐ Exhibit E: Advance Payment Terms and Interest Earned Memo
☑ Exhibit J: Common Carrier or Contracted Carrier Attestation Form PUR1808

☑ Additional Exhibits (if necessary): Exhibit F: Final Project Report, Exhibit G: Photographer Release Form, Exhibit H: Contractual Services Certification	
8. The following information applies to Federal Grants only and is identified in accordance with 2 CFR 200.331 (a) (1):	
Federal Award Identification Number(s) (FAIN):	
Unique Entity Identifier (UEI):	
Federal Award Date to Department:	
Federal Award Project Description:	
Total Federal Funds Obligated by this Agreement:	
Federal Awarding Agency:	
Award R&D?	☐ Yes ☑N/A

IN WITNESS WHEREOF, this Agreement shall be effective on the date indicated by the Agreement Begin Date unless another date is specified in the grant documents.

City of Tarpon Springs **GRANTEE**

Grantee Name

By

(*Authorized Signature)* Date Signed

John Koulianos, Mayor

Print Name and Title of Person Signing

State of Florida Department of Environmental Protection **DEPARTMENT**

By

Secretary or Designee Date Signed

Alex Reed, Director of the Office of Resilience and Coastal Protection

Print Name and Title of Person Signing

☑ Additional signatures attached on separate page.

ORCP Additional Signatures

_____
DEP Grant Manager, Matthew Behnke

_____
DEP QC Reviewer, Katharine Hoover

Grantee may add additional signatures below, if needed.

STATE OF FLORIDA
DEPARTMENT OF ENVIRONMENTAL PROTECTION
STANDARD TERMS AND CONDITIONS
APPLICABLE TO GRANT AGREEMENTS

ATTACHMENT 1

1. Entire Agreement.

This Grant Agreement, including any Attachments and Exhibits referred to herein and/or attached hereto (Agreement), constitutes the entire agreement between the parties with respect to the subject matter hereof and supersedes all prior agreements, whether written or oral, with respect to such subject matter. Any terms and conditions included on Grantee's forms or invoices shall be null and void.

2. Grant Administration.

a. Order of Precedence. If there are conflicting provisions among the documents that make up the Agreement, the order of precedence for interpretation of the Agreement is as follows:
   i. Standard Grant Agreement
   ii. Attachments other than Attachment 1, in numerical order as designated in the Standard Grant Agreement
   iii. Attachment 1, Standard Terms and Conditions
   iv. The Exhibits in the order designated in the Standard Grant Agreement

b. All approvals, written or verbal, and other written communication among the parties, including all notices, shall be obtained by or sent to the parties' Grant Managers. All written communication shall be by electronic mail, U.S. Mail, a courier delivery service, or delivered in person. Notices shall be considered delivered when reflected by an electronic mail read receipt, a courier service delivery receipt, other mail service delivery receipt, or when receipt is acknowledged by recipient. If the notice is delivered in multiple ways, the notice will be considered delivered at the earliest delivery time.

c. If a different Grant Manager is designated by either party after execution of this Agreement, notice of the name and contact information of the new Grant Manager will be submitted in writing to the other party and maintained in the respective parties' records. A change of Grant Manager does not require a formal amendment or change order to the Agreement.

d. This Agreement may be amended, through a formal amendment or a change order, only by a written agreement between both parties. A formal amendment to this Agreement is required for changes which cause any of the following:
   (1) an increase or decrease in the Agreement funding amount;
   (2) a change in Grantee's match requirements;
   (3) a change in the expiration date of the Agreement;
   (4) changes to the cumulative amount of funding transfers between approved budget categories, as defined in Attachment 3, Grant Work Plan, that exceeds or is expected to exceed twenty percent (20%) of the total budget as last approved by Department; and/or
   (5) any changes to the terms and conditions of the Agreement other than the specific instances enumerated below when a change order may be used.
   A change order to this Agreement may be used when:
   (1) task timelines within the current authorized Agreement period change;
   (2) the cumulative transfer of funds between approved budget categories, as defined in Attachment 3, Grant Work Plan, are less than twenty percent (20%) of the total budget as last approved by Department;
   (3) changing the current funding source as stated in the Standard Grant Agreement; and/or
   (4) fund transfers between budget categories for the purposes of meeting match requirements.
   This Agreement may be amended to provide for additional services if additional funding is made available by the Legislature.

e. All days in this Agreement are calendar days unless otherwise specified.

3. Agreement Duration.

The term of the Agreement shall begin and end on the dates indicated in the Standard Grant Agreement, unless extended or terminated earlier in accordance with the applicable terms and conditions. The Grantee shall be eligible for reimbursement for work performed on or after the date of execution through the expiration date of this Agreement, unless otherwise specified in Attachment 2, Special Terms and Conditions. However, work performed prior to the

execution of this Agreement may be reimbursable or used for match purposes if permitted by the Special Terms and Conditions.

4. Deliverables.

The Grantee agrees to render the services or other units of deliverables as set forth in Attachment 3, Grant Work Plan. The services or other units of deliverables shall be delivered in accordance with the schedule and at the pricing outlined in the Grant Work Plan. Deliverables may be comprised of activities that must be completed prior to Department making payment on that deliverable. The Grantee agrees to perform in accordance with the terms and conditions set forth in this Agreement and all attachments and exhibits incorporated by the Standard Grant Agreement.

5. Performance Measures.

The Grantee warrants that: (1) the services will be performed by qualified personnel; (2) the services will be of the kind and quality described in the Grant Work Plan; (3) the services will be performed in a professional and workmanlike manner in accordance with industry standards and practices; (4) the services shall not and do not knowingly infringe upon the intellectual property rights, or any other proprietary rights, of any third party; and (5) its employees, subcontractors, and/or subrecipients shall comply with any security and safety requirements and processes, if provided by Department, for work done at the Project Location(s). The Department reserves the right to investigate or inspect at any time to determine whether the services or qualifications offered by Grantee meet the Agreement requirements. Notwithstanding any provisions herein to the contrary, written acceptance of a particular deliverable does not foreclose Department's remedies in the event deficiencies in the deliverable cannot be readily measured at the time of delivery.

6. Acceptance of Deliverables.

a. Acceptance Process. All deliverables must be received and accepted in writing by Department's Grant Manager before payment. The Grantee shall work diligently to correct all deficiencies in the deliverable that remain outstanding, within a reasonable time at Grantee's expense. If Department's Grant Manager does not accept the deliverables within 30 days of receipt, they will be deemed rejected.

b. Rejection of Deliverables. The Department reserves the right to reject deliverables, as outlined in the Grant Work Plan, as incomplete, inadequate, or unacceptable due, in whole or in part, to Grantee's lack of satisfactory performance under the terms of this Agreement. The Grantee's efforts to correct the rejected deliverables will be at Grantee's sole expense. Failure to fulfill the applicable technical requirements or complete all tasks or activities in accordance with the Grant Work Plan will result in rejection of the deliverable and the associated invoice. Payment for the rejected deliverable will not be issued unless the rejected deliverable is made acceptable to Department in accordance with the Agreement requirements. The Department, at its option, may allow additional time within which Grantee may remedy the objections noted by Department. The Grantee's failure to make adequate or acceptable deliverables after a reasonable opportunity to do so shall constitute an event of default.

7. Financial Consequences for Nonperformance.

a. Withholding Payment. In addition to the specific consequences explained in the Grant Work Plan and/or Special Terms and Conditions, the State of Florida (State) reserves the right to withhold payment when the Grantee has failed to perform/comply with provisions of this Agreement. None of the financial consequences for nonperformance in this Agreement as more fully described in the Grant Work Plan shall be considered penalties.

b. Invoice reduction
If Grantee does not meet a deadline for any deliverable, the Department will reduce the invoice by 1% for each day the deadline is missed, unless an extension is approved in writing by the Department.

c. Corrective Action Plan. If Grantee fails to correct all the deficiencies in a rejected deliverable within the specified timeframe, Department may, in its sole discretion, request that a proposed Corrective Action Plan (CAP) be submitted by Grantee to Department. The Department requests that Grantee specify the outstanding deficiencies in the CAP. All CAPs must be able to be implemented and performed in no more than sixty (60) calendar days.
    i. The Grantee shall submit a CAP within ten (10) days of the date of the written request from Department. The CAP shall be sent to the Department's Grant Manager for review and approval. Within ten (10) days of receipt of a CAP, Department shall notify Grantee in writing whether the CAP proposed has been accepted. If the CAP is not accepted, Grantee shall have ten (10) days from receipt of Department letter rejecting the proposal to submit a revised proposed CAP. Failure to obtain Department approval of a CAP as specified above may result in Department's termination of this Agreement for cause as authorized in this Agreement.

ii. Upon Department's notice of acceptance of a proposed CAP, Grantee shall have ten (10) days to commence implementation of the accepted plan. Acceptance of the proposed CAP by Department does not relieve Grantee of any of its obligations under the Agreement. In the event the CAP fails to correct or eliminate performance deficiencies by Grantee, Department shall retain the right to require additional or further remedial steps, or to terminate this Agreement for failure to perform. No actions approved by Department or steps taken by Grantee shall preclude Department from subsequently asserting any deficiencies in performance. The Grantee shall continue to implement the CAP until all deficiencies are corrected. Reports on the progress of the CAP will be made to Department as requested by Department's Grant Manager.

iii. Failure to respond to a Department request for a CAP or failure to correct a deficiency in the performance of the Agreement as specified by Department may result in termination of the Agreement.

8. Payment.

a. Payment Process. Subject to the terms and conditions established by the Agreement, the pricing per deliverable established by the Grant Work Plan, and the billing procedures established by Department, Department agrees to pay Grantee for services rendered in accordance with section 215.422, Florida Statutes (F.S.).

b. Taxes. The Department is exempted from payment of State sales, use taxes and Federal excise taxes. The Grantee, however, shall not be exempted from paying any taxes that it is subject to, including State sales and use taxes, or for payment by Grantee to suppliers for taxes on materials used to fulfill its contractual obligations with Department. The Grantee shall not use Department's exemption number in securing such materials. The Grantee shall be responsible and liable for the payment of all its FICA/Social Security and other taxes resulting from this Agreement.

c. Maximum Amount of Agreement. The maximum amount of compensation under this Agreement, without an amendment, is described in the Standard Grant Agreement. Any additional funds necessary for the completion of this Project are the responsibility of Grantee.

d. Reimbursement for Costs. The Grantee shall be paid on a cost reimbursement basis for all eligible Project costs upon the completion, submittal, and approval of each deliverable identified in the Grant Work Plan. Reimbursement shall be requested on Exhibit C, Payment Request Summary Form. To be eligible for reimbursement, costs must be in compliance with laws, rules, and regulations applicable to expenditures of State funds, including, but not limited to, the Reference Guide for State Expenditures, which can be accessed at the following web address: https://www.myfloridacfo.com/docs-sf/accounting-and-auditing-libraries/state-agencies/reference-guide-for-state-expenditures.pdf.

e. Rural Communities and Rural Areas of Opportunity. If Grantee is a county or municipality that qualifies as a "rural community" or "rural area of opportunity" (RAO) as defined in subsection 288.0656(2), F.S., such Grantee may request from the Department that all invoice payments under this Agreement be directed to the relevant county or municipality or to the RAO itself. The Department will agree to Grantee's request if:

i. Grantee demonstrates that it is a county or municipality that qualifies as a "rural community" or "rural area of opportunity" under subsection 288.0656(2), F.S.;

ii. Grantee demonstrates current financial hardship using one (1) or more of the "economic distress" factors defined in subsection 288.0656(2)(c), F.S.;

iii. Grantee's performance has been verified by the Department, which has determined that Grantee is eligible for invoice payments and that Grantee's performance has been completed in accordance with this Agreement's terms and conditions; and

iv. Applicable federal and state law(s), rule(s) and regulation(s) allow for such payments.

This subsection may not be construed to alter or limit any other applicable provisions of federal or state law, rule, or regulation. A current list of Florida's designated RAOs can be accessed at the following web address: https://floridajobs.org/community-planning-and-development/rural-community-programs/rural-areas-of-opportunity.

f. Invoice Detail. All charges for services rendered or for reimbursement of expenses authorized by Department pursuant to the Grant Work Plan shall be submitted to Department in sufficient detail for a proper pre-audit and post-audit to be performed. The Grantee shall only invoice Department for deliverables that are completed in accordance with the Grant Work Plan.

g. State Funds Documentation. Pursuant to section 216.1366, F.S., if Grantee meets the definition of a non-profit organization under section 215.97(2)(m), F.S., Grantee must provide the Department with documentation that indicates the amount of state funds:

i. Allocated to be used during the full term of the contract or agreement for remuneration to any member of the board of directors or an officer.
ii. Allocated under each payment by the public agency to be used for remuneration of any member of the board of directors or an officer.

The documentation must indicate the amounts and recipients of the remuneration. Such information must be posted on the State's the contract tracking system and maintained pursuant to section 215.985, F.S., and must be posted on the Grantee's website, if Grantee maintains a website.

h. Interim Payments. Interim payments may be made by Department, at its discretion, if the completion of deliverables to date have first been accepted in writing by Department's Grant Manager.

i. Final Payment Request. A final payment request should be submitted to Department no later than sixty (60) days following the expiration date of the Agreement to ensure the availability of funds for payment. However, all work performed pursuant to the Grant Work Plan must be performed on or before the expiration date of the Agreement.

j. Annual Appropriation Contingency. The State's performance and obligation to pay under this Agreement is contingent upon an annual appropriation by the Legislature. This Agreement is not a commitment of future appropriations. Authorization for continuation and completion of work and any associated payments may be rescinded, with proper notice, at the discretion of Department if the Legislature reduces or eliminates appropriations.

k. Interest Rates. All interest rates charged under the Agreement shall be calculated on the prevailing rate used by the State Board of Administration. To obtain the applicable interest rate, please refer to: https://www.myfloridacfo.com/division/aa/local-governments/judgement-interest-rates.

l. Refund of Payments to the Department. Any balance of unobligated funds that have been advanced or paid must be refunded to Department. Any funds paid in excess of the amount to which Grantee or subgrantee is entitled under the terms of the Agreement must be refunded to Department. If this Agreement is funded with federal funds and the Department is required to refund the federal government, the Grantee shall refund the Department its share of those funds.

9. Documentation Required for Cost Reimbursement Grant Agreements and Match.

If Cost Reimbursement or Match is authorized in Attachment 2, Special Terms and Conditions, the following conditions apply. Supporting documentation must be provided to substantiate cost reimbursement or match requirements for the following budget categories:

a. Salary/Wages. Grantee shall list personnel involved, position classification, direct salary rates, and hours spent on the Project in accordance with Attachment 3, Grant Work Plan in their documentation for reimbursement or match requirements.

b. Overhead/Indirect/General and Administrative Costs. If Grantee is being reimbursed for or claiming match for multipliers, all multipliers used (i.e., fringe benefits, overhead, indirect, and/or general and administrative rates) shall be supported by audit. If Department determines that multipliers charged by Grantee exceeded the rates supported by audit, Grantee shall be required to reimburse such funds to Department within thirty (30) days of written notification. Interest shall be charged on the excessive rate.

c. Contractual/Subaward Costs (Subcontractors/Subrecipients). Match or reimbursement requests for payments to subcontractors/subrecipients must be substantiated by copies of invoices with backup documentation identical to that required from Grantee. Subcontracts/subawards which involve payments for direct salaries shall clearly identify the personnel involved, salary rate per hour, and hours spent on the Project. All eligible multipliers used (i.e., fringe benefits, overhead, indirect, and/or general and administrative rates) shall be supported by audit. If Department determines that multipliers charged by any subcontractor/subrecipient exceeded the rates supported by audit, Grantee shall be required to reimburse such funds to Department within thirty (30) days of written notification. Interest shall be charged on the excessive rate. Nonconsumable and/or nonexpendable personal property or equipment costing $5,000 or more purchased for the Project under a subcontract/subaward is subject to the requirements set forth in chapters 273 and/or 274, F.S., and Chapter 69I-72, Florida Administrative Code (F.A.C.) and/or Chapter 69I-73, F.A.C., as applicable. For grants funded with federal funds, nonconsumable and/or nonexpendable personal property or equipment costing $10,000 or more purchased for the Project under a subcontract/subaward is subject to the requirements set forth in 2 CFR 200. The Grantee shall be responsible for maintaining appropriate property records for any subcontracts/subawards that include the purchase of equipment as part of the delivery of services. The Grantee shall comply with this requirement and ensure its subcontracts/subaward issued under this Agreement, if any, impose this requirement, in writing, on its subcontractors/subrecipients.

i. For fixed-price (vendor) subcontracts/subawards, the following provisions shall apply: The Grantee may award, on a competitive basis, fixed-price subcontracts/subawards to consultants/contractors in performing the work described in Attachment 3, Grant Work Plan. Invoices submitted to Department for fixed-price subcontracted/subawarded activities shall be supported with a copy of the subcontractor/subrecipient's invoice and a copy of the tabulation form for the competitive procurement process (e.g., Invitation to Bid, Request for Proposals, or other similar competitive procurement document) resulting in the fixed-price subcontract/subaward. The Grantee may request approval from Department to award a fixed-price subcontract/subaward resulting from procurement methods other than those identified above. In this instance, Grantee shall request the advance written approval from Department's Grant Manager of the fixed price negotiated by Grantee. The letter of request shall be supported by a detailed budget and Scope of Services to be performed by the subcontractor/subrecipient. Upon receipt of Department Grant Manager's approval of the fixed-price amount, Grantee may proceed in finalizing the fixed-price subcontract/subaward.

ii. If the procurement is subject to the Consultant's Competitive Negotiation Act under section 287.055, F.S., or the Brooks Act, Grantee must provide documentation clearly evidencing it has complied with the statutory or federal requirements.

d. Travel. All requests for match or reimbursement of travel expenses shall be in accordance with section 112.061, F.S.

e. Direct Purchase Equipment. For grants funded fully or in part with state funds, equipment is defined as capital outlay costing $5,000 or more. For grants funded fully with federal funds, equipment is defined as capital outlay costing $10,000 or more. Match or reimbursement for Grantee's direct purchase of equipment is subject to specific approval of Department and does not include any equipment purchased under the delivery of services to be completed by a subcontractor/subrecipient. Include copies of invoices or receipts to document purchases, and a properly completed Exhibit B, Property Reporting Form**.**

f. Rental/Lease of Equipment. Match or reimbursement requests for rental/lease of equipment must include copies of invoices or receipts to document charges.

g. Miscellaneous/Other Expenses. If miscellaneous or other expenses, such as materials, supplies, non-excluded phone expenses, reproduction, or mailing, are reimbursable or available for match or reimbursement under the terms of this Agreement, the documentation supporting these expenses must be itemized and include copies of receipts or invoices. Additionally, independent of Grantee's contract obligations to its subcontractor/subrecipient, Department shall not reimburse any of the following types of charges: cell phone usage; attorney's fees or court costs; civil or administrative penalties; or handling fees, such as set percent overages associated with purchasing supplies or equipment.

h. Land Acquisition. Reimbursement for the costs associated with acquiring interest and/or rights to real property (including access rights through ingress/egress easements, leases, license agreements, or other site access agreements; and/or obtaining record title ownership of real property through purchase) must be supported by the following, as applicable: Copies of Property Appraisals, Environmental Site Assessments, Surveys and Legal Descriptions, Boundary Maps, Acreage Certification, Title Search Reports, Title Insurance, Closing Statements/Documents, Deeds, Leases, Easements, License Agreements, or other legal instrument documenting acquired property interest and/or rights. If land acquisition costs are used to meet match requirements, Grantee agrees that those funds shall not be used as match for any other Agreement supported by State or Federal funds.

10. Status Reports.

The Grantee shall submit status reports quarterly, unless otherwise specified in the Attachments, on Exhibit A, Progress Report Form**,** to Department's Grant Manager describing the work performed during the reporting period, problems encountered, problem resolutions, scheduled updates, and proposed work for the next reporting period. Quarterly status reports are due no later than twenty (20) days following the completion of the quarterly reporting period. For the purposes of this reporting requirement, the quarterly reporting periods end on March 31, June 30, September 30 and December 31. The Department will review the required reports submitted by Grantee within thirty (30) days.

11. Retainage.

The following provisions apply if Department withholds retainage under this Agreement:

a. The Department reserves the right to establish the amount and application of retainage on the work performed under this Agreement up to the maximum percentage described in Attachment 2, Special Terms and Conditions. Retainage may be withheld from each payment to Grantee pending satisfactory completion of work and approval of all deliverables.

b. If Grantee fails to perform the requested work or fails to perform the work in a satisfactory manner, Grantee shall forfeit its right to payment of the retainage associated with the work. Failure to perform includes, but is not limited to, failure to submit the required deliverables or failure to provide adequate documentation that the work was actually performed. The Department shall provide written notification to Grantee of the failure to perform that shall result in retainage forfeiture. If the Grantee does not correct the failure to perform within the timeframe stated in Department's notice, the retainage will be forfeited to Department.
c. No retainage shall be released or paid for incomplete work while this Agreement is suspended.
d. Except as otherwise provided above, Grantee shall be paid the retainage associated with the work, provided Grantee has completed the work and submits an invoice for retainage held in accordance with the invoicing procedures under this Agreement.

12. Insurance.

a. Insurance Requirements for Subrecipients and/or Subcontractors. The Grantee shall require its subrecipients and/or subcontractors, if any, to maintain insurance coverage of such types and with such terms and limits as described in this Agreement. The Grantee shall require all its subrecipients and/or subcontractors, if any, to make compliance with the insurance requirements of this Agreement a condition of all contracts that are related to this Agreement. Subrecipients and/or subcontractors must provide proof of insurance upon request.
b. Deductibles. The Department shall be exempt from, and in no way liable for, any sums of money representing a deductible in any insurance policy. The payment of such deductible shall be the sole responsibility of the Grantee providing such insurance.
c. Proof of Insurance. Upon execution of this Agreement, Grantee shall provide Department documentation demonstrating the existence and amount for each type of applicable insurance coverage ***prior to*** performance of any work under this Agreement. Upon receipt of written request from Department, Grantee shall furnish Department with proof of applicable insurance coverage by standard form certificates of insurance, a self-insured authorization, or other certification of self-insurance.
d. Duty to Maintain Coverage. In the event that any applicable coverage is cancelled by the insurer for any reason, or if Grantee cannot get adequate coverage, Grantee shall immediately notify Department of such cancellation and shall obtain adequate replacement coverage conforming to the requirements herein and provide proof of such replacement coverage within ten (10) days after the cancellation of coverage.
e. Insurance Trust. If the Grantee's insurance is provided through an insurance trust, the Grantee shall instead add the Department of Environmental Protection, its employees, and officers as an additional covered party everywhere the Agreement requires them to be added as an additional insured.

13. Termination.

a. Termination for Convenience. When it is in the State's best interest, Department may, at its sole discretion, terminate the Agreement in whole or in part by giving 30 days' written notice to Grantee. The Department shall notify Grantee of the termination for convenience with instructions as to the effective date of termination or the specific stage of work at which the Agreement is to be terminated. The Grantee must submit all invoices for work to be paid under this Agreement within thirty (30) days of the effective date of termination. The Department shall not pay any invoices received after thirty (30) days of the effective date of termination.
b. Termination for Cause. The Department may terminate this Agreement if any of the events of default described in the Events of Default provisions below occur or in the event that Grantee fails to fulfill any of its other obligations under this Agreement. If, after termination, it is determined that Grantee was not in default, or that the default was excusable, the rights and obligations of the parties shall be the same as if the termination had been issued for the convenience of Department. The rights and remedies of Department in this clause are in addition to any other rights and remedies provided by law or under this Agreement.
c. Grantee Obligations upon Notice of Termination. After receipt of a notice of termination or partial termination unless as otherwise directed by Department, Grantee shall not furnish any service or deliverable on the date, and to the extent specified, in the notice. However, Grantee shall continue work on any portion of the Agreement not terminated. If the Agreement is terminated before performance is completed, Grantee shall be paid only for that work satisfactorily performed for which costs can be substantiated. The Grantee shall not be entitled to recover any cancellation charges or lost profits.
d. Continuation of Prepaid Services. If Department has paid for any services prior to the expiration, cancellation, or termination of the Agreement, Grantee shall continue to provide Department with those services for which it has already been paid or, at Department's discretion, Grantee shall provide a refund for services that have been paid for but not rendered.

e. Transition of Services Upon Termination, Expiration, or Cancellation of the Agreement. If services provided under the Agreement are being transitioned to another provider(s), Grantee shall assist in the smooth transition of Agreement services to the subsequent provider(s). This requirement is at a minimum an affirmative obligation to cooperate with the new provider(s), however additional requirements may be outlined in the Grant Work Plan. The Grantee shall not perform any services after Agreement expiration or termination, except as necessary to complete the transition or continued portion of the Agreement, if any.

14. Notice of Default.

If Grantee defaults in the performance of any covenant or obligation contained in the Agreement, including, any of the events of default, Department shall provide notice to Grantee and an opportunity to cure that is reasonable under the circumstances. This notice shall state the nature of the failure to perform and provide a time certain for correcting the failure. The notice will also provide that, should the Grantee fail to perform within the time provided, Grantee will be found in default, and Department may terminate the Agreement effective as of the date of receipt of the default notice.

15. Events of Default.

Provided such failure is not the fault of Department or outside the reasonable control of Grantee, the following non-exclusive list of events, acts, or omissions, shall constitute events of default:

a. The commitment of any material breach of this Agreement by Grantee, including failure to timely deliver a material deliverable, failure to perform the minimal level of services required for a deliverable, discontinuance of the performance of the work, failure to resume work that has been discontinued within a reasonable time after notice to do so, or abandonment of the Agreement;
b. The commitment of any material misrepresentation or omission in any materials, or discovery by the Department of such, made by the Grantee in this Agreement or in its application for funding;
c. Failure to submit any of the reports required by this Agreement or having submitted any report with incorrect, incomplete, or insufficient information;
d. Failure to honor any term of the Agreement;
e. Failure to abide by any statutory, regulatory, or licensing requirement, including an entry of an order revoking the certificate of authority granted to the Grantee by a state or other licensing authority;
f. Failure to pay any and all entities, individuals, and furnishing labor or materials, or failure to make payment to any other entities as required by this Agreement;
g. Employment of an unauthorized alien in the performance of the work, in violation of Section 274 (A) of the Immigration and Nationality Act;
h. Failure to maintain the insurance required by this Agreement;
i. One or more of the following circumstances, uncorrected for more than thirty (30) days unless, within the specified 30-day period, Grantee (including its receiver or trustee in bankruptcy) provides to Department adequate assurances, reasonably acceptable to Department, of its continuing ability and willingness to fulfill its obligations under the Agreement:
    i. Entry of an order for relief under Title 11 of the United States Code;
    ii. The making by Grantee of a general assignment for the benefit of creditors;
    iii. The appointment of a general receiver or trustee in bankruptcy of Grantee's business or property; and/or
    iv. An action by Grantee under any state insolvency or similar law for the purpose of its bankruptcy, reorganization, or liquidation.

16. Suspension of Work.

The Department may, in its sole discretion, suspend any or all activities under the Agreement, at any time, when it is in the best interest of the State to do so. The Department shall provide Grantee written notice outlining the particulars of suspension. Examples of reasons for suspension include, but are not limited to, budgetary constraints, declaration of emergency, or other such circumstances. After receiving a suspension notice, Grantee shall comply with the notice. Within 90 days, or any longer period agreed to by the parties, Department shall either: (1) issue a notice authorizing resumption of work, at which time activity shall resume; or (2) terminate the Agreement. If the Agreement is terminated after 30 days of suspension, the notice of suspension shall be deemed to satisfy the thirty (30) days' notice required for a notice of termination for convenience. Suspension of work shall not entitle Grantee to any additional compensation.

17. Force Majeure.

The Grantee shall not be responsible for delay resulting from its failure to perform if neither the fault nor the negligence of Grantee or its employees or agents contributed to the delay and the delay is due directly to acts of God, wars, acts

of public enemies, strikes, fires, floods, or other similar cause wholly beyond Grantee's control, or for any of the foregoing that affect subcontractors/subrecipients or suppliers if no alternate source of supply is available to Grantee. In case of any delay Grantee believes is excusable, Grantee shall notify Department in writing of the delay or potential delay and describe the cause of the delay either (1) within ten days after the cause that creates or will create the delay first arose, if Grantee could reasonably foresee that a delay could occur as a result; or (2) if delay is not reasonably foreseeable, within five days after the date Grantee first had reason to believe that a delay could result. **THE FOREGOING SHALL CONSTITUTE THE GRANTEE'S SOLE REMEDY OR EXCUSE WITH RESPECT TO DELAY**. Providing notice in strict accordance with this paragraph is a condition precedent to such remedy. No claim for damages, other than for an extension of time, shall be asserted against Department. The Grantee shall not be entitled to an increase in the Agreement price or payment of any kind from Department for direct, indirect, consequential, impact or other costs, expenses or damages, including but not limited to costs of acceleration or inefficiency, arising because of delay, disruption, interference, or hindrance from any cause whatsoever. If performance is suspended or delayed, in whole or in part, due to any of the causes described in this paragraph, after the causes have ceased to exist Grantee shall perform at no increased cost, unless Department determines, in its sole discretion, that the delay will significantly impair the value of the Agreement to Department, in which case Department may: (1) accept allocated performance or deliveries from Grantee, provided that Grantee grants preferential treatment to Department with respect to products subjected to allocation; (2) contract with other sources (without recourse to and by Grantee for the related costs and expenses) to replace all or part of the products or services that are the subject of the delay, which purchase may be deducted from the Agreement quantity; or (3) terminate Agreement in whole or in part.

18. Indemnification.

a. The Grantee shall be fully liable for the actions of its agents, employees, partners, and subcontractors/subrecipients and shall fully indemnify, defend, and hold harmless Department and its officers, agents, and employees, from suits, actions, damages, and costs of every name and description arising from or relating to:
    i. personal injury and damage to real or personal tangible property alleged to be caused in whole or in part by Grantee, its agents, employees, partners, and subcontractors/subrecipients; provided, however, that Grantee shall not indemnify for that portion of any loss or damages proximately caused by the negligent act or omission of Department;
    ii. the Grantee's breach of this Agreement or the negligent acts or omissions of Grantee.

b. The Grantee's obligations under the preceding paragraph with respect to any legal action are contingent upon Department giving Grantee: (1) written notice of any action or threatened action; (2) the opportunity to take over and settle or defend any such action at Grantee's sole expense; and (3) assistance in defending the action at Grantee's sole expense. The Grantee shall not be liable for any cost, expense, or compromise incurred or made by Department in any legal action without Grantee's prior written consent, which shall not be unreasonably withheld.

c. Notwithstanding sections a. and b. above, the following is the sole indemnification provision that applies to Grantees that are governmental entities: Each party hereto agrees that it shall be solely responsible for the negligent or wrongful acts of its employees and agents. However, nothing contained herein shall constitute a waiver by either party of its sovereign immunity or the provisions of section 768.28, F.S. Further, nothing herein shall be construed as consent by a state agency or subdivision of the State to be sued by third parties in any matter arising out of any contract or this Agreement.

d. No provision in this Agreement shall require Department to hold harmless or indemnify Grantee, insure or assume liability for Grantee's negligence, waive Department's sovereign immunity under the laws of Florida, or otherwise impose liability on Department for which it would not otherwise be responsible. Any provision, implication or suggestion to the contrary is null and void.

19. Limitation of Liability.

The Department's liability for any claim arising from this Agreement is limited to compensatory damages in an amount no greater than the sum of the unpaid balance of compensation due for goods or services rendered pursuant to and in compliance with the terms of the Agreement. Such liability is further limited to a cap of $100,000.

20. Remedies.

Nothing in this Agreement shall be construed to make Grantee liable for force majeure events. Nothing in this Agreement, including financial consequences for nonperformance, shall limit Department's right to pursue its remedies for other types of damages under the Agreement, at law or in equity. The Department may, in addition to

other remedies available to it, at law or in equity and upon notice to Grantee, retain such monies from amounts due Grantee as may be necessary to satisfy any claim for damages, penalties, costs and the like asserted by or against it.

21. Waiver.

The delay or failure by Department to exercise or enforce any of its rights under this Agreement shall not constitute or be deemed a waiver of Department's right thereafter to enforce those rights, nor shall any single or partial exercise of any such right preclude any other or further exercise thereof or the exercise of any other right.

22. Statutory Notices Relating to Unauthorized Employment and Subcontracts/Subawards.

a. The Department shall consider the employment by any Grantee of unauthorized aliens a violation of Section 274A(e) of the Immigration and Nationality Act. If Grantee/subcontractor/subrecipient knowingly employs unauthorized aliens, such violation shall be cause for unilateral cancellation of this Agreement. The Grantee shall be responsible for including this provision in all subcontracts/subawards with private organizations issued as a result of this Agreement.

b. Pursuant to sections 287.133, 287.134, and 287.137 F.S., the following restrictions apply to persons placed on the convicted vendor list, discriminatory vendor list, or the antitrust violator vendor list:

   i. Public Entity Crime. A person or affiliate who has been placed on the convicted vendor list following a conviction for a public entity crime may not submit a bid, proposal, or reply on a contract to provide any goods or services to a public entity; may not submit a bid, proposal, or reply on a contract with a public entity for the construction or repair of a public building or public work; may not submit bids, proposals, or replies on leases of real property to a public entity; may not be awarded or perform work as a Grantee, supplier, subcontractor, or consultant under a contract with any public entity; and may not transact business with any public entity in excess of the threshold amount provided in section 287.017, F.S., for CATEGORY TWO for a period of 36 months following the date of being placed on the convicted vendor list.

   ii. Discriminatory Vendors. An entity or affiliate who has been placed on the discriminatory vendor list may not submit a bid, proposal, or reply on a contract to provide any goods or services to a public entity; may not submit a bid, proposal, or reply on a contract with a public entity for the construction or repair of a public building or public work; may not submit bids, proposals, or replies on leases of real property to a public entity; may not be awarded or perform work as a contractor, supplier, subcontractor, or consultant under a contract with any public entity; and may not transact business with any public entity.

   iii. Antitrust Violator Vendors. A person or an affiliate who has been placed on the antitrust violator vendor list following a conviction or being held civilly liable for an antitrust violation may not submit a bid, proposal, or reply on any contract to provide any good or services to a public entity; may not submit a bid, proposal, or reply on any contract with a public entity for the construction or repair of a public building or public work; may not submit a bid, proposal, or reply on leases of real property to a public entity; may not be awarded or perform work as a Grantee, supplier, subcontractor, or consultant under a contract with a public entity; and may not transact new business with a public entity.

   iv. Notification. The Grantee shall notify Department if it or any of its suppliers, subcontractors, or consultants have been placed on the convicted vendor list, the discriminatory vendor list, or antitrust violator vendor list during the life of the Agreement. The Florida Department of Management Services is responsible for maintaining the discriminatory vendor list and the antitrust violator vendor list and posts the list on its website. Questions regarding the discriminatory vendor list or antitrust violator vendor list may be directed to the Florida Department of Management Services, Office of Supplier Development, at (850) 487-0915.

23. Compliance with Federal, State and Local Laws.

a. The Grantee and all its agents shall comply with all federal, state and local regulations, including, but not limited to, nondiscrimination, wages, social security, workers' compensation, licenses, and registration requirements. The Grantee shall include this provision in all subcontracts/subawards issued as a result of this Agreement.

b. The Grantee, its subrecipients, subcontractors and agents must also comply with the following civil rights laws and regulations:

   i. Title VI of the Civil Rights Act of 1964 as amended (prohibiting discrimination in federally assisted programs on the basis of race, color, or national origin in the delivery of services or benefits);

ii. Section 13 of the 1972 Amendment to the Federal Water Pollution Control Act (prohibiting discrimination on the basis of sex in the delivery of services or benefits under the Federal Water Pollution Control Act as amended);
iii. Section 504 of the Rehabilitation Act of 1973 (prohibiting discrimination in federally assisted programs on the basis of disability, both in employment and in the delivery of services and benefits);
iv. Age Discrimination Act of 1975 (prohibiting discrimination in federally assisted programs on the basis of age in the delivery of services or benefits);
v. 40 C.F.R. Part 7, (implementing Title VI of the Civil Rights Act of 1964, Section 13 of the 1972 Amendments to the Federal Water Pollution Control Act, and Section 504 of the Rehabilitation Act of 1973);
vi. Florida Civil Rights Act of 1992 (Title XLIV Chapter 760, Sections 760.01, 760.11 and 509.092, F.S.), including Part I, chapter 760, F.S. (prohibiting discrimination on the basis of race, color, religion, sex, pregnancy, national origin, age, handicap, or marital status).

c. This Agreement shall be governed by and construed in accordance with the laws of the State of Florida.
d. Any dispute concerning performance of the Agreement shall be processed as described herein. Jurisdiction for any damages arising under the terms of the Agreement will be in the courts of the State, and venue will be in the Second Judicial Circuit, in and for Leon County. Except as otherwise provided by law, the parties agree to be responsible for their own attorney fees incurred in connection with disputes arising under the terms of this Agreement.

24. Build America, Buy America Act (BABA) - Infrastructure Projects with Federal Funding.
This provision does not apply to Agreements that are wholly funded by Coronavirus State and Local Fiscal Recovery Funds under the American Rescue Plan Act. Also, this provision does not apply where there is a valid waiver in place. However, the provision may apply to funds expended before the waiver or after expiration of the waiver.
If applicable, Recipients or Subrecipients of an award of Federal financial assistance from a program for infrastructure are required to comply with the Build America, Buy America Act (BABA), including the following provisions:

a. All iron and steel used in the project are produced in the United States--this means all manufacturing processes, from the initial melting stage through the application of coatings, occurred in the United States;
b. All manufactured products used in the project are produced in the United States-this means the manufactured product was manufactured in the United States; and the cost of the components of the manufactured product that are mined, produced, or manufactured in the United States is greater than 55 percent of the total cost of all components of the manufactured product, unless another standard for determining the minimum amount of domestic content of the manufactured product has been established under applicable law or regulation; and
c. All construction materials are manufactured in the United States-this means that all manufacturing processes for the construction material occurred in the United States.

The Buy America preference only applies to articles, materials, and supplies that are consumed in, incorporated into, or affixed to an infrastructure project. As such, it does not apply to tools, equipment, and supplies, such as temporary scaffolding, brought to the construction site and removed at or before the completion of the infrastructure project. Nor does a Buy America preference apply to equipment and furnishings, such as movable chairs, desks, and portable computer equipment, that are used at or within the finished infrastructure project but are not an integral part of the structure or permanently affixed to the infrastructure project.

25. Investing in America
Grantees of an award for construction projects in whole or in part by the Bipartisan Infrastructure Law or the Inflation Reduction Act, including the following provision:

a. Signage Requirements
a. Investing in America Emblem: The recipient will ensure that a sign is placed at construction sites supported in whole or in part by this award displaying the official Investing in America emblem and must identify the project as a “project funded by President Biden’s Bipartisan Infrastructure Law” or “project funded by President Biden’s Inflation Reduction Act” as applicable. The sign must be placed at construction sites in an easily visible location that can be directly linked to the work taking place and must be maintained in good condition throughout the construction period.

The recipient will ensure compliance with the guidelines and design specifications provided by EPA for using the official Investing in America emblem available at: https://www.epa.gov/invest/investing-america-signage.

b. Procuring Signs: Consistent with section 6002 of RCRA, 42 U.S.C. 6962, and 2 CFR 200.323, recipients are encouraged to use recycled or recovered materials when procuring signs. Signage costs are considered an allowable cost under this assistance agreement provided that the costs associated with signage are reasonable. Additionally, to increase public awareness of projects serving communities where English is not the predominant language, recipients are encouraged to translate the language on signs (excluding the official Investing in America emblem or EPA logo or seal) into the appropriate non-English language(s). The costs of such translation are allowable, provided the costs are reasonable.

26. Scrutinized Companies.

a. Grantee certifies that it is not on the Scrutinized Companies that Boycott Israel List or engaged in a boycott of Israel. Pursuant to section 287.135, F.S., the Department may immediately terminate this Agreement at its sole option if the Grantee is found to have submitted a false certification; or if the Grantee is placed on the Scrutinized Companies that Boycott Israel List or is engaged in the boycott of Israel during the term of the Agreement.

b. If this Agreement is for more than one million dollars, the Grantee certifies that it is also not on the Scrutinized Companies with Activities in Sudan, Scrutinized Companies with Activities in the Iran Petroleum Energy Sector List, or engaged with business operations in Cuba or Syria as identified in section 287.135, F.S. Pursuant to section 287.135, F.S., the Department may immediately terminate this Agreement at its sole option if the Grantee is found to have submitted a false certification; or if the Grantee is placed on the Scrutinized Companies with Activities in Sudan List, or Scrutinized Companies with Activities in the Iran Petroleum Energy Sector List, or engaged with business operations in Cuba or Syria during the term of the Agreement.

c. As provided in subsection 287.135(8), F.S., if federal law ceases to authorize these contracting prohibitions, then they shall become inoperative.

27. Lobbying and Integrity.

The Grantee agrees that no funds received by it under this Agreement will be expended for the purpose of lobbying the Legislature or a State agency pursuant to section 216.347, F.S., except that pursuant to the requirements of section 287.058(6), F.S., during the term of any executed agreement between Grantee and the State, Grantee may lobby the executive or legislative branch concerning the scope of services, performance, term, or compensation regarding that agreement. The Grantee shall comply with sections 11.062 and 216.347, F.S.

28. Record Keeping.

The Grantee shall maintain books, records and documents directly pertinent to performance under this Agreement in accordance with United States generally accepted accounting principles (US GAAP) consistently applied. The Department, the State, or their authorized representatives shall have access to such records for audit purposes during the term of this Agreement and for five (5) years following the completion date or termination of the Agreement. In the event that any work is subcontracted or subawarded, Grantee shall similarly require each subcontractor/subrecipient to maintain and allow access to such records for audit purposes. Upon request of Department's Inspector General, or other authorized State official, Grantee shall provide any type of information the Inspector General deems relevant to Grantee's integrity or responsibility. Such information may include, but shall not be limited to, Grantee's business or financial records, documents, or files of any type or form that refer to or relate to Agreement. The Grantee shall retain such records for the longer of: (1) three years after the expiration of the Agreement; or (2) the period required by the General Records Schedules maintained by the Florida Department of State (available at: http://dos.myflorida.com/library-archives/records-management/general-records-schedules/).

29. Audits.

a. Inspector General. The Grantee understands its duty, pursuant to section 20.055(5), F.S., to cooperate with the inspector general in any investigation, audit, inspection, review, or hearing. The Grantee will comply with this duty and ensure that its subrecipients and/or subcontractors issued under this Agreement, if any, impose this requirement, in writing, on its subrecipients and/or subcontractors, respectively.

b. Physical Access and Inspection. Department personnel shall be given access to and may observe and inspect work being performed under this Agreement, with reasonable notice and during normal business hours, including by any of the following methods:

i. Grantee shall provide access to any location or facility on which Grantee is performing work, or storing or staging equipment, materials or documents;
ii. Grantee shall permit inspection of any facility, equipment, practices, or operations required in performance of any work pursuant to this Agreement; and,
iii. Grantee shall allow and facilitate sampling and monitoring of any substances, soils, materials or parameters at any location reasonable or necessary to assure compliance with any work or legal requirements pursuant to this Agreement.

c. Special Audit Requirements. The Grantee shall comply with the applicable provisions contained in Attachment 5, Special Audit Requirements. Each amendment that authorizes a funding increase or decrease shall include an updated copy of Exhibit 1, to Attachment 5. If Department fails to provide an updated copy of Exhibit 1 to include in each amendment that authorizes a funding increase or decrease, Grantee shall request one from the Department's Grants Manager. The Grantee shall consider the type of financial assistance (federal and/or state) identified in Attachment 5, Exhibit 1 and determine whether the terms of Federal and/or Florida Single Audit Act Requirements may further apply to lower tier transactions that may be a result of this Agreement. For federal financial assistance, Grantee shall utilize the guidance provided under 2 CFR §200.331 for determining whether the relationship represents that of a subrecipient or vendor. For State financial assistance, Grantee shall utilize the form entitled "Checklist for Nonstate Organizations Recipient/Subrecipient vs Vendor Determination" (form number DFS-A2-NS) that can be found under the "Links/Forms" section appearing at the following website: https:\\apps.fldfs.com\fsaa.

d. Proof of Transactions. In addition to documentation provided to support cost reimbursement as described herein, Department may periodically request additional proof of a transaction to evaluate the appropriateness of costs to the Agreement pursuant to State guidelines (including cost allocation guidelines) and federal, if applicable. Allowable costs and uniform administrative requirements for federal programs can be found under 2 CFR 200. The Department may also request a cost allocation plan in support of its multipliers (overhead, indirect, general administrative costs, and fringe benefits). The Grantee must provide the additional proof within thirty (30) days of such request.

e. No Commingling of Funds. The accounting systems for all Grantees must ensure that these funds are not commingled with funds from other agencies. Funds from each agency must be accounted for separately. Grantees are prohibited from commingling funds on either a program-by-program or a project-by-project basis. Funds specifically budgeted and/or received for one project may not be used to support another project. Where a Grantee's, or subrecipient's, accounting system cannot comply with this requirement, Grantee, or subrecipient, shall establish a system to provide adequate fund accountability for each project it has been awarded.
i. If Department finds that these funds have been commingled, Department shall have the right to demand a refund, either in whole or in part, of the funds provided to Grantee under this Agreement for non-compliance with the material terms of this Agreement. The Grantee, upon such written notification from Department shall refund, and shall forthwith pay to Department, the amount of money demanded by Department. Interest on any refund shall be calculated based on the prevailing rate used by the State Board of Administration. Interest shall be calculated from the date(s) the original payment(s) are received from Department by Grantee to the date repayment is made by Grantee to Department.
ii. In the event that the Grantee recovers costs, incurred under this Agreement and reimbursed by Department, from another source(s), Grantee shall reimburse Department for all recovered funds originally provided under this Agreement and interest shall be charged for those recovered costs as calculated on from the date(s) the payment(s) are recovered by Grantee to the date repayment is made to Department.
iii. Notwithstanding the requirements of this section, the above restrictions on commingling funds do not apply to agreements where payments are made purely on a cost reimbursement basis.

30. Conflict of Interest.

The Grantee covenants that it presently has no interest and shall not acquire any interest which would conflict in any manner or degree with the performance of services required.

31. Independent Contractor.

The Grantee is an independent contractor and is not an employee or agent of Department.

32. Subcontracting/Subawards.

a. Unless otherwise specified in the Special Terms and Conditions, all services contracted for are to be performed solely by Grantee.

b. The Department may, for cause, require the replacement of any Grantee employee, subcontractor/subrecipient, or agent. For cause, includes, but is not limited to, technical or training qualifications, quality of work, change in security status, or non-compliance with an applicable Department policy or other requirement.
c. The Department may, for cause, deny access to Department's secure information or any facility by any Grantee employee, subcontractor/subrecipient, or agent.
d. The Department's actions under paragraphs b. or c. shall not relieve Grantee of its obligation to perform all work in compliance with the Agreement. The Grantee shall be responsible for the payment of all monies due under any subcontract/subaward. The Department shall not be liable to any subcontractor/subrecipient for any expenses or liabilities incurred under any subcontract/subaward, and Grantee shall be solely liable to the subcontractor for all expenses and liabilities incurred under any subcontract/subaward.
e. The Department will not deny Grantee's employees, subcontractors/subrecipients, or agents access to meetings within the Department's facilities, unless the basis of Department's denial is safety or security considerations.
f. A list of minority-owned firms that could be offered subcontracting opportunities may be obtained by contacting the Office of Supplier Development at (850) 487-0915.
g. The Grantee shall not be liable for any excess costs for a failure to perform, if the failure to perform is caused by the default of a subcontractor/subrecipient at any tier, and if the cause of the default is completely beyond the control of both Grantee and the subcontractor(s)/subrecipient(s), and without the fault or negligence of either, unless the subcontracted/subawarded products or services were obtainable from other sources in sufficient time for Grantee to meet the required delivery schedule.

33. Guarantee of Parent Company.

If Grantee is a subsidiary of another corporation or other business entity, Grantee asserts that its parent company will guarantee all of the obligations of Grantee for purposes of fulfilling the obligations of Agreement. In the event Grantee is sold during the period the Agreement is in effect, Grantee agrees that it will be a requirement of sale that the new parent company guarantee all of the obligations of Grantee.

34. Survival.

The respective obligations of the parties, which by their nature would continue beyond the termination or expiration of this Agreement, including without limitation, the obligations regarding confidentiality, proprietary interests, and public records, shall survive termination, cancellation, or expiration of this Agreement.

35. Third Parties.

The Department shall not be deemed to assume any liability for the acts, failures to act or negligence of Grantee, its agents, servants, and employees, nor shall Grantee disclaim its own negligence to Department or any third party. This Agreement does not and is not intended to confer any rights or remedies upon any person other than the parties. If Department consents to a subcontract/subaward, Grantee will specifically disclose that this Agreement does not create any third-party rights. Further, no third parties shall rely upon any of the rights and obligations created under this Agreement.

36. Severability.

If a court of competent jurisdiction deems any term or condition herein void or unenforceable, the other provisions are severable to that void provision, and shall remain in full force and effect.

37. Grantee's Employees, Subcontractors/Subrecipients and Agents.

All Grantee employees, subcontractors/subrecipients, or agents performing work under the Agreement shall be properly trained technicians who meet or exceed any specified training qualifications. Upon request, Grantee shall furnish a copy of technical certification or other proof of qualification. All employees, subcontractors/subrecipients, or agents performing work under Agreement must comply with all security and administrative requirements of Department and shall comply with all controlling laws and regulations relevant to the services they are providing under the Agreement.

38. Assignment.

The Grantee shall not sell, assign, or transfer any of its rights, duties, or obligations under the Agreement, or under any purchase order issued pursuant to the Agreement, without the prior written consent of Department. In the event of any assignment, Grantee remains secondarily liable for performance of the Agreement, unless Department expressly waives such secondary liability. The Department may assign the Agreement with prior written notice to Grantee of its intent to do so.

39. Compensation Report.

If this Agreement is a sole-source, public-private agreement or if the Grantee, through this agreement with the State, annually receive 50% or more of their budget from the State or from a combination of State and Federal funds, the Grantee shall provide an annual report, including the most recent IRS Form 990, detailing the total compensation for

the entities' executive leadership teams. Total compensation shall include salary, bonuses, cashed-in leave, cash equivalents, severance pay, retirement benefits, deferred compensation, real-property gifts, and any other payout. The Grantee must also inform the Department of any changes in total executive compensation between the annual reports. All compensation reports must indicate what percent of compensation comes directly from the State or Federal allocations to the Grantee.

40. Disclosure of Gifts from Foreign Sources.

If the value of the grant under this Agreement is $100,000 or more, Grantee shall disclose to Department any current or prior interest of, any contract with, or any grant or gift received from a foreign country of concern, as defined in section 286.101, F.S., if such interest, contract, or grant or gift has a value of $50,000 or more and such interest existed at any time or such contract or grant or gift was received or in force at any time during the previous 5 years. Such disclosure shall include the name and mailing address of the disclosing entity, the amount of the contract or grant or gift or the value of the interest disclosed, the applicable foreign country of concern and, if applicable, the date of termination of the contract or interest, the date of receipt of the grant or gift, and the name of the agent or controlled entity that is the source or interest holder. If the disclosure requirement is applicable as described above, then within 1 year before applying for any grant, Grantee must also provide a copy of such disclosure to the Department of Financial Services.

41. Food Commodities.

To the extent authorized by federal law, the Department, its grantees, contractors and subcontractors/subrecipients shall give preference to food commodities grown or produced in this state when purchasing food commodities, including farm products as defined in section 823.14, F.S., of any class, variety, or use thereof in their natural state or as processed by a farm operation or processor for the purpose of marketing such product.

42. Anti-human Trafficking.

If the Grantee is a nongovernmental entity, the Grantee must provide the Department with an affidavit signed by an officer or a representative of the Grantee under penalty of perjury attesting that the Grantee does not use coercion for labor or services as defined in section 787.06, F.S.

43. Iron and Steel for Public Works Projects.

If this Agreement funds a “public works project” as defined in section 255.0993, F.S., or the purchase of materials to be used in a public works project, any iron or steel permanently incorporated in the Project must be “produced in the United States,” as defined in section 255.0993, F.S. This requirement does not apply if the Department determines that any of the following circumstances apply to the Project:

(1) iron or steel products produced in the United States are not produced in sufficient quantities, reasonably available, or of satisfactory quality;
(2) the use of iron or steel products produced in the United States will increase the total cost of the project by more than twenty percent (20%); or
(3) complying with this requirement is inconsistent with the public interest.

Further, this requirement does not prevent the Contractor’s minimal use of foreign steel and iron materials if:

(1) such materials are incidental or ancillary to the primary product and are not separately identified in the project specifications; and
(2) the “cost” of such materials, as defined in section 255.0993, F.S., does not exceed one-tenth of one percent (1%) of the total Project Cost under this Agreement or $2,500, whichever is greater.

Electrical components, equipment, systems, and appurtenances, including supports, covers, shielding, and other appurtenances related to an electrical system that are necessary for operation or concealment (excepting transmission and distribution poles) are not considered to be iron or steel products and are, therefore, exempt from the requirements of this paragraph.

This provision shall be applied in a manner consistent with and may not be construed to impair the state’s obligations under any international agreement.

44. Complete and Accurate information.

Grantee represents and warrants that all statements and information provided to DEP are current, complete, and accurate. This includes all statements and information in this Grant, as well as its Attachments and Exhibits.

45. Execution in Counterparts and Authority to Sign.

This Agreement, any amendments, and/or change orders related to the Agreement, may be executed in counterparts, each of which shall be an original and all of which shall constitute the same instrument. In accordance with the Electronic Signature Act of 1996, electronic signatures, including facsimile transmissions, may be used and shall have the same force and effect as a written signature. Each person signing this Agreement warrants that he or she is duly authorized to do so and to bind the respective party to the Agreement.

STATE OF FLORIDA
DEPARTMENT OF ENVIRONMENTAL PROTECTION
Special Terms and Conditions
AGREEMENT NO. 26SRP16

ATTACHMENT 2

These Special Terms and Conditions shall be read together with general terms outlined in the Standard Terms and Conditions, Attachment 1. Where in conflict, these more specific terms shall apply.

1. Scope of Work.
The Project funded under this Agreement is Tarpon Springs Wastewater Treatment Electrical Resiliency Project. The Project is defined in more detail in Attachment 3, Grant Work Plan.

2. Duration.
a. Reimbursement Period. The reimbursement period for this Agreement is the same as the term of the Agreement.
b. Extensions. There are extensions available for this Project.
c. Service Periods. Additional service periods may be added in accordance with 2.a above and are contingent upon proper and satisfactory technical and administrative performance by the Grantee and the availability of funding.

3. Payment Provisions.
a. Compensation. This is a cost reimbursement Agreement. The Grantee shall be compensated under this Agreement as described in Attachment 3.
b. Invoicing. Invoicing will occur as indicated in Attachment 3.
c. Advance Pay. Advance Pay is not authorized under this Agreement.

4. Cost Eligible for Reimbursement or Matching Requirements.
Reimbursement for costs or availability for costs to meet matching requirements shall be limited to the following budget categories, as defined in the Reference Guide for State Expenditures, as indicated:

Reimbursement	Match	Category
☐	☐	Salaries/Wages
		Overhead/Indirect/General and Administrative Costs:
☐	☐	a. Fringe Benefits, N/A.
☐	☐	b. Indirect Costs, N/A.
☒	☒	Contractual/Subaward (Subcontractors/Subrecipients)
☐	☐	Travel, in accordance with Section 112, F.S.
☐	☒	Equipment
☐	☐	Rental/Lease of Equipment
☐	☐	Miscellaneous/Other Expenses
☐	☐	Land Acquisition

5. Equipment Purchase.
The purchase of non-expendable personal property or equipment costing $5,000 or more purchased for purposes of this Agreement remains the property of the Grantee. Upon satisfactory completion of this Agreement, the Grantee may retain ownership or determine the disposition of the non-expendable personal property or equipment purchased under this Agreement. However, the Grantee is required to account for and report on all nonexpendable and/or non-consumable personal property or equipment purchased under this Agreement in accordance with the Grantee's financial reporting and inventory control requirements. Based on the report, the Grantee will submit Exhibit B, Property Reporting Form, along with the appropriate invoice(s) to the Department's Grant Manager with any applicable requests for reimbursement. The following terms shall apply:
a. The Grantee shall have use of the non-expendable personal property or equipment for the authorized purposes of the contractual arrangement as long as the required work is being performed.

b. The Grantee is responsible for the implementation of adequate maintenance procedures to keep the non-expendable personal property or equipment in good operating condition.
c. The Grantee is responsible for any loss, damage, or theft of, and any loss, damage or injury caused by the use of, non-expendable personal property or equipment purchased with state funds and held in Grantee's possession for use in a contractual arrangement with the Department.
d. The Grantee is responsible for keeping a current and accurate inventory of any nonexpendable and/or non-consumable personal property or equipment in accordance with its financial reporting and inventory control requirements. The Department may request an annual copy of these inventory records for the life of the Agreement.

6. Land Acquisition.
There will be no Land Acquisitions funded under this Agreement.

7. Match Requirements
The Agreement requires at least a 50% match on the part of the Grantee. Therefore, the Grantee is responsible for providing $2,207,000.00 through cash or third party in-kind towards the work funded under this Agreement.
The Grantee may claim allowable project expenditures made on July 1, 2021, or after for purposes of meeting its match requirement as identified above.
Each payment request submitted shall document all matching funds and/or match efforts (i.e., in-kind services) provided during the period covered by each request. The final payment will not be processed until the match requirement has been met.
If, upon completion of this Project, actual Project costs are less than the total estimated Project costs, and there are no pending payment requests, the Grantee's required match may be reduced proportionately, as long as at least a 50% match of the actual total cost of the Project is provided by the Grantee and the reduced amount satisfies statutory and program requirements.

8. Insurance Requirements
Required Coverage. At all times during the Agreement the Grantee, at its sole expense, shall maintain insurance coverage of such types and with such terms and limits described below. The limits of coverage under each policy maintained by the Grantee shall not be interpreted as limiting the Grantee's liability and obligations under the Agreement. All insurance policies shall be through insurers licensed and authorized to issue policies in Florida, or alternatively, Grantee may provide coverage through a self-insurance program established and operating under the laws of Florida. Additional insurance requirements for this Agreement may be required elsewhere in this Agreement, however the minimum insurance requirements applicable to this Agreement are:

a. Commercial General Liability Insurance.
The Grantee shall provide adequate commercial general liability insurance coverage and hold such liability insurance at all times during the Agreement. The Department, its employees, and officers shall be named as an additional insured on any general liability policies. The minimum limits shall be $250,000 for each occurrence and $500,000 policy aggregate.
b. Commercial Automobile Insurance.
If the Grantee's duties include the use of a commercial vehicle, the Grantee shall maintain automobile liability, bodily injury, and property damage coverage. Insuring clauses for both bodily injury and property damage shall provide coverage on an occurrence basis. The Department, its employees, and officers shall be named as an additional insured on any automobile insurance policy. The minimum limits shall be as follows:

$200,000/300,000	Automobile Liability for Company-Owned Vehicles, if applicable
$200,000/300,000	Hired and Non-owned Automobile Liability Coverage

c. Workers' Compensation and Employer's Liability Coverage.
The Grantee shall provide workers' compensation, in accordance with Chapter 440, F.S. and employer liability coverage with minimum limits of $100,000 per accident, $100,000 per person, and $500,000 policy aggregate. Such policies shall cover all employees engaged in any work under the Grant.
d. Other Insurance. None.

9. Quality Assurance Requirements.
There are no special Quality Assurance requirements under this Agreement.

10. Retainage.
Retainage is permitted under this Agreement. Retainage may be up to a maximum of 5% of the total amount of the Agreement.

11. Subcontracting/Subawards.
The Grantee may subcontract/subaward work under this Agreement without the prior written consent of the Department's Grant Manager except for certain fixed-price subcontracts/subawards pursuant to this Agreement, which require prior approval. The Grantee shall submit a copy of the executed subcontracts/subaward to the Department prior to submitting any invoices for subcontracted/subawarded work. Regardless of any subcontract/subaward, the Grantee is ultimately responsible for all work to be performed under this Agreement.

12. State-owned Land.
The work will not be performed on State-owned land.

13. Office of Policy and Budget Reporting.
There are no special Office of Policy and Budget reporting requirements for this Agreement.

14. Common Carrier.

a. Applicable to contracts with a common carrier – firm/person/corporation that as a regular business transports people or commodities from place to place. If applicable, Contractor must also fill out and return PUR 1808 before contract execution. If Contractor is a common carrier pursuant to section 908.111(1)(a), Florida Statutes, the Department will terminate this contract immediately if Contractor is found to be in violation of the law or the attestation in PUR 1808.

b. Applicable to solicitations for a common carrier – Before contract execution, the winning Contractor(s) must fill out and return PUR 1808, and attest that it is not willfully providing any service in furtherance of transporting a person into this state knowing that the person unlawfully present in the United States according to the terms of the federal Immigration and Nationality Act, 8 U.S.C. ss. 1101 et seq. The Department will terminate a contract immediately if Contractor is found to be in violation of the law or the attestation in PUR 1808.

15. Financial Assistance and Payment of Invoices to Rural Communities or Rural Areas of Opportunity
This agreement does not provide federal or state financial assistance to a county or municipality that is a rural community or rural area of opportunity as those terms are defined in s. 288.0656(2).

16. Additional Terms.
None.

STATE OF FLORIDA
DEPARTMENT OF ENVIRONMENTAL PROTECTION
GRANT WORK PLAN
AGREEMENT NO. 26SRP16

ATTACHMENT 3

PROJECT TITLE: City of Tarpon Springs Wastewater Treatment Electical Resiliency Project

PROJECT LOCATION: The Project is located in City of Tarpon Springs within Pinellas County, Florida.

PROJECT DESCRIPTION:
The City of Tarpon Springs (Grantee) will conduct the City of Tarpon Springs Wastewater Treatement Electrical Resiliency Project (Project) to include relocating electrical operations to an existing elevated building to accommodate installation of a new electrical Motor Control Center and Communication Network for the Advanced Wastewater Treatment Facility. A new and upsized emergency generator and electrical transformer will also be furnished and installed on newly constructed elevated platforms adjoining the electrical building. The square footage of this electrical building is approximately 520 square feet and the elevation will be greater than 2 feet above the 100 year flood elevation.

TASKS AND DELIVERABLES:

Task 1: Construction

Description: The Grantee will construct the City of Tarpon Springs Wastewater Treatement Electrical Resiliency Project in accordance with the construction contract documents. Project costs associated with the Construction task include work approved through construction bids and/or construction-phase engineering and monitoring services contracts. Eligible activities may include mobilization, demobilization, construction observation or inspection services, physical and environmental surveys, and mitigation projects. Construction shall be conducted in accordance with all local, state, and federal permits. Project Management activities may include field engineering services, site meetings with construction contractor(s) and design professionals, and overall project coordination and supervision.

Deliverables: The Grantee will provide the following:

- **1.1:** List of permit type, number, and issuing entity for all local, state, and federal permits required for the Project. This should include any permits listed in the original project application, permits required for construction,
- **1.2:** A copy of the final design;
- **1.3:** A Certificate of Completion signed by a Florida-registered Professional Engineer or authorized individual in responsible charge of project; and
- **1.4:** A copy of the record (as-built) drawings;
- **1.5:** Coordinate final site visit with Department and submit the Closeout Site Visit Form received from assigned Field Agent; and
- **1.6:** Project administration and management report(s) signed by a Florida-registered Professional Engineer or authorized individual in responsible charge of project. The report(s) must cover the performance period of the task and can be submitted no more frequently than quarterly during the performance period of the task. The report(s) must include:
    - A summary of project and site inspection(s);
    - Meeting minutes to all attended meetings; and
    - Field notes.

PERFORMANCE MEASURES: The Grantee will submit all deliverables for each task to ResilientFloridaGrants@FloridaDEP.gov on or before the Task Due Date listed in the Project Timeline. The Department's Grant Manager will review the deliverable(s) to verify that they meet the specifications in the Grant Work Plan and the task description, to include any work being performed by any subcontractor(s), and will provide written acceptance or non-acceptance of the deliverable(s) to the Grantee within thirty (30) calendar days. Deliverables that the Department determines are not acceptable must be corrected and resubmitted within thirty (30) calendar days prior to the Agreement's Date of Expiration, and in coordination with the Department's Grant Manager. Tasks may include multiple deliverables to be completed. The Department will accept partial and full deliverables. Incomplete deliverables will not be accepted. A "partial deliverable" is defined as a deliverable consisting of one (1) or more (but not all) subcomponents listed in the deliverable list for a single task, where such subcomponent(s) are delivered to the Department at one hundred percent (100%) completion. A "full deliverable" is defined as a deliverable comprising all subcomponents listed in the deliverable list for a single task, all delivered to the Department at one hundred percent (100%) completion. An "incomplete deliverable" is defined as a deliverable for which one hundred percent (100%) completion has not been achieved for any of the subcomponents listed in the deliverable list for a single task. A task is considered one hundred percent (100%) complete upon the Department's receipt and approval of all deliverable(s) listed within the task and the Department's approval provided by the Deliverable Acceptance Letter. All deliverables must be received by the Task Due Date and accepted by the Department on or before the Agreement's Date of Expiration, or the Consequences for Non-Performance set forth herein shall apply.

CONSEQUENCES FOR NON-PERFORMANCE: For each task deliverable not received and accepted by the Department at one hundred percent (100%) completion on or before the Agreement's Date of Expiration, the Department will reduce the relevant Task Funding Amount(s) paid to Grantee in proportion to the percentage of the deliverable(s) not fully completed. For each task deliverable not received by the Department by the specified Task Due Date listed in the Agreement's most recent Project Timeline, the Department will reduce the relevant Task Funding Amount(s) by 5% per calendar day, which will be imposed until the Department has received the task deliverable. The Consequence for Non-Performance will be applied to and included in the relevant task deliverable's payment request.

PAYMENT REQUEST SCHEDULE: Following the Grantee's full or partial completion of a task's deliverable(s) and acceptance by the Department's Grant Manager, the Grantee may submit a payment request for cost reimbursement using the Exhibit C, Payment Request Summary Form. All payment requests must be accompanied by the Deliverable Acceptance Letter; the Exhibit A, Progress Report Form, detailing all progress made in the invoice period; and supporting fiscal documentation including match, if applicable. If the payment request includes the Contractual Services budget category, the Exhibit H, Contractual Services Certification, and all supporting documentation required therein, must be submitted for each of the Grantee's contractors included in the payment request. Interim payments will not be accepted. Payment requests will not be accepted until all required Exhibit A, Progress Report Forms, have been submitted to the Department's Grant Manager for all reporting periods dating back to the Agreement Execution Date. For the reporting period beginning on the Agreement Begin Date and ending on the Agreement Execution Date, submittal of a single Exhibit A, Progress Report Form, covering only this reporting period will be acceptable. Upon the Department's receipt of the aforementioned documents and supporting fiscal documentation, the Department's Grant Manager will have ten (10) working days to review and approve or deny the payment request.

PROJECT TIMELINE AND BUDGET DETAIL: The tasks must be completed by, and all deliverables received by, the corresponding task due date listed in the table below and must be an allowable expenditure category pursuant to Attachment 2, Special Terms and Conditions. Cost-reimbursable grant funding must not exceed the budget amounts indicated below. Requests for any change(s) to the task due date(s) must be

submitted on or before the current task due date listed in the Project Timeline. Requests are to be sent via email to the Department's Grant Manager, with the details of the request and the reason for the request made clear.

Task No.	Task Title	DEP Amount	Match Amount	Total Amount	Task Start Date	Task Due Date
1	Construction	$2,207,000	$ 2,207,000	$4,414,000	7/1/2025	3/31/2028
	Total:	**$2,207,000**	**$2,207,000**	**$4,414,000**		

STATE OF FLORIDA
DEPARTMENT OF ENVIRONMENTAL PROTECTION
Public Records Requirements

Attachment 4

1. **Public Records.**

a. If the Agreement exceeds $35,000.00, and if Grantee is acting on behalf of Department in its performance of services under the Agreement, Grantee must allow public access to all documents, papers, letters, or other material, regardless of the physical form, characteristics, or means of transmission, made or received by Grantee in conjunction with the Agreement (Public Records), unless the Public Records are exempt from section 24(a) of Article I of the Florida Constitution and section 119.07(1), F.S.

b. The Department may unilaterally terminate the Agreement if Grantee refuses to allow public access to Public Records as required by law.

2. **Additional Public Records Duties of Section 119.0701, F.S., If Applicable.**
For the purposes of this paragraph, the term "contract" means the "Agreement." If Grantee is a "contractor" as defined in section 119.0701(1)(a), F.S., the following provisions apply and the contractor shall:

a. Keep and maintain Public Records required by Department to perform the service.

b. Upon request, provide Department with a copy of requested Public Records or allow the Public Records to be inspected or copied within a reasonable time at a cost that does not exceed the cost provided in Chapter 119, F.S., or as otherwise provided by law.

c. A contractor who fails to provide the Public Records to Department within a reasonable time may be subject to penalties under section 119.10, F.S.

d. Ensure that Public Records that are exempt or confidential and exempt from Public Records disclosure requirements are not disclosed except as authorized by law for the duration of the contract term and following completion of the contract if the contractor does not transfer the Public Records to Department.

e. Upon completion of the contract, transfer, at no cost, to Department all Public Records in possession of the contractor or keep and maintain Public Records required by Department to perform the service. If the contractor transfers all Public Records to Department upon completion of the contract, the contractor shall destroy any duplicate Public Records that are exempt or confidential and exempt from Public Records disclosure requirements. If the contractor keeps and maintains Public Records upon completion of the contract, the contractor shall meet all applicable requirements for retaining Public Records. All Public Records stored electronically must be provided to Department, upon request from Department's custodian of Public Records, in a format specified by Department as compatible with the information technology systems of Department. These formatting requirements are satisfied by using the data formats as authorized in the contract or Microsoft Word, Outlook, Adobe, or Excel, and any software formats the contractor is authorized to access.

f. **IF THE CONTRACTOR HAS QUESTIONS REGARDING THE APPLICATION OF CHAPTER 119, F.S., TO THE CONTRACTOR'S DUTY TO PROVIDE PUBLIC RECORDS RELATING TO THE CONTRACT, CONTACT THE DEPARTMENT'S CUSTODIAN OF PUBLIC RECORDS AT:**

Telephone: **(850) 245-2118**
Email: public.services@floridadep.gov
Mailing Address: **Department of Environmental Protection**
ATTN: Office of Ombudsman and Public Services
Public Records Request
3900 Commonwealth Boulevard, MS 49
Tallahassee, Florida 32399

STATE OF FLORIDA
DEPARTMENT OF ENVIRONMENTAL PROTECTION
Special Audit Requirements
(State and Federal Financial Assistance)

Attachment 5

The administration of resources awarded by the Department of Environmental Protection *(which may be referred to as the "Department", "DEP", "FDEP" or "Grantor", or other name in the agreement*) to the recipient *(which may be referred to as the "Recipient", "Grantee" or other name in the agreement)* may be subject to audits and/or monitoring by the Department of Environmental Protection, as described in this attachment.

MONITORING

In addition to reviews of audits conducted in accordance with 2 CFR Part 200, Subpart F-Audit Requirements, and Section 215.97, F.S., as revised (see "AUDITS" below), monitoring procedures may include, but not be limited to, on-site visits by DEP Department staff, limited scope audits as defined by 2 CFR 200.425, or other procedures. By entering into this Agreement, the recipient agrees to comply and cooperate with any monitoring procedures/processes deemed appropriate by the Department of Environmental Protection. In the event the Department of Environmental Protection determines that a limited scope audit of the recipient is appropriate, the recipient agrees to comply with any additional instructions provided by the Department to the recipient regarding such audit. The recipient further agrees to comply and cooperate with any inspections, reviews, investigations, or audits deemed necessary by the Chief Financial Officer (CFO) or Auditor General.

AUDITS

PART I: FEDERALLY FUNDED

This part is applicable if the recipient is a State or local government or a non-profit organization as defined in 2 CFR §200.330

1. A recipient that expends $1,000,000 or more in Federal awards in its fiscal year, must have a single or program-specific audit conducted in accordance with the provisions of 2 CFR Part 200, Subpart F. EXHIBIT 1 to this Attachment indicates Federal funds awarded through the Department of Environmental Protection by this Agreement. In determining the federal awards expended in its fiscal year, the recipient shall consider all sources of federal awards, including federal resources received from the Department of Environmental Protection. The determination of amounts of federal awards expended should be in accordance with the guidelines established in 2 CFR 200.502-503. An audit of the recipient conducted by the Auditor General in accordance with the provisions of 2 CFR Part 200.514 will meet the requirements of this part.

2. For the audit requirements addressed in Part I, paragraph 1, the recipient shall fulfill the requirements relative to auditee responsibilities as provided in 2 CFR 200.508-512.

3. A recipient that expends less than $1,000,000 in federal awards in its fiscal year is not required to have an audit conducted in accordance with the provisions of 2 CFR Part 200, Subpart F-Audit Requirements. If the recipient expends less than $1,000,000 in federal awards in its fiscal year and elects to have an audit conducted in accordance with the provisions of 2 CFR 200, Subpart F-Audit Requirements, the cost of the audit must be paid from non-federal resources (i.e., the cost of such an audit must be paid from recipient resources obtained from non-federal entities).

4. The recipient may access information regarding the Catalog of Federal Domestic Assistance (CFDA) via the internet at https://sam.gov/content/assistance-listings.

PART II: STATE FUNDED

This part is applicable if the recipient is a nonstate entity as defined by Section 215.97(1)(n), Florida Statutes.

1. In the event that the recipient expends a total amount of state financial assistance equal to or in excess of $750,000 in any fiscal year of such recipient (for fiscal years ending June 30, 2017, and thereafter), the recipient must have a State single or project-specific audit for such fiscal year in accordance with Section 215.97, F.S.; Rule Chapter 69I-5, F.A.C., State Financial Assistance; and the current Rules of the Auditor General. EXHIBIT 1 to this form lists the state financial assistance awarded through the Department of Environmental Protection by this agreement. In determining the state financial assistance expended in its fiscal year, the recipient shall consider all sources of state financial assistance, including state financial assistance received from the Department of Environmental Protection, other state agencies, and other nonstate entities. State financial assistance does not include federal direct or pass-through awards and resources received by a nonstate entity for Federal program matching requirements.

2. In connection with the audit requirements addressed in Part II, paragraph 1; the recipient shall ensure that the audit complies with the requirements of Section 215.97(8), Florida Statutes. This includes submission of a financial reporting package as defined by Section 215.97(2), Florida Statutes, and the current Rules of the Auditor General.

3. If the recipient expends less than $750,000 in state financial assistance in its fiscal year (for fiscal year ending June 30, 2017, and thereafter), an audit conducted in accordance with the provisions of Section 215.97, Florida Statutes, is not required. In the event that the recipient expends less than $750,000 in state financial assistance in its fiscal year, and elects to have an audit conducted in accordance with the provisions of Section 215.97, Florida Statutes, the cost of the audit must be paid from the non-state entity's resources (i.e., the cost of such an audit must be paid from the recipient's resources obtained from other than State entities).

4. For information regarding the Florida Catalog of State Financial Assistance (CSFA), a recipient should access the Florida Single Audit Act website located at https://apps.fldfs.com/fsaa for assistance. In addition to the above websites, the following websites may be accessed for information: Legislature's Website at http://www.leg.state.fl.us/Welcome/index.cfm, State of Florida's website at http://www.myflorida.com/, Department of Financial Services' Website at https://www.myfloridacfo.com/ and the Auditor General's Website at http://www.myflorida.com/audgen/.

PART III: OTHER AUDIT REQUIREMENTS

(NOTE: This part would be used to specify any additional audit requirements imposed by the State awarding entity that are solely a matter of that State awarding entity's policy (i.e., the audit is not required by Federal or State laws and is not in conflict with other Federal or State audit requirements). Pursuant to Section 215.97(8), Florida Statutes, State agencies may conduct or arrange for audits of State financial assistance that are in addition to audits conducted in accordance with Section 215.97, Florida Statutes. In such an event, the State awarding agency must arrange for funding the full cost of such additional audits.)

PART IV: REPORT SUBMISSION

1. Copies of reporting packages for audits conducted in accordance with 2 CFR Part 200, Subpart F-Audit Requirements, and required by PART I of this form shall be submitted, when required by 2 CFR 200.512, by or on behalf of the recipient directly to the Federal Audit Clearinghouse (FAC) as provided in 2 CFR 200.36 and 200.512

   A. The Federal Audit Clearinghouse designated in 2 CFR §200.501(a) (the number of copies required by 2 CFR §200.501(a) should be submitted to the Federal Audit Clearinghouse), at the following address:

By Mail:

Federal Audit Clearinghouse
Bureau of the Census
1201 East 10th Street
Jeffersonville, IN 47132

Submissions of the Single Audit reporting package for fiscal periods ending on or after January 1, 2008, must be submitted using the Federal Clearinghouse's Internet Data Entry System which can be found at http://harvester.census.gov/facweb/

2. Copies of financial reporting packages required by PART II of this Attachment shall be submitted by or on behalf of the recipient directly to each of the following:

A. The Department of Environmental Protection at one of the following addresses:

By Mail:
Audit Director
Florida Department of Environmental Protection
Office of Inspector General, MS 40
3900 Commonwealth Boulevard
Tallahassee, Florida 32399-3000

Electronically:
FDEPSingleAudit@dep.state.fl.us

B. The Auditor General's Office at the following address:

Auditor General
Local Government Audits/342
Claude Pepper Building, Room 401
111 West Madison Street
Tallahassee, Florida 32399-1450

The Auditor General's website (http://flauditor.gov/) provides instructions for filing an electronic copy of a financial reporting package.

3. Copies of reports or management letters required by PART III of this Attachment shall be submitted by or on behalf of the recipient directly to the Department of Environmental Protection at one of the following addresses:

By Mail:
Audit Director
Florida Department of Environmental Protection
Office of Inspector General, MS 40
3900 Commonwealth Boulevard
Tallahassee, Florida 32399-3000

Electronically:
FDEPSingleAudit@dep.state.fl.us

4. Any reports, management letters, or other information required to be submitted to the Department of Environmental Protection pursuant to this Agreement shall be submitted timely in accordance with 2 CFR 200.512, section 215.97, F.S., and the current Rules of the Auditor General, as applicable.

5. Recipients, when submitting financial reporting packages to the Department of Environmental Protection for audits done in accordance with 2 CFR 200, Subpart F-Audit Requirements, or the current Rules of the Auditor

General, should indicate the date and time the reporting package was delivered to the recipient and any correspondence accompanying the reporting package.

PART V: RECORD RETENTION

The recipient shall retain sufficient records demonstrating its compliance with the terms of the award and this Agreement for a period of **five (5)** years from the date the audit report is issued, and shall allow the Department of Environmental Protection, or its designee, Chief Financial Officer, or Auditor General access to such records upon request. The recipient shall ensure that audit working papers are made available to the Department of Environmental Protection, or its designee, Chief Financial Officer, or Auditor General upon request for a period of **three (3)** years from the date the audit report is issued, unless extended in writing by the Department of Environmental Protection.

EXHIBIT – 1

FUNDS AWARDED TO THE RECIPIENT PURSUANT TO THIS AGREEMENT CONSIST OF THE FOLLOWING:

Note: If the resources awarded to the recipient represent more than one federal program, provide the same information shown below for each federal program and show total federal resources awarded

Federal Resources Awarded to the Recipient Pursuant to this Agreement Consist of the Following:					
Federal Program A	Federal Agency	CFDA Number	CFDA Title	Funding Amount	State Appropriation Category
				$	
Federal Program B	Federal Agency	CFDA Number	CFDA Title	Funding Amount	State Appropriation Category
				$	

Note: Of the resources awarded to the recipient represent more than one federal program, list applicable compliance requirements for each federal program in the same manner as shown below:

Federal Program A	First Compliance requirement: i.e.: (what services of purposes resources must be used for)	
	Second Compliance requirement: i.e.:(eligibility requirement for recipients of the resources)	
	Etc.	
	Etc.	
Federal Program B	First Compliance requirement: i.e.: (what services of purposes resources must be used for)	
	Second Compliance requirement: i.e.: (eligibility requirement for recipients of the resources)	
	Etc.	
	Etc.	

Note: If the resources awarded to the recipient for matching represent more than one federal program, provide the same information shown below for each federal program and show total state resources awarded for matching.

State Resources Awarded to the Recipient Pursuant to this Agreement Consist of the Following Matching Resources for Federal Programs:					
Federal Program A	Federal Agency	CFDA	CFDA Title	Funding Amount	State Appropriation Category
Federal Program B	Federal Agency	CFDA	CFDA Title	Funding Amount	State Appropriation Category

Note: If the resources awarded to the recipient represent more than one state project, provide the same information shown below for each state project and show total state financial assistance awarded that is subject to section 215.97, F.S.

State Resources Awarded to the Recipient Pursuant to this Agreement Consist of the Following Resources Subject to Section 215.97, F.S.:						
State Program A	State Awarding Agency	State Fiscal Year[1]	CSFA Number	CSFA Title or Funding Source Description	Funding Amount	State Appropriation Category
Original Agreement	Florida Department of Environmental Protection	FY 25.26	37.098	Resilient Florida Programs	$2,207,000.00	140065
State Program B	State Awarding Agency	State Fiscal Year[2]	CSFA Number	CSFA Title or Funding Source Description	Funding Amount	State Appropriation Category

Total Award	$2,207,000.00	

Note: List applicable compliance requirement in the same manner as illustrated above for federal resources. For matching resources provided by the Department for DEP for federal programs, the requirements might be similar to the requirements for the applicable federal programs. Also, to the extent that different requirements pertain to different amount for the non-federal resources, there may be more than one grouping (i.e. 1, 2, 3, etc.) listed under this category.

For each program identified above, the recipient shall comply with the program requirements described in the Catalog of Federal Domestic Assistance (CFDA) [https://sam.gov/content/assistance-listings] and/or the Florida Catalog of State Financial Assistance (CSFA) [https://apps.fldfs.com/fsaa/searchCatalog.aspx], and State Projects Compliance Supplement (Part Four: State Projects Compliance Supplement [https://apps.fldfs.com/fsaa/compliance.aspx]. The services/purposes for which the funds are to be used are included in the Agreement's Grant Work Plan. Any match required by the Recipient is clearly indicated in the Agreement.

[1] Subject to change by Change Order.
[2] Subject to change by Change Order.

STATE OF FLORIDA
DEPARTMENT OF ENVIRONMENTAL PROTECTION
PROGRAM-SPECIFIC REQUIREMENTS
RESILIENT FLORIDA PROGRAM

ATTACHMENT 6

General

1. Deliverable and Payment Request Submissions. All grant deliverables and payment requests (Exhibit C) must be submitted to ResilientFloridaGrants@FloridaDEP.gov.

2. Progress Reports. The Exhibit A, Progress Report Form, must be submitted on a quarterly basis to ResilientFloridaGrants@FloridaDEP.gov starting in the quarter of the Agreement Execution Date through the quarter in which the final task deliverable is accepted and the Grantee is provided a Deliverable Acceptance Letter.

3. Contractual Services. For all grant agreements that include Contractual Services as a budget category, the Grantee must submit Exhibit H, Contractual Services Certification, and all supporting documentation required therein, for each of the Grantee's contractors prior to submitting a payment request for contractual services.

4. Grantee Match Form. If the grant agreement includes match requirements in Attachment 2, the Grantee must submit the Grantee Match Form upon execution of the grant agreement and at any time there are changes to the match funding amount and/or funding source throughout the grant agreement period.

5. Project Photos. The Grantee must submit Exhibit G, Photo Release Form, with the first submission of deliverables and reports (Exhibit A and F) that include photos.

6. DEP Logo and Funding Source Disclaimer. The final Vulnerability Assessment Report, Adaptation Plan report or document, and any permanent signage created for an implementation project included on the Statewide Flooding and Sea Level Rise Resilience Plan must include the Department's logo (which can be found on the Department's website at: https://floridadep.gov or by contacting the Grant Manager for a copy) as well as the following language:

   "This work was funded in part through a grant agreement from the Florida Department of Environmental Protection's Office of Resilience and Coastal Protection Resilient Florida Program. The views, statements, findings, conclusions, and recommendations expressed herein are those of the author(s) and do not necessarily reflect the views of the State of Florida or any of its subagencies."

7. Final Project Report. The Grantee must submit Exhibit F, Final Project Report Form, prior to requesting final payment. For grants funded with American Rescue Plan Act (ARPA) Funds that are not completed by the Agreement's Date of Expiration, Exhibit F must also be submitted to ResilientFloridaGrants@FloridaDEP.gov upon completion of the project, which may be after the Agreement's Date of Expiration.

8. Copyright, Patent and Trademark. The Department reserves a royalty-free, nonexclusive, and irrevocable license to reproduce, publish or otherwise use, and to authorize others to use, for state government purposes:
   a. The copyright in any work developed under this Agreement; and
   b. Any rights or copyright to which the Grantee or subcontractor purchases ownership with grant support.

9. Geographic Information System (GIS) files and associated metadata. All GIS files and associated metadata must adhere to the Resilient Florida Program's GIS Data Standards, found on the Resilient Florida Program website: https://floridadep.gov/rcp/resilient-florida-program/documents/resilient-florida-program-gis-data-standards, and raw data sources shall be defined within the associated metadata.

10. Program Deliverable Acceptance and Disclaimer. The Department's acceptance of any specific project's task deliverables required by that project's Resilient Florida Program grant agreement, does not guarantee the Department's acceptance of the same or similar task deliverables, as required by a different Resilient Florida Program grant agreement, notwithstanding the Grantee(s) and/or project(s) at issue being the same or similar. The Department will review and accept all deliverables individually, pursuant to the terms and conditions of each grant agreement for which they are submitted, including Attachment 3, Grant Work Plan. The Department's acceptance of a specific deliverable does not constitute the Department's confirmation that the conclusions or statements made within said deliverable are truthful or accurate, including, but not limited to, claims of scientific validity and the certification of engineering practices. If a dispute arises between the Department and Grantee regarding the veracity of a specific deliverable's content, the Department may request that the Grantee provide additional documentation (e.g., a certification statement signed and sealed by a licensed Professional Engineer), verifying that the conclusions or statements at issue are true and correct to the best of the Grantee's knowledge, prior to the Department's acceptance of said deliverable.

11. Sunshine Law Compliance. As per Paragraph 23 to Attachment 1, Standard Terms and Conditions, the Grantee is solely responsible for ensuring that its actions (and those of its agents) under the Agreement are made in compliance with Section 286.011, Florida Statutes—Florida's Government in the Sunshine Law—where applicable.

Implementation Grants

12. Sea Level Impact Projection Study Requirement. If a state-funded construction project is located within an area where a Sea Level Impact Protection (SLIP) study is required pursuant to Section 380.0937, Florida Statutes, the Grantee is responsible for conducting such a SLIP study and submitting the resulting report to the Department. The SLIP study report must be received by the Department, approved by the Department, and published on the Department's website for at least thirty (30) days before construction can commence. Upon submission to the Department, SLIP study reports must meet all relevant statutory requirements, as well as the standards and criteria indicated in Chapter 62S-7, Florida Administrative Code.

13. Permits. The Grantee acknowledges that receipt of this grant does not imply nor guarantee that a federal, state, or local permit will be issued for a particular activity. The Grantee agrees to ensure that all necessary permits are obtained prior to implementation of any grant-funded activity that may fall under applicable federal, state, or local laws. Further, the Grantee shall abide by all terms and conditions of each applicable permit for any grant-funded activity. Upon request, the Grantee must provide a copy of all required, acquired, and approved permits for the project.

14. Grant funds may not be used to support ongoing efforts to comply with certain legal requirements or actions that were unanticipated, non-existent, or unknown to the Department at the time of this Agreement's execution, including regulatory and permit compliance requirements, non-compliance and citation fees, fees resulting from unanticipated permit conditions, settlement agreements, and compliance with formal or informal enforcement actions to resolve violations of applicable rules and statutes (including consent orders, Closed Without Official Enforcement agreements, and similar enforcement actions). Grant funds may be utilized to support ongoing efforts to comply with permit-required conditions, as approved by the Resilient Florida Program (e.g., pre-, during-, and post-construction monitoring and mitigation efforts).

Grants Funded with American Rescue Plan Act (ARPA) Funds

15. Match Expenditure Monitoring. For any match-funded deliverable(s) identified in Attachment 3, Grant Work

Plan, not accepted by the Department by the Date of Expiration listed in Section 3 to the Standard Grant Agreement (as modified by any properly executed amendment(s), as applicable), the Grantee must submit Exhibit M, Match Expenditure Monitoring Form, to the Department prior to ARPA-funded grant closeout to identify all remaining deliverable(s) which are to be completed solely using Grantee match funding. Failure to submit Exhibit M and all remaining Project deliverables to the Department, as well as meet the Match Requirements identified in Section 7 to Attachment 2, may hinder the Grantee's chances of receiving future grant awards from the Resilient Florida Program.

STATE OF FLORIDA
DEPARTMENT OF ENVIRONMENTAL PROTECTION
RESILIENT FLORIDA GRANT PROGRAM
EXHIBIT A
PROGRESS REPORT FORM

The current **Exhibit A, Progress Report Form** for the Resilient Florida Program grant agreements can be found on the Department's website at the link below. Each progress report must be submitted on the current form. The Department will notify grantees of any substantial changes to Exhibit A that occur during the grant agreement period.

https://floridadep.gov/Resilient-Florida-Program/Grants

FLORIDA DEPARTMENT OF ENVIRONMENTAL PROTECTION

Exhibit B - Property Reporting Form

Agreement Number: 26SRP16

GRANTEE: In order to comply with applicable state and/or federal regulations, list non-expendable equipment/personal property costing $5,000 or more purchased directly or indirectly under the above Agreement. Complete: 1) a description of the property, 2) the serial number or other identification number, 3) the source, 4) who holds title/ownership, 5) purchase date, 6) cost, 7) DEP's percent share of that cost, 8) location/address of the property, 9) use and condition, 10) any ultimate disposition data, including date of disposal and sale price.

Description	Serial No./ ID No.	Source	Owner	Purchase Date	Cost	% Charged to DEP Grant	Location	Use and Condition	Disposition

Grantee: _____ **Date:** _____ **Grantee Grant Manager**: _____ **Date:** _____

BELOW IS FOR DEP USE ONLY

DEP GRANT MANAGER: Send invoices supporting the cost of the items to Finance and Accounting for the processing of the Grantee's invoice for payment. Maintain a copy of the invoices supporting the cost of each item identified above in your grant agreement file. Refer to Administrative Policy 320 for Property Guidelines.

DEP Grant Manager: _____ Date: _____

STATE OF FLORIDA
DEPARTMENT OF ENVIRONMENTAL PROTECTION
RESILIENT FLORIDA GRANT PROGRAM
EXHIBIT C
PAYMENT REQUEST SUMMARY FORM

The current **Exhibit C, Payment Request Summary Form** for the Resilient Florida Program grant agreements can be found on the Department's website at the link below. Each payment request must be submitted on the current form. The Department will notify grantees of any substantial changes to Exhibit C that occur during the grant agreement period.

https://floridadep.gov/Resilient-Florida-Program/Grants

EXHIBIT F

DEP AGREEMENT NO. 26SRP16

TARPON SPRINGS WASTEWATER TREATMENT ELECTRICAL RESILIENCY PROJECT

City of Tarpon Springs

Final Project Report

Insert Month & Year

This report is funded in part through a grant agreement from the Florida Department of Environmental Protection. The views, statements, findings, conclusions, and recommendations expressed herein are those of the author(s) and do not necessarily reflect the views of the State of Florida or any of its subagencies.

Part I. Executive Summary

Part II. Methodology

Part III. Outcome

Include the following: 1) evaluation of project's ability to meet goals and expected performance measures and provide explanation for why goals were not met, if applicable; 2) identify successful outcomes, areas for improvement, and quantifiable metrics (including the assigned metric in Exhibit A, if applicable) as a result of the project; and 3) final project photos, if an implementation construction project.

Part IV. Further Recommendations

Instructions for completing Exhibit F Final Project Report Form:

DEP AGREEMENT NO.: This is the number on your grant agreement.

GRANTEE NAME: Enter the name of the grantee's agency.

PROJECT TITLE: Enter the title shown on the first page of the grant agreement.

MONTH & YEAR: Enter month and year of publication

The final Project Report must contain the following sections: Executive Summary, Methodology, Outcome, and Further Recommendations. The Final Project Report must comply with the publication requirements in the grant agreement. Please limit the final project report to no more than five (5) pages. One electronic copy shall be submitted to the Department's Grant Manager for approval. Final payment will be held until receipt and approval of the Final Project Report.

Questions regarding completion of the Final Project Report should be directed to the Department's Grant Manager, identified in paragraph 18 of this agreement.

Florida Department of Environmental Protection

EXHIBIT G

PHOTOGRAPHER RELEASE FORM
FOR PHOTOGRAPHS, VIDEOS, AUDIO RECORDINGS AND ARTWORKS

DEP AGREEMENT NO: 26SRP16

RELEASE FORM FOR PHOTOGRAPHS, VIDEOS, AUDIO RECORDINGS AND ARTWORKS

Owner/Submitter's Name: _____

Address: _____

City: _____ **State:** _____ **Zip:** _____

Phone Number: (_____) _____ **Email:** _____

License and Indemnification

I certify that I am the owner of the photograph(s), video(s), audio recording(s) and/or artwork(s) being submitted and am eighteen (18) years of age or older.

I hereby grant to the Florida Department of Environmental Protection the royalty-free and non-exclusive right to distribute, publish and use the photograph(s), video(s), audio recording(s) and art work(s) submitted herewith (the "Work") to promote the Florida Department of Environmental Protection. Uses may include, but are not limited to:

1. Promotion of FDEP (including, but limited to publications, websites, social media venues, advertisements, etc.); and
2. Distribution to the media; and
3. Use in commercial products.

The Florida Department of Environmental Protection reserves the right to use/not use any Work as deemed appropriate by the Florida Department of Environmental Protection. No Work will be returned once submitted.

I hereby acknowledge that the Florida Department of Environmental Protection shall bear no responsibility whatsoever for protecting the Work against third-party infringement of my copyright interest or other intellectual property rights or other rights I may hold in such Work, and in no way shall be responsible for any losses I may suffer as a result of any such infringement; and I hereby represent and warrant that the Work does not infringe the rights of any other individual or entity.

I hereby unconditionally release, hold harmless and indemnify the Florida Department of Environmental Protection, its employees, volunteers, and representatives of and from all claims, liabilities and losses arising out of or in connection with the Florida Department of Environmental Protection's use of the Work. This release and indemnification shall be binding upon me, and my heirs, executors, administrators and assigns.

I have read and understand the terms of this release.

Owner signature: _____ **Date:** _____

Photo/video/audio/artwork/recording file name(s): _____

Location of photo/video/audio recording/artwork: _____

Name of person accepting Work submission _____

STATE OF FLORIDA
DEPARTMENT OF ENVIRONMENTAL PROTECTION
RESILIENT FLORIDA GRANT PROGRAM
CONTRACTUAL SERVICES CERTIFICATION

Exhibit H

Required for all grant agreements that include Contractual Services as an expenditure category.

DEP Agreement Number: 26SRP16

Project Title: Tarpon Springs Wastewater Treatment Electrical Resiliency Project

Grantee: City of Tarpon Springs

Subcontractor:

Note: A separate Exhibit H is required for each of the Grantee's contractor(s).

Prior to making a request for payment of contractual services, the Grantee must provide the following to the Department Grant Manager:

1. Documentation of the Grantee's procurement process, as consistent with Attachment 1, Paragraph 9(c) and Attachment 2, Paragraph 11;
2. For competitively procured fixed-price (vendor) subcontracts: A copy of the tabulation form (i.e., list of all quotes or bid amounts, as applicable) for the competitive procurement process (e.g., Invitation to Bid, Request for Proposals, or other similar competitive procurement documents), as required by Attachment 1, Paragraph 9(c)(i);
3. A copy of the Grantee's executed subcontract agreement, as required by Attachment 2, Paragraph 11. This submittal should include any relevant executed task/work/purchase order(s) and all subsequent amendments and/or change orders, as applicable, and as required for the work conducted under the above-mentioned DEP Agreement Number; and
4. This Exhibit H, signed and dated by the Grantee Grant Manager.

By signing below, I certify that, on behalf of the Grantee, I have provided all the information required by items 1. through 3. of this Exhibit, as stated above, to the Department Grant Manager. I also certify that the procurement process the Grantee utilized follows all of said Grantee's non-Departmental policies and procedures for subcontractors.

Grantee's Grant Manager Signature

Print Name

Date

COMMON CARRIER OR CONTRACTED CARRIER ATTESTATION FORM
(PUR 1808)

Exhibit J

This form must be completed by a Common Carrier or contracted carrier and submitted to the Governmental Entity with which a Contract being is executed, amended, or renewed. Capitalized terms used herein have the definitions ascribed in section 908.111, F.S.

City of Tarpon Springs is not willfully providing and will not willfully provide any service during the Contract term in furtherance of transporting a person into this state knowing that the person is an Unauthorized Alien, except to facilitate the detention, removal, or departure of the person from this state or the United States.

Under penalties of perjury, I declare that I have read the foregoing statement and that the facts stated in it are true.

Printed Name: John Koulianos

Title: Mayor

Signature:  Date: 9/9/25

Memorandum

Date: December 9, 2025
To: Mayor and Board of Commissioners
Through: Janina Lewis, Procurement Services Director
From: Janina Lewis, Procurement Services Director
Subject: Renew File No. 220001-Q-JL, Maintenance of Public Restrooms at the Sponge Exchange **(Janina Lewis Procurement Services Director)**

Recommendation

Renew File No. 220001-Q-JL, Maintenance of Public Restrooms at the Sponge Exchange, with N & Y Properties, LLC, for the period December 2, 2025, through December 1, 2026, in an annual not to exceed amount of $7,500.

Background

On December 1, 2021, the Board awarded the agreement with N & Y Properties, LLC. On January 10, 2023, the Board approved a conditional agreement through March 31, 2023. On March 14, 2023, the Board approved a conditional agreement through June 30, 2023. On June 13, 2023, the Board approved a conditional agreement. On July 11, 2023, the Board approved the final six months of the annual agreement. On November 11, 2023, the Board approved the final maintenance agreement period for FY24. On December 12 , 2024, the Board approved renewal no. 3 of the agreement period for FY25.
The purpose of this agreement is to provide for the upkeep, maintenance and other associated costs of the restrooms. The original award stipulated that any renewal or extension of the agreement for an additional twelve-month period must be approved by the Board of Commissioners. The restroom is stocked and kept clean by the current company. Attached is the current state of the restroom facilities located at the Sponge Exchange.

Funding

001-8802-519.4600 Non-Departmental General Fund

Strategic Plan Objective

N/A

City of Tarpon Springs

PUBLIC WORKS DEPARTMENT
325 EAST PINE STREET
POST OFFICE BOX 5004
TARPON SPRINGS, FLORIDA 34688-5004
(727) 938-3711

MEMORANDUM:

TO: Janina Lewis, Procurement Services Director

Through: Chris Cotta, Public Works Director Chris Cotta

From: Brandon Crum, Facilities Management Superintendent

Date: December 2, 2025

Subject: Maintenance Agreement Renewal for the Public Restrooms at the Sponge Exchange

Recommend:
Request the renewal of the maintenance agreement for the Public Restrooms at the Sponge Exchange with N&Y Properties, LLC, for the period December 2, 2025, through December 1, 2026, in an annual amount not to exceed the amount of $7,500.00.

Background:
The purpose of this agreement is to provide for the upkeep, maintenance and other associated costs of the restrooms.

Funding: 001-8802-519.4600 Non-Departmental General Fund

AGREEMENT BETWEEN THE CITY OF TARPON SPRINGS AND N & Y PROPERTIES, LLC REGARDING MAINTENANCE OF THE PUBLIC BATHROOMS AT THE SPONGE EXCHANGE

The **CITY OF TARPON SPRINGS**, a Florida municipal corporation, (hereinafter referred to as "City") and **N & Y PROPERTIES, LLC**, a Florida limited liability company (hereinafter referred to as "N & Y") agree as follows:

1. N & Y is the owner of the Sponge Exchange located at 735 Dodecanese Boulevard in the City of Tarpon Springs.
2. N & Y shall operate and maintain two (2) bathrooms – a men's room and a lady's room – for use by the public at the Sponge Exchange. N & Y agrees to keep and maintain the bathrooms in a clean and sanitary condition, in good working order and stocked with adequate bathroom supplies, including soap, paper towels, and toilet paper, at all times during the period of this agreement. Furthermore, N & Y shall keep the bathrooms open for use by the public at all times the Sponge Exchange businesses are open to the public and during the City's Night in the Island events.
3. The City shall contribute $7,500.00 per year to N & Y toward the upkeep, maintenance and other associated costs of the bathrooms beginning December 1, 2021. The City's contribution shall be paid in twelve (12) equal monthly installments of $625.00. Each installment shall be due on the last day of each month. The City's payments shall be contingent upon N & Y complying with its obligations set forth in paragraph 2 of this agreement.
4. N & Y shall assume all liability arising from the use, operation, or maintenance of the bathrooms and shall indemnify and hold the City harmless from any and all claims, demands or lawsuits for personal injury or property damage and all

damages, costs and attorney's fees incurred as a result of such claims arising from the use, operation or maintenance of the bathrooms.

5. This agreement supersedes and replaces all prior agreements concerning the bathrooms.
6. N & Y shall set up an account with the City to pay all water and sewer charges arising from the use and operation of the bathrooms and shall pay such charges as they become due. If this agreement is terminated by either party, the required deposit and other charges shall be paid to the account from the payment of the City.
7. This agreement shall be effective on December 1, 2021 and is for a period of twelve (12) months. Any renewal or extension of this agreement must be approved by the Board of Commissioners of the City of Tarpon Springs.
8. This agreement may be terminated by either party upon written notice to the other party thirty (30) days before the date of termination.

IN WITNESS WHEREOF, the parties hereto have executed this Agreement as of the last of the day and year written below.

ATTEST:

CITY OF TARPON SPRINGS

_____
Irene S. Jacobs, City Clerk

By:_____
Chris Alahouzos, Mayor

APPROVED AS TO FORM:

Dated:_____

_____
Thomas J. Trask, City Attorney

N & Y PROPERTIES, LLC

By: _____
Patty Kokkinos, Manager

Dated: Dec-2-2021

STATE OF FLORIDA
COUNTY OF PINELLAS

The foregoing instrument was acknowledged before me, by means of ☒ physical presence or ☐ online authorization, by Patty Kokkinos, Manager of N & Y PROPERTIES, LLC, who ☐ is personally known to me or ☐ has produced _____ as identification, this 2nd day of December, 2021.

_____
Notary Public, State of Florida

My Commission Expires: 04/01/2023

Notary Public State of Florida
Mary J Taylor
My Commission GG 318558
Expires 04/01/2023

CITY OF TARPON SPRINGS, FL

Procurement Services

324 East Pine Street
P.O. Box 5004
Tarpon Springs, Florida 34688-5004
(727) 942-5615
Fax (727) 937-1766

MEMORANDUM

TO: Honorable Mayor and Board of Commissioners

FROM: Janina Lewis, CPPO, NIGP-CPP, Procurement Services Director

DATE: 07/11/2023

SUBJECT: Update on File No. 220001-Q-JL, Maintenance of Public Restrooms at the Sponge Exchange

RECOMM

Update on File No. 220001-Q-JL, Maintenance of Public Restrooms at the Sponge Exchange, with N & Y Properties, LLC.

BACKGROUND:

On December 1, 2021, the Board awarded the agreement with N & Y Properties, LLC. On January 10, 2023, the Board agreed to renew the agreement period for 3 months, conditional on the upgrades/renovations of the restroom facility. On March 14, 2023, the Board approved a conditional agreement to fund the maintenance of the facility through June 1, 2023, at which time a request was made for the renovations to either be completed, or show some improvement to the facilities. On June 13, 2023, the update of renovations was brough to the Board with a notice from the contractor that the renovations would be completed by June 30, 2023. As of July 5, 2023, the project is complete and the restrooms are fully functional.The remainder amount of the contract for the period June 1, 2023, through December 1, 2023, is $4,375.00.

The purpose of this agreement is to provide for the upkeep, maintenance, and other associated costs of the restrooms. The original award stipulated that any renewal or extension of the agreement for an additional twelve-month period must be approved by the Board of Commissioners. The restroom is stocked and kept clean by the current company. Renovations have started. Attached is the current state of the restroom facilities located at the Sponge Exchange.

FUNDING: 001-8802-519.4600 Non-Departmental General Fund



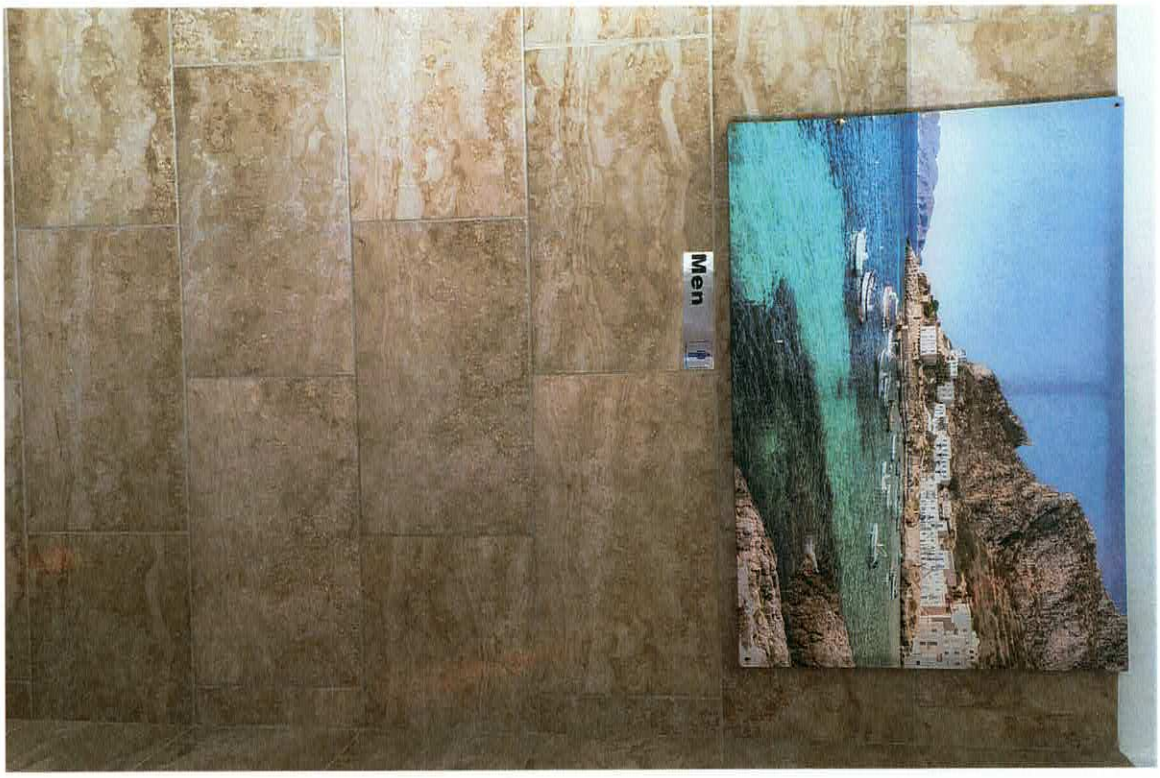
Men



Ladies



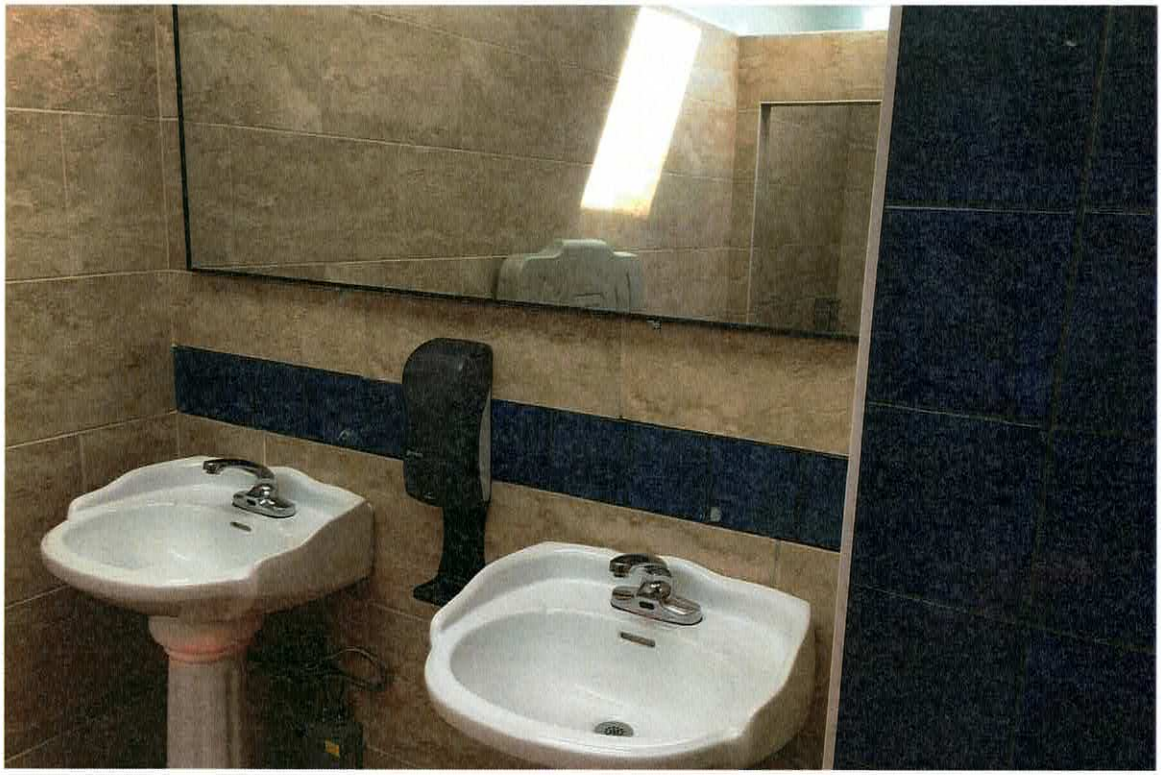

CITY OF TARPON SPRINGS, FL

Procurement Services

324 East Pine Street
P.O. Box 5004
Tarpon Springs, Florida 34688-5004
(727) 942-5615
Fax (727) 937-1766

MEMORANDUM

TO: Honorable Mayor and Board of Commissioners

FROM: Janina Lewis, CPPO, NIGP-CPP, Procurement Services Director

DATE: 06/13/2023

SUBJECT: Update on File No. 220001-Q-JL, Maintenance of Public Restrooms at the Sponge Exchange

RECOMM

Update on File No. 220001-Q-JL, Maintenance of Public Restrooms at the Sponge Exchange, with N & Y Properties, LLC.

BACKGROUND:

On December 1, 2021, the Board awarded the agreement with N & Y Properties, LLC. On January 10, 2023, the Board agreed to renew the agreement period for 3 months, conditional on the upgrades/renovations of the restroom facility. On March 14, 2023, the Board approved a conditional agreement to fund the maintenance of the facility through June 1, 2023, at which time a request was made for the renovations to either be completed, or show some improvement to the facilities. The remainder amount of the contract period for the period June 1, 2023, through December 1, 2023, is $4,375.00.

The purpose of this agreement is to provide for the upkeep, maintenance, and other associated costs of the restrooms. The original award stipulated that any renewal or extension of the agreement for an additional twelve-month period must be approved by the Board of Commissioners. The restroom is stocked and kept clean by the current company. Renovations have started. Attached is the current state of the restroom facilities located at the Sponge Exchange.

FUNDING: 001-8802-519.4600 Non-Departmental General Fund

CITY OF TARPON SPRINGS, FL

Procurement Services

324 East Pine Street
P.O. Box 5004
Tarpon Springs, Florida 34688-5004
(727) 942-5615
Fax (727) 937-1766

MEMORANDUM

TO: Honorable Mayor and Board of Commissioners

FROM: Janina Lewis, CPPO, NIGP-CPP, Procurement Services Director

DATE: 03/14/2023

SUBJECT: Update and Approve Renewal, File No. 220001-Q-JL, Maintenance of Public Restrooms at the Sponge Exchange

RECOMMENDATION:

Update and Approve Renewal File No. 220001-Q-JL, Maintenance of Public Restrooms at the Sponge Exchange, with N & Y Properties, LLC, for the period April 1, 2023, through December 1, 2023, in the remainder amount of the contract period not to exceed $5,625.00.

BACKGROUND:

On December 1, 2021, the Board awarded the agreement with N & Y Properties, LLC. On January 10, 2023, the Board agreed to renew the agreement period for 3 months, conditional on the upgrades/renovations of the restroom facility.

The purpose of this agreement is to provide for the upkeep, maintenance and other associated costs of the restrooms. The original award stipulated that any renewal or extension of the agreement for an additional twelve month period must be approved by the Board of Commissioners. The restroom is stocked and kept clean by the current company. Renovations have started. Attached is the current state of the restroom facilities located at the Sponge Exchange.

FUNDING: 001-8802-519.4600 Non-Departmental General Fund

CITY OF TARPON SPRINGS, FL

Procurement Services

324 East Pine Street
P.O. Box 5004
Tarpon Springs, Florida 34688-5004
(727) 942-5615
Fax (727) 937-1766

MEMORANDUM

TO: Honorable Mayor and Board of Commissioners

FROM: Janina Lewis, CPPO, NIGP-CPP, Procurement Services Director

DATE: 01/10/2023

SUBJECT: Recommend Review of Renewal, File No. 220001-Q-JL, Maintenance of Public Restrooms at the Sponge Exchange

RECOMMENDATION:

Recommend Review of Renewal File No. 220001-Q-JL, Maintenance of Public Restrooms at the Sponge Exchange, with N & Y Properties, LLC, for the period January 11, 2023, through January 10, 2024, in an annual not to exceed amount of $7,500.00.

BACKGROUND:

On December 1, 2021, the Board awarded the agreement with N & Y Properties, LLC.

The purpose of this agreement is to provide for the upkeep, maintenance and other associated costs of the restrooms. The original award stipulated that any renewal or extension of the agreement for an additional twelve month period must be approved by the Board of Commissioners. The restroom is stocked and kept clean by the current company. Attached is the current state of the restroom facilities located at the Sponge Exchange (see attached memo and photos).

Recommend the Board decide on whether or not to approve another year of maintenance fees, or condition the fees upon renovations of the restroom facilities.

FUNDING: 001-8802-519.4600 Non-Departmental General Fund

Memorandum

Date: December 9, 2025
To: Mayor and Board of Commissioners
Through: Janina Lewis, Procurement Services Director
From: Anela Saday, Senior Procurement Analyst
Subject: Award File No. 260065-C-AS, General Electrical Services **(Tom Kiger Public Services Director, Ray Page Utilities Superintendent, Bob Marcincuk Wastewater Division Manager, Darryl Vaci Water Division Manager, Rodney Doorlag Utilities Maintenance Supervisor, Janina Lewis Procurement Services Director)**

Recommendation

Award File No. 260065-C-AS, General Electrical Services, LLC, utilizing City of St. Petersburg Contract No. IFB-24-160 with LEW Electrical Services, effective from the date of award through July 23, 2027, in a total amount not to exceed $100,000, for the Public Services and Public Works Departments.

Background

The purpose of this contract is to provide as needed troubleshooting and electrical repair services performed by professional, licensed electricians for all water/wastewater utility and facilities maintenance needs. The City's Reverse Osmosis Water Treatment Facility and Advanced Wastewater Treatment Facility, along with numerous potable wells and sewage pump stations, require continuous electrical services to operate efficiently and maintain safe, reliable water and sewer services for customers and permit compliances. Public Works' divisions utilize electrical services for as needed repairs to sports field lighting and other miscellaneous repairs beyond the capability of the Facilities Maintenance Division (see attached memos).

Funding

Funding will be identified as repairs are needed.

Strategic Plan Objective

N/A

Public Services Department

Memorandum

Date: November 25, 2025

To: Janina Lewis, Procurement Services Director

Through: Thomas Kiger, Public Services Director TK

Raymond Page, Utilities Superintendent

From: Robert Marcincuk, Wastewater Division Manager
Darryl Vaci, Water Division Manager
Rodney Doorlag, Utilities Maintenance Supervisor

Subject: Authorize as-needed use of the City of St. Petersburg Contract No. IFB-24-160 with LEW Electrical Services for Electrical Services within Water/Sewer Utilities

Recommendation

Approve a contract utilizing the City of St. Petersburg contract No. IFB-24-160 with LEW Electrical Services for as needed electrical services within Water/Sewer Utilities, effective from the date of award through July 23, 2027. We are requesting a total amount not to exceed $50,000 for the Public Services Department.

Background

The City's Reverse Osmosis Water Treatment Facility (ROWTF) and Advanced Wastewater Treatment Facility (AWTF), along with numerous potable wells and sewage pump stations, continuously operate on electrical services. City staff has routinely operated, maintained and repaired municipal electrical service panels. This is a new contract for Public Services to provide the ability to supplement in-house staff with specialized electrical and instrumentation technicians in the event of complex electrical repairs. The purpose of this contract is to have as-needed troubleshooting and repair of electrical services available for all utility needs to maintain safe and reliable water/sewer utility services for our customers and permit compliances. Public Works has been utilizing this contract in the last year, and this represents an opportunity for improved redundancy and emergency response for maintaining critical electrical systems.

Funding

Funding accounts will be identified as repairs are needed.

Public Works Department
Office of the Director

To: Janina Lewis, Procurement Services Director

Through: Chris Cotta, Public Works Director Chris Cotta

From: Brandon Crum, Facility Management Superintendent

Date: November 24, 2025

Subject: Authorize as-needed use of the City of St. Petersburg Contract No. IFB-24-160 with LEW Electrical Services for sports field lighting.

Recommendation:

Approve utilizing the City of St. Petersburg contract No. IFB-24-160 with LEW Electrical Services for sports field lighting. We are requesting an annual amount not to exceed $50,000.

Background:

The City started using LEW Electrical Services in February of 2025 for sports field lighting repairs. Since that time, LEW has made several repairs for the City in a timely and efficient manner. The purpose of this contract is to provide electrical services on an as-needed basis for repairs to sports field lighting and other miscellaneous repairs beyond the capability of the Facilities Division. The contract is effective through July 23, 2027.

Funding:

Funding will be identified as repairs are needed as this is a citywide contract.

[LEW ELECTRICAL SERVICES] RESPONSE DOCUMENT REPORT

IFB No. IFB- 24 - 160

Electrical Services, Maintenance & Repair

RESPONSE DEADLINE: June 4, 2024 at 3:00 pm

Report Generated: Tuesday, December 10, 2024

LEW Electrical Services Response

CONTACT INFORMATION

Company:
LEW Electrical Services

Email:
sl@lew-fl.com

Contact:
Sean Leedy

Address:
4422 N 56th Street
Tampa, FL 33610

Phone:
N/A

Website:
N/A

Submission Date:
Jun 4, 2024 11:49 AM (Eastern Time)

ADDENDA CONFIRMATION

No addenda issued

QUESTIONNAIRE

1. General Information

IS THE VENDOR REGISTERED WITH THE FLORIDA DEPARTMENT OF STATE, DIVISION OF CORPORATIONS (SUNBIZ) IN ACCORDANCE WITH FLORIDA STATUTE §607.1501?*
Yes

IS THE VENDOR A CITY OF ST. PETERSBURG CERTIFIED SBE? *
No

IS THE VENDOR A CITY OF ST. PETERSBURG CERTIFIED MWBE? *
No

ADDRESS FOR HEADQUARTERS LOCATION.*
4422 N. 56th St Tampa FL 33610

ADDRESS OF OFFICE PROVIDING SERVICE, IF DIFFERENT THAN ABOVE.
No response submitted

CONTACT INFORMATION FOR CONTACT PERSON.*
This person must be capable of committing the company to an agreement with the City.

- Name

- Title
- Phone
- Email

Sean Leedy

CEO/Owner

813.630.2698

sl@lew-fl.com

DESCRIPTION OF NATURE OF COMPANY'S BUSINESS.*
Electrical Contractor.

Generator Department

Electrical Service and construction for commercial and industrial

YEAR THE COMPANY WAS FOUNDED.*
1975

NUMBER OF YEARS COMPANY HAS OPERATED UNDER THE CURRENT NAME.*
8

NUMBER OF YEARS COMPANY HAS BEEN IN THE PRESENT BUSINESS.*
49

COMPANY'S BANK OF RECORD.*
South State

DESCRIBE ANY LITIGATION THAT THE VENDOR HAS BEEN A PARTY TO IN THE LAST FIVE YEARS WHERE IT WAS ALLEGED THAT THE OFFEROR BREACHED A CONTRACT FOR SIMILAR SERVICES WITH A CLIENT/CUSTOMER AND DESCRIBE ANY CONTRACTS FOR SIMILAR SERVICES THAT THE VENDOR FAILED TO COMPLETE FOR SIMILAR SERVICES. DESCRIBE THE FACTS AND STATUS OF ANY SUCH LITIGATION OR CONTRACT. *
Type N/A if not applicable.

N/A

IDENTIFY ANY GOVERNMENT ENTITY THAT HAS DEBARRED OR OTHERWISE PROHIBITED THE VENDOR FROM RESPONDING TO ITS COMPETITIVE SOLICITATIONS WITHIN THE LAST FIVE YEARS. DESCRIBE THE CIRCUMSTANCES SURROUNDING SUCH DEBARMENT OR OTHER PROHIBITION. *
Type N/A if not applicable.

N/A

THE VENDOR ACKNOWLEDGES THAT IT HAS READ, UNDERSTANDS AND WILL COMPLY WITH FLORIDA STATUTE §448.095 PERTAINING TO REQUIRED USE OF THE U.S. DEPARTMENT OF HOMELAND SECURITY E-VERIFY SYSTEM. SHOULD THE CITY TERMINATE THE CONTRACT WITH THE VENDOR FOR VIOLATION OF §448.095, VENDOR MAY NOT BE AWARDED A CONTRACT WITH THE CITY FOR AT LEAST ONE YEAR.*
Confirmed

THE VENDOR ACKNOWLEDGES THAT ITS SOLICITATION RESPONSE IS SUBJECT TO PUBLIC RECORDS LAWS (CHAPTER 119, FLORIDA STATUTES).*
Confirmed

WILL VENDOR ALLOW OTHER AGENCIES TO PIGGYBACK THE CONTRACT IF AWARDED?*
Yes

THE VENDOR HEREBY MAKES ALL CERTIFICATIONS REQUIRED BY FLORIDA STATUTE §287.135 RELATED TO SCRUTINIZED COMPANIES.*

Yes

IS VENDOR REQUIRED TO PROVIDE ANY DISCLOSURES TO THE CITY REGARDING A FOREIGN COUNTRY OF CONCERN PURSUANT TO FLORIDA STATUTES §286.101 (3)(A)? *
No

IF YES, PLEASE PROVIDE THE DISCLOSURE(S) IN ACCORDANCE WITH THE REQUIREMENTS OF FLORIDA STATUTE §286.101 (3)(A).
No response submitted

THE VENDOR CERTIFIES THAT IT TAKES NO EXCEPTIONS TO THE TERMS AND CONDITIONS OF THE SOLICITATION.*
Yes

IF EXCEPTIONS ARE TAKEN, SPECIFY IN SPACE BELOW.
No response submitted

HAS THE VENDOR IDENTIFIED ANY TRADE SECRETS OR CONFIDENTIAL INFORMATION IN ITS SOLICITATION RESPONSE?*
No

IF YES TO THE ABOVE QUESTION, PLEASE UPLOAD YOUR REDACTED PROPOSAL HERE.
No response submitted

2. Service Contracts Over $200,000

DOES VENDOR EMPLOY MORE THAN 50 FULL TIME EMPLOYEES?*
No

IF YES, DOES THE VENDOR AGREE TO COMPLY WITH THE LIVING WAGE REQUIREMENTS SET FORTH IN THE ST. PETERSBURG CITY CODE? *

Yes

IS VENDOR REQUIRED TO PROVIDE ANY DISCLOSURES TO THE CITY REGARDING A FOREIGN COUNTRY OF CONCERN PURSUANT TO FLORIDA STATUTES SECTION 286.101 (3) (A)? *
No

PLEASE ATTACH YOUR COST PROPOSAL
No response submitted

PRICE TABLES

CITY FACILITIES

All Labor Rates shall include labor, tools, equipment, travel to and from the job site and overhead. Overhead rates include administrative costs, inventory, handling and material purchases.

Line Item	Description	Quantity	Unit of Measure	Unit Cost	Total
1	Licensed Journeyman Electrician MONDAY - FRIDAY 8 AM - 5 PM	1	HR	$80.00	$80.00
2	Licensed Journeyman Electrician MONDAY - FRIDAY 5:01 PM - 7.59 AM	1	HR	$120.00	$120.00
3	Licensed Journeyman Electrician WEEKENDS & HOLIDAYS 8 AM- 5 PM	1	HR	$120.00	$120.00
4	Licensed Journeyman Electrician WEEKENDS & HOLIDAYS 5:01 PM - 7:59 AM	1	HR	$120.00	$120.00
5	Electrician's Helper/Apprentice MONDAY - FRIDAY 8 AM - 5P M	1	HR	$65.00	$65.00
6	Electrician's Helper/Apprentice MONDAY - FRIDAY 5:01 PM - 7.59 AM	1	HR	$97.50	$97.50

Line Item	Description	Quantity	Unit of Measure	Unit Cost	Total
7	Electrician's Helper/Apprentice WEEKENDS & HOLIDAYS 8 AM- 5 PM	1	HR	$97.50	$97.50
8	Electrician's Helper/Apprentice WEEKENDS & HOLIDAYS 5:01 PM - 7:59 AM	1	HR	$97.50	$97.50
TOTAL					**$797.50**

AIRFIELD AND PORT LIGHTING FOR THE ALBERT WHITTED AIRPORT AND CRUISE PORT

Labor Rates below are for Airfield and Port Lighting for the Albert Whitted Airport and Cruise Port (Includes labor, tools, equipment, travel to and from job site and overhead. Overhead includes direct administrative costs, inventory, handling and material purchases).

Line Item	Description	Quantity	Unit of Measure	Unit Cost	Total
1	Licensed Journeyman Electrician MONDAY - FRIDAY 8 AM - 5 PM	1	HR	$80.00	$80.00
2	Licensed Journeyman Electrician MONDAY - FRIDAY 5:01 PM - 7.59 AM	1	HR	$120.00	$120.00
3	Licensed Journeyman Electrician WEEKENDS & HOLIDAYS 8 AM- 5 PM	1	HR	$120.00	$120.00
4	Licensed Journeyman Electrician WEEKENDS & HOLIDAYS 5:01 PM - 7:59 AM	1	HR	$120.00	$120.00
5	Electrician's Helper/Apprentice MONDAY - FRIDAY 8 AM - 5P M	1	HR	$70.00	$70.00
6	Electrician's Helper/Apprentice MONDAY - FRIDAY 5:01 PM - 7.59 AM	1	HR	$110.00	$110.00
7	Electrician's Helper/Apprentice WEEKENDS & HOLIDAYS 8 AM- 5 PM	1	HR	$110.00	$110.00
8	Electrician's Helper/Apprentice WEEKENDS & HOLIDAYS 5:01 PM - 7:59 AM	1	HR	$110.00	$110.00
TOTAL					**$840.00**

ELECTRICAL MAINTENANCE AND REPAIR SERVICES PERFORMED AT COSME WATER TREATMENT PLANT

Labor Rates below are for work at the Cosme Water Treatment Plant (Includes labor, tools, equipment, travel to and from job site and overhead. Overhead includes direct administrative costs, inventory, handling and material purchases.)

Line Item	Description	Quantity	Unit of Measure	Unit Cost	Total
1	Licensed Journeyman Electrician MONDAY - FRIDAY 8 AM - 5 PM	1	HR	$80.00	$80.00
2	Licensed Journeyman Electrician MONDAY - FRIDAY 5:01 PM - 7.59 AM	1	HR	$120.00	$120.00
3	Licensed Journeyman Electrician WEEKENDS & HOLIDAYS 8 AM- 5 PM	1	HR	$120.00	$120.00
4	Licensed Journeyman Electrician WEEKENDS & HOLIDAYS 5:01 PM - 7:59 AM	1	HR	$120.00	$120.00
5	Electrician's Helper/Apprentice MONDAY - FRIDAY 8 AM - 5P M	1	HR	$65.00	$65.00
6	Electrician's Helper/Apprentice MONDAY - FRIDAY 5:01 PM - 7.59 AM	1	HR	$97.50	$97.50
7	Electrician's Helper/Apprentice WEEKENDS & HOLIDAYS 8 AM- 5 PM	1	HR	$97.50	$97.50
8	Electrician's Helper/Apprentice WEEKENDS & HOLIDAYS 5:01 PM - 7:59 AM	1	HR	$97.50	$97.50
TOTAL					$797.50

EQUIPMENT RATE SCHEDULE

Line Item	Description	Quantity	Unit of Measure	Unit Cost	Total
1	Aerial (Bucket) Truck, 50' with Operator MONDAY - FRIDAY 8 AM - 5 PM	1	HR	$135.00	$135.00

Line Item	Description	Quantity	Unit of Measure	Unit Cost	Total
2	Aerial (Bucket) Truck, 50' with Operator MONDAY - FRIDAY 5:01 PM - 7.59 AM	1	HR	$202.50	$202.50
3	Aerial (Bucket) Truck, 50' with Operator WEEKENDS & HOLIDAYS 8 AM- 5 PM	1	HR	$202.50	$202.50
4	Aerial (Bucket) Truck, 50' with Operator WEEKENDS & HOLIDAYS 5:01 PM - 7:59 AM	1	HR	$202.50	$202.50
5	Line (Pole-Setting) Boom Truck with Operator MONDAY - FRIDAY 8 AM - 5P M	1	HR	$135.00	$135.00
6	Line (Pole-Setting) Boom Truck with Operator MONDAY - FRIDAY 5:01 PM - 7.59 AM	1	HR	$202.50	$202.50
7	Line (Pole-Setting) Boom Truck with Operator WEEKENDS & HOLIDAYS 8 AM- 5 PM	1	HR	$202.50	$202.50
8	Line (Pole-Setting) Boom Truck with Operator WEEKENDS & HOLIDAYS 5:01 PM - 7:59 AM	1	HR	$202.50	$202.50
TOTAL					**$1,485.00**

Docusign Envelope ID: 645E9FBE-B583-4B09-AF6A-BB372FD5C5DD

AGREEMENT

THIS AGREEMENT, ("Agreement") is made and entered into on the 24 day of July, 2024 ("Effective Date"), by and between LEW Electrical Services ("Contractor") and the City of St. Petersburg, Florida, ("City") (collectively, "Parties").

WITNESSETH:

NOW, THEREFORE, in consideration of the promises and covenants contained herein, and other good and valuable consideration, the receipt and adequacy of which are hereby acknowledged, the Parties agree as follows:

1. **Contractor Duties**. Contractor shall perform the scope of services set forth in Appendix A of this Agreement ("Scope of Services") for the City in full and complete accordance with this Agreement. Upon receipt of a purchase order issued by the City to Contractor in accordance with this Agreement (individually, "Purchase Order" and collectively, "Purchase Orders"), Contractor shall furnish the City with the services ordered, to the extent such services are set forth in this Agreement.

2. **Agreement Components**.

   A. The agreement components are this Agreement, the appendices to this Agreement, the attached CSP BPA FORM or CSP CPA FORM, as applicable ("BPA/CPA Form"), Purchase Orders, if any, and the following documents, which are made a part hereof by reference ("Other Documents"):

      (i) IFB-24-160 May 21, 2024 ("Document 1")
      (ii) LEW Electrical Services Response June 4, 2024 ("Document 2")

   B. In the event of an inconsistency or conflict between or among the documents referenced in this Agreement, the following order of precedence governs: (i) this Agreement, exclusive of its appendices, (ii) the appendices to this Agreement, (iii) the BPA/CPA Form, (iv) Purchase Orders, if any, and (v) the Other Documents. In the event of an inconsistency or conflict between or among the Other Documents, the order of precedence is the order the documents are listed above (e.g. Document 1 governs over Document 2, Document 2 governs over Document 3, etc.).

3. **Term**. The initial Term of this Agreement commences on the Effective Date and terminates on July 23, 2027, unless this Agreement is earlier terminated as provided for herein. The City reserves the right to extend this Agreement under the same terms and conditions for one (1) two (2)-year period(s) at the end of the initial Term, provided such extension is mutually agreed upon by both Parties in writing. References in this Agreement to "Term" includes the initial Term and all renewal Terms.

Docusign Envelope ID: 645E9FBE-B583-4B09-AF6A-BB372FD5C5DD

4. **Payment**.

A. Provided Contractor faithfully performs its obligations contained in this Agreement, the City shall pay Contractor for the services rendered in accordance with the prices for such services set forth in Appendix B of this Agreement ("Services Pricing"); provided, however, that the City is not required to pay Contractor for services unless they conform to the requirements of this Agreement, and further provided that the total amount paid to Contractor pursuant to this Agreement, which is inclusive of any out-of-pocket expenses (including but not limited to transportation, mileage, lodging, and meals) must not exceed one hundred sixty-six thousand, six hundred sixty-six dollars ($166,666) annually ("Maximum Annual Price"). Contractor shall invoice the City for services in accordance with procedures established by the City, and the City shall pay each invoice in accordance with the Local Government Prompt Payment Act. The Services Pricing and Maximum Annual Price may be increased only in strict accordance with this Agreement.

B. The Services Pricing may be adjusted as follows:

(i) Adjustments to the Services Pricing based on changes to labor costs may be requested by Contractor or the City after the initial twelve (12) months of the Term and then no more than once every six (6) months thereafter. Such increases or decreases in prices, if approved by the party to whom the request is made, will be calculated based on the percentage of the applicable Services Pricing that accounts for labor costs. Such increases or decreases in prices may not exceed the U.S. Bureau of Labor Statistics Consumer Price Index for All Urban Consumers ("CPI-U") percent change for the most recent twelve-month period (see http://www.bls.gov/, Consumer Price Index for All Urban Consumers, CPI-U Multi-Screen Data Search, Not Seasonally Adjusted, Tampa-St. Petersburg-Clearwater, FL, Services, Series ID CUURS35DSAS).

(ii) Approval of a price adjustment will establish a new base price from which subsequent adjustments will be calculated.

(iii) Contractor's requests for adjustments must be submitted in writing to the City's Procurement and Supply Management Department and must include a justification for the requested adjustment.

(iv) Any adjustment to the Services Pricing must be agreed upon by both Parties in a writing that will be attached to this Agreement, and Appendix B of this Agreement will be deemed amended accordingly.

(v) Any price adjustments that result in an increase to the Maximum Annual Price must be effectuated through amendments to this Agreement made in accordance with paragraph **Error! Reference source not found.** of this

Docusign Envelope ID: 645E9FBE-B583-4B09-AF6A-BB372FD5C5DD

Agreement.

5. **Ordering**. The City will issue Purchase Orders on an as-needed basis. Nothing contained herein may be construed to obligate the City to issue any Purchase Orders under this Agreement. When ordering, the City will furnish Contractor with a Purchase Order number; name of department; name of person placing the order, date of order; description of services ordered; and any required schedule.

6. **Indemnification.**

A. Contractor shall defend at its expense, pay on behalf of, hold harmless and indemnify the City, its officers, employees, agents, elected and appointed officials and volunteers (collectively, "Indemnified Parties") from and against any and all claims, demands, liens, liabilities, penalties, fines, fees, judgments, losses and damages (collectively, "Claims"), whether or not a lawsuit is filed, including, but not limited to Claims for damage to property or bodily or personal injuries, including death at any time resulting therefrom, sustained by any persons or entities; and costs, expenses and attorneys' and experts' fees at trial and on appeal, which Claims are alleged or claimed to have arisen out of or in connection with, in whole or in part, directly or indirectly:

(i) The performance of this Agreement (including any amendments thereto) by Contractor, its employees, agents, representatives or subcontractors; or

(ii) The failure of Contractor, its employees, agents, representatives or subcontractors to comply and conform with applicable Laws (as defined herein); or

(iii) Any negligent act or omission of Contractor, its employees, agents, representatives, or subcontractors, whether or not such negligence is claimed to be either solely that of Contractor, its employees, agents, representatives or subcontractors, or to be in conjunction with the claimed negligence of others, including that of any of the Indemnified Parties; or

(iv) Any reckless or intentional wrongful act or omission of Contractor, its employees, agents, representatives, or subcontractors; or

(v) Contractor's failure to maintain, preserve, retain, produce, or protect records in accordance with this Agreement and applicable Laws (including but not limited to Florida laws regarding public records).

B. The provisions of this paragraph are independent of, and will not be limited by, any insurance required to be obtained by Contractor pursuant to this Agreement or otherwise obtained by Contractor, and the provisions of this paragraph survive the

Docusign Envelope ID: 645E9FBE-B583-4B09-AF6A-BB372FD5C5DD

expiration or earlier termination of this Agreement with respect to any claims or liability arising in connection with any event occurring prior to such expiration or termination.

7. **Insurance.**

A. Contractor shall maintain the following minimum types and amounts of insurance throughout the Term at its own expense:

(i) Commercial general liability insurance in an amount of at least One Million Dollars ($1,000,000) per occurrence, Two Million Dollars ($2,000,000) aggregate in occurrences form. This policy must include coverage for bodily injury, property damage, personal and advertising injury, products and completed operations, and contractual liability under this Agreement.

(ii) Commercial automobile liability insurance of $1,000,000 combined single limit covering all owned, hired and non-owned vehicles.

(iii) Workers' Compensation insurance as required by Florida law and Employers' Liability Insurance in an amount of at least $100,000 each accident, $100,000 per employee, and $500,000 for all diseases.

B. All of Contractor's insurance policies, except Workers' Compensation, must name the Indemnified Parties as additional insureds.

C. All policies must provide that the City will be provided notice at least thirty (30) days prior to any cancellation, reduction or material change in coverage.

D. Contractor shall provide the City with Certificates of Insurance on a standard ACORD form, or similar form acceptable to the City, reflecting all required coverage. At the City's request, Contractor shall provide copies of current policies with all applicable endorsements.

E. All insurance required must be on a primary and noncontributory basis and must be provided by responsible insurers licensed in the State of Florida and rated at least A- in the then-current edition of AM Best's Rating Services, or similar rating agency acceptable to the City.

F. If the insurance carried by Contractor has broader coverage than required in this Agreement, then that broader coverage, including but not limited to additional insured requirements, is deemed to be the requirement in this Agreement. If Contractor's insurance limits are greater than the minimum limits set forth herein, then Contractor's insurance limits are deemed to be the required limits in this Agreement.

G. Contractor hereby waives all subrogation rights of its insurance carriers in favor of the Indemnified Parties. This provision is intended to waive fully, and for the

Docusign Envelope ID: 645E9FBE-B583-4B09-AF6A-BB372FD5C5DD

benefit of the Indemnified Parties, any rights or claims which might give rise to a right of subrogation in favor of any insurance carrier.

H. The City reserves the right to change or alter the above insurance requirements as it deems necessary.

8. **Notices.** Unless and to the extent otherwise provided in this Agreement, all notices, demands, requests for approvals and other communications which are required to be given by either party to the other must be in writing and will be deemed given and delivered on the date delivered in person, upon the expiration of five (5) days following the date mailed by registered or certified mail, postage prepaid, return receipt requested to the address provided below, or upon the date delivered by overnight courier (signature required) to the address provided below.

CITY:

City of St. Petersburg
Procurement and Supply Management Department
P. O. Box 2842
St. Petersburg, FL 33731
Phone: 727-893-7220
Attention: Stephanie N. Swinson

CONTRACTOR:

LEW Electrical Services
4422 North 56th St
Tampa, FL 33610
Attn: Sean Leedy

9. **Severability.** Should any paragraph or portion of any paragraph of this Agreement be rendered void, invalid or unenforceable by any court of law for any reason, such determination will not render void, invalid or unenforceable any other paragraph or portion of this Agreement.

10. **Due Authority.** Each party to this Agreement that is not an individual represents and warrants to the other party that (i) it is a duly organized, qualified and existing entity authorized to do business under the laws of the State of Florida, and (ii) all appropriate authority exists so as to duly authorize the person executing this Agreement to so execute the same and fully bind the party on whose behalf he or she is executing.

11. **Assignment.** Contractor shall make no assignment of this Agreement without the prior written consent of the City. Any assignment of this Agreement contrary to this paragraph is void and confers no rights upon the assignee.

Docusign Envelope ID: 645E9FBE-B583-4B09-AF6A-BB372FD5C5DD

12. **Termination.**

A. This Agreement may be terminated at any time by the City for convenience upon thirty (30) days written notice to Contractor.

B. The City may terminate this Agreement upon written notice to Contractor in the event Contractor defaults on any of the terms and conditions of this Agreement and such failure continues for a period of thirty (30) days following notice from the City specifying the default; provided, however, that the City may immediately terminate this Agreement, without providing Contractor with notice of default or an opportunity to cure, if the City determines that Contractor has failed to comply with any of the terms and conditions of this Agreement related to safety, indemnification or insurance coverage.

C. The City may terminate this Agreement as provided in Florida Statute section 287.135 and 448.095.

D. Termination of this Agreement acts as a termination of the BPA/CPA Form, any Purchase Orders issued by the City, and the Other Documents.

13. **Amendment**. Unless otherwise specifically provided in paragraph 4, this Agreement may be amended only in a writing executed by both Parties.

14. **Entire Agreement**. This Agreement constitutes the entire agreement between the Parties and supersedes all prior and contemporaneous agreements, whether oral or written, between them.

15. **Governing Law and Venue.** The laws of the State of Florida govern this Agreement. Venue for any action brought in state court must be in Pinellas County, St. Petersburg Division. Venue for any action brought in federal court must be in the Middle District of Florida, Tampa Division, unless a division is created in St. Petersburg or Pinellas County, in which case the action must be brought in that division. Each party waives any defense, whether asserted by motion or pleading, that the aforementioned courts are an improper or inconvenient venue. Moreover, the Parties consent to the personal jurisdiction of the aforementioned courts and irrevocably waive any objections to said jurisdiction.

16. **Compliance with Laws**. Contractor shall comply at all times with all federal, state, and local statutes, rules, regulations and ordinances, the federal and state constitutions, and the orders and decrees of lawful authorities having jurisdiction over the matter at issue (collectively, "Laws"), including but not limited to Florida laws regarding public records. Contractor hereby makes all certifications required under Florida Statute section 287.135. Contractor shall also comply with all applicable City policies and procedures.

17. **Third Party Beneficiary**. Notwithstanding anything to the contrary contained in this Agreement, persons or entities not a party to this Agreement may not claim any benefit hereunder or as third party beneficiaries hereto.

Docusign Envelope ID: 645E9FBE-B583-4B09-AF6A-BB372FD5C5DD

18. **No Liens.** Contractor shall not suffer any liens to be filed against any City property by reason of any work, labor, services or materials performed at or furnished to City property, to Contractor, or to anyone using City property through or under Contractor. Nothing contained in this Agreement may be construed as a consent on the part of the City to subject City property or any part thereof to any lien or liability under any Laws.

19. **No Construction against Preparer of Agreement.** This Agreement has been prepared by the City and reviewed by Contractor and its professional advisors. The City, Contractor and Contractor's professional advisors believe that this Agreement expresses their agreement and that it should not be interpreted in favor of either the City or Contractor or against the City or Contractor merely because of their efforts in preparing it.

20. **Use of Name.** Subject to the requirements of Florida laws regarding public records, neither party may use the other party's name in conjunction with any endorsement, sponsorship, or advertisement without the written consent of the named party, except that Contractor may refer to the City in client list.

21. **Non-appropriation.** The obligations of the City as to any funding required pursuant to this Agreement are limited to an obligation in any given year to budget, appropriate and pay from legally available funds, after monies for essential City services have been budgeted and appropriated, sufficient monies for the funding that is required during that year. Notwithstanding the foregoing, the City is not prohibited from pledging any legally available non-ad valorem revenues for any obligations heretofore or hereafter incurred, which pledge will be prior and superior to any obligation of the City pursuant to this Agreement.

22. **City Consent and Action.**

    A. For purposes of this Agreement, any required written permission, consent, acceptance, approval, or agreement by the City means the approval of the Mayor or his authorized designee, unless otherwise set forth in this Agreement or unless otherwise required to be exercised by City Council pursuant to the City Charter or applicable Laws.

    B. For purposes of this Agreement, any right of the City to take any action permitted, allowed, or required by this Agreement may be exercised by the Mayor or his authorized designee, unless otherwise set forth in this Agreement or unless otherwise required to be exercised by City Council pursuant to the City Charter or applicable Laws.

23. **Captions.** Captions are for convenience only and do not control or affect the meaning or construction of any of the provisions of this Agreement.

24. **Books and Records**. Contractor shall prepare in accordance with generally accepted accounting practice and shall keep, at the address for delivery of notices set forth in this Agreement, accurate books of account. All books and records with respect to this

Docusign Envelope ID: 645E9FBE-B583-4B09-AF6A-BB372FD5C5DD

Agreement must be kept by Contractor and must be open to examination or audit by the City for the Term and for the retention periods set forth in the most recent General Records Schedule GS1-SL for State and Local Government Agencies. Nothing herein may be construed to allow destruction of records that may be required to be retained longer by the statutes of the State of Florida.

25. **Survival.** All obligations and rights of any party arising during or attributable to the period prior to expiration or earlier termination of this Agreement, including but not limited to those obligations and rights related to indemnification, survive such expiration or earlier termination.

26. **Force Majeure.** In the event that either party hereto is delayed or hindered in or prevented from the performance required hereunder by reason of acts of God, failure of power, public health emergencies, strikes, lockouts, labor troubles, riots, war, insurrection, or other reason of like nature not the fault of the party ("Permitted Delay"), such party will be excused for the period of time equivalent to the delay caused by such Permitted Delay. Notwithstanding the foregoing, any extension of time for a Permitted Delay will be conditioned upon the party seeking an extension of time delivering written notice of such Permitted Delay to the other party within ten (10) days of the event causing the Permitted Delay.

27. **No Waiver**. No provision of this Agreement will be deemed waived by either party unless expressly waived in writing signed by the waiving party. No waiver may be implied by delay or any other act or omission of either party. No waiver by either party of any provision of this Agreement will be deemed a waiver of such provision with respect to any subsequent matter relating to such provision, and the City's consent respecting any action by Contractor does not constitute a waiver of the requirement for obtaining the City's consent respecting any subsequent action.

28. **Permits and Licenses**. Contractor shall obtain any and all necessary permits, licenses, certifications and approvals which may be required by any government agency in connection with Contractor's performance of this Agreement. Upon request of the City, Contractor shall provide the City with written evidence of such permits, licenses, certifications and approvals.

29. **Successors and Assigns**. This Agreement inures to the benefit of and is enforceable by and against the Parties, their heirs, personal representatives, successors, and assigns, including successors by way of reorganization.

30. **Subcontract**. The hiring or use of outside services or subcontractors in connection with the performance of Contractor's obligations under this Agreement is not permitted without the prior written approval of the City, which approval may be withheld by the City in its sole and absolute discretion. Contractor shall promptly pay all subcontractors and suppliers.

31. **Relationship of Parties**. Nothing contained herein may be deemed or construed by the

Docusign Envelope ID: 645E9FBE-B583-4B09-AF6A-BB372FD5C5DD

Parties, or by any third party, as creating the relationship of principal and agent or of partnership or of joint venture between the Parties, it being understood and agreed that nothing contained herein, nor any acts of the Parties, may be deemed to create any relationship between the Parties other than the relationship of independent contractors and principals of their own accounts.

32. **Contract Adjustments.**

A. Either party may propose additions, deletions or modifications to the Scope of Services ("Contract Adjustments") in whatever manner such party determines to be reasonably necessary for proper compliance with this Agreement. Proposals for Contract Adjustments must be submitted to the non-requesting party in the form agreed to by the Parties. Contract Adjustments must be effectuated through amendments to this Agreement made in accordance with this Agreement.

B. There may be no increase in the Services Pricing or the Maximum Annual Price on account of any Contract Adjustment made necessary or appropriate as a result of the mismanagement, improper act, or other failure of Contractor or its employees, agents or subcontractors to properly perform their obligations and functions under this Agreement.

C. In the event Contractor proposes a Contract Adjustment and the City does not approve such Contract Adjustment, Contractor will continue to perform the original Scope of Services in accordance with the terms and conditions of this Agreement.

D. Notwithstanding anything to the contrary contained in this Agreement, there may be no increase in the Services Pricing or the Maximum Annual Price except pursuant to an amendment to this Agreement made in accordance with this Agreement.

33. **Warranties.** In addition to any other warranties that may exist, Contractor warrants to the City that the services required to be performed by Contractor pursuant to this Agreement will be performed in a workmanlike manner consistent with industry standards reasonably applicable to the performance of such services.

34. **Non-Exclusive Agreement.** This Agreement imposes no obligation on the City to utilize Contractor for all of the work and services of this type, which may be needed during the Term. This is not an exclusive agreement. The City specifically reserves the right to concurrently contract with other companies for similar work and services if it deems such action to be in the City's best interest.

35. **Contractor Personnel.** The City reserves the right to require Contractor to replace any persons performing services pursuant to this Agreement, including but not limited to Contractor's employees and any affiliates' or subcontractors' employees, whom the City judges to be incompetent, careless, unsuitable or otherwise objectionable, or whose continued use is deemed contrary to the best interests of the City.

Docusign Envelope ID: 645E9FBE-B583-4B09-AF6A-BB372FD5C5DD

36. **Public Records.**

A. Contractor shall (i) keep and maintain public records (as defined in Florida's Public Records law) required by the City to perform the services pursuant to this Agreement; (ii) upon request from the City Clerk's Office, provide the City (at no cost to the City) with a copy of the requested records or allow the records to be inspected or copied within a reasonable time at a cost that does not exceed the cost provided under Florida's Public Records law or other applicable Laws; (iii) ensure that public records in Contractor's possession that are exempt or confidential and exempt from public records disclosure requirements are not disclosed except as authorized by applicable Laws for the Term and after the expiration or earlier termination of this Agreement; and (iv) after the expiration or earlier termination of this Agreement, at the City's request, either transfer, at no cost, to the City all public records in Contractor's possession within ten (10) days following the City's request and/or keep and maintain any public records required by the City to perform the services pursuant to this Agreement. If Contractor transfers all public records to the City upon the expiration or earlier termination of this Agreement, Contractor shall destroy any duplicate public records that are exempt or confidential and exempt from public records disclosure requirements. If Contractor keeps and maintains public records upon the expiration or earlier termination of this Agreement, Contractor shall meet all applicable requirements for retaining public records in accordance with this Agreement and all applicable Laws. At the City's request, Contractor shall provide all electronically stored public records to the City in a format approved by the City.

B. IF CONTRACTOR HAS QUESTIONS REGARDING THE APPLICATION OF CHAPTER 119, FLORIDA STATUTES, AS TO CONTRACTOR'S DUTY TO PROVIDE PUBLIC RECORDS RELATING TO THIS AGREEMENT, CONTACT THE CITY CLERK'S OFFICE (THE CUSTODIAN OF PUBLIC RECORDS) AT (727) 893-7448, CITY.CLERK@STPETE.ORG, OR 175 FIFTH ST. N., ST. PETERSBURG FL 33701.

C. Nothing contained herein may be construed to affect or limit Contractor's obligations including but not limited to Contractor's obligations to comply with all other applicable Laws and to maintain books and records pursuant to this Agreement.

37. **Appendices.** Each appendix to this Agreement, including all attachments to each appendix, is an essential part hereof and is attached hereto.

38. **Execution of Agreement**. This Agreement may be executed in any number of counterparts, each of which is deemed to be an original, and such counterparts collectively constitute a single original Agreement. Additionally, each party is authorized to sign this

Docusign Envelope ID: 645E9FBE-B583-4B09-AF6A-BB372FD5C5DD

Agreement electronically using any method authorized by applicable law or City policy, including any of the following: (i) a typed name on an electronic document; (ii) an image of a physical signature sent via email, fax, or other electronic transmission method; (iii) clicking a button to indicate agreement or acceptance in an electronic signature system; or (iv) a handwritten signature that is digitally captured on a touch device such as a tablet or smartphone.

(REMAINDER OF PAGE INTENTIONALLY LEFT BANK)

IN WITNESS WHEREOF the Parties have caused this Agreement to be executed by their duly authorized representatives on the day and date first above written.

LEW ELECTRICAL SERVICES:

DocuSigned by:
By: Sean Leedy
E7F9F702930946F...

Print: Sean Leedy

Title: CEO

CITY OF ST. PETERSBURG, FLORIDA: **ATTEST**

DocuSigned by:
By: Stephanie Swinson
A145E8759F46477...
Stephanie N. Swinson, Esq., Director
Procurement & Supply Management

DocuSigned by:
7FFE25B73DCF4B2...
City Clerk (Designee)

Provisions of Contract Approved:

DocuSigned by:
By: Patrick Linn
D942E77CFFF1480...
Print: Patrick Linn
Project Manager

Approved as to Form and Content:

DocuSigned by:
Sarah Lucker
51F97B94922C44E...
City Attorney (Designee)

00629206 S-03. IDIQ/on-demand services agreement (June 2022)

Docusign Envelope ID: 645E9FBE-B583-4B09-AF6A-BB372FD5C5DD

(Acknowledgment of Contractor)

Under penalties of perjury, I declare that I am authorized by the Company to execute the foregoing Agreement.

By: DocuSigned by: Sean Leedy E7F9F702930946F...

Print: Sean Leedy

Docusign Envelope ID: 645E9FBE-B583-4B09-AF6A-BB372FD5C5DD

1. Scope of Work

1.1. Intent

The City of St Petersburg ("City") is soliciting bids from qualified firms to provide electrical maintenance and repair services at City facilities on an as-needed basis. The City will award two (2) vendors, a primary and a secondary. **The City intends to award either the primary or secondary award to a City of St. Petersburg Certified SBE, upon availability.**

1.2. Contract Term

The term of the Agreement will be for a period of three (3) years from the date of award, with one (1), two (2) year renewal option by mutual written agreement of the parties.

1.3. Estimated Annual Expenditure

It is estimated that approximately $450,000 may be purchased annually under this solicitation. This is an estimate only and may vary.

1.4. Minimum Qualifications

At a minimum, Contractors must meet the following qualifications. Contractors failing to meet these requirements shall be considered non-responsive and removed from the evaluation process.

a. Have been in business for at least three (3) consecutive years in commercial electrical maintenance services.
b. Be a registered business with the State of Florida.
c. Possess the manufacturer certifications, facilities and equipment necessary and appropriate to perform the services throughout the Agreement period.
d. Maintain a current State of Florida Electrical Contractor License as a company as well as for technicians assigned to the Agreement.
e. Have 24/7/365 telephone service to receive emergency calls and; return calls within thirty (30) minutes by a service technician.
f. Have the ability to respond to calls for service within four (4) hours, regardless of workload.
g. Have sufficient inventory of original equipment manufacturer's (OEM) repair parts and materials to meet the requirements of the City on a consistent basis.
h. Maintain the minimum insurances as required by the City, for the Term of the Agreement (see Base Agreement).
i. Have and maintain financial resources to provide services, make payroll and meet other financial obligations for a minimum of sixty (60) calendar days from the date of service and provide proof thereof to the City.
j. Have the facilities, capabilities, equipment and staff to satisfactorily support services for the Term of the Agreement.
k. First line supervision shall have a minimum of three (3) years supervisory experience in commercial electrical maintenance services.
l. Technicians performing services on City's equipment must have a minimum of one year experience with the firm, three (3) years commercial experience with the applicable manufacturer's electrical equipment, be certified per manufacturer's recommendations and specifications, including applicable laws and regulations.

1.5. Vendor Responsibilities

At a minimum, Contractor shall provide and meet the following responsibilities:

Docusign Envelope ID: 645E9FBE-B583-4B09-AF6A-BB372FD5C5DD

a. Contractor shall submit evidence of a certification as an electrical Contractor.
b. Contractor shall provide invoices to individual departments with City-wide consolidated reporting capabilities.
c. Contractor shall provide a dedicated account manager who is available during normal business hours to administer the Agreement.
d. Contractor shall provide on-going training, at least one time per year, to its service/repair personnel related to electrical maintenance and repairs per manufacturer requirements, including but not limited to occupational health and safety administration (OSHA) requirements, environmental protection agency (EPA), Florida statutes, and standard Contractor work practices.
e. Contractor shall obtain all applicable permits required.
f. Contractor shall perform all electrical maintenance, repairs and diagnostic testing in accordance with all applicable federal, state and local laws (Laws), including, but not limited to EPA regulations, and OSHA regulations (all as amended).
g. Contractor shall furnish all necessary and emergency services as needed to maintain the continuous operation of City buildings.
h. All work, scheduled and emergency, shall be performed in a professional manner by only qualified, certified personnel, who are skilled in the performance of electrical services, using appropriate and calibrated equipment and diagnostic tools. Contractor shall furnish all access equipment such as ladders, lifts and scaffolding needed to perform the work described herein. All work shall be performed in accordance with the applicable codes and in a manner satisfactory to and acceptable by the City.
i. Contractor shall provide scheduled services consistently throughout the Term of the Agreement, that is, the same period each month, or quarter, or semi-annually or annually
j. Contractor shall perform work, with little or no interference, to private businesses or public travel and shall meet noise abatement standards as follows:

(1) Shall not exceed 80 decibels ("dBA") between the hours of 7:00 a.m. and 6:00 p.m., near residential or commercial property lines.
(2) Shall avoid equipment operation between the hours of 6:00 p.m. and 7:00 a. m., if required noise levels not to exceed 65 dBA.

k. Contractor shall be responsible for repair or replacement due to Contractor's improper installation, installation in violation of City code, and installation not in accordance with manufacturers' specifications.
l. Contractor shall not perform any service that does not comply with manufacturers' specifications without prior written authorization from the City project manager.
m. Contractor shall not remove employees from one job to work on another job, without project manager's approval, once work has begun.
n. Contractor shall meet with the City's project manager as often as necessary and mutually agreed.
o. Contractor's service personnel shall check in and out with the project manager during each visit and inform him/her of any issues limiting their ability to perform work.
p. Contractor shall provide a service report to the project manager upon completion of service, listing in detail what work or service was performed, materials used, and parts replaced; which shall be signed by the service technician and the project manager immediately upon completion of service.

Docusign Envelope ID: 645E9FBE-B583-4B09-AF6A-BB372FD5C5DD

q. Contractor shall receive prior approval from the project manager before shutting down equipment.
r. Contractor shall receive written approval by the project manager prior to making changes in operation or modifications to the equipment which might affect the life expectancy of the equipment.
s. Contractor shall at all times be present at the work site, or be represented at the work site by a responsible employee, or employees and so identified by the Contractor in a written identification notice to the City prior to the beginning of the work. Such notification shall include pertinent data such as e-mail addresses, office, cell and emergency phone numbers where said employee or employees shall be clothed with full authority to act for the Contractor in all cases, and to carry out any instructions relative to the work given by the City.
t. Contractor shall have a thorough understanding of all the requirements of this Agreement and fully train and instruct its employees in the standards and tasks required.
u. Subcontractors, permanent and temporary personnel must have prior written approval to provide services. Approval shall include background verification to be administered through the Procurement and Supply Management Department.
v. Contractor shall remove incompetent or disorderly workers when directed by the City.
w. Contractor shall be responsible for ensuring that all equipment and component parts are in good and proper operating condition throughout the Agreement from effective date through end date. Agreement close-out inspection will be conducted by the project manager within thirty (30) calendar days prior to the Agreement end date, at which time equipment and parts that are not in good and proper operating condition will be identified for pre-end date completion of repair.
x. In the event all services have not been completed by the Contractor by Agreement end date, the project manager shall inform the Contractor in writing and hold the last month's payment until all services have been performed.
y. Contractor shall provide a legible written, or e-mail service ticket to the project manager upon completion of services detailing all work performed, parts replaced, and service recommendations.
z. At own expense, Contractor shall provide and maintain barricades, lights and protect life and property at work site; take necessary precaution to prevent work from being exposed to damage, elements and injury, until the City accepts work.
aa. Contractor shall provide a performance and payment bond for each project.

1.6. City's Responsibilities

At a minimum, City shall provide and meet the following responsibilities:

a. Each City department shall provide a single point of contact (Project Manager) to administer the Agreement.
b. Each City department Project Manager shall be responsible for notifying the Contractor when building maintenance and repair services are required and for providing the location and address. The department's Project Manager or shall inspect and approve all work, before payment is made.
c. City's Permitting Division shall approve all work, when applicable.
d. City shall reserve the right to inspect all business locations the Contractor and/or subcontractor's business operates, prior to award and/or during the term of this contract.
e. City will be responsible for providing access to the work site.

Docusign Envelope ID: 645E9FBE-B583-4B09-AF6A-BB372FD5C5DD

f. Upon full execution of the contract documents and delivery by the contractor of all required bonds and certificates to the procurement analyst prior to execution of the contract, the department Project Manager shall prepare and issue to the contractor, a Notice to Proceed. The Notice to Proceed will be forwarded to the contractor by e-mail. The department Project Manager shall monitor the progress of the contract/projects from the date of its commencement forward.
g. Upon completion of work, the department Project Manager shall issue a notice of completion to the contractor via e- mail.

Docusign Envelope ID: 645E9FBE-B583-4B09-AF6A-BB372FD5C5DD

Appendix B
Services Pricing

CITY FACILITIES:

Line Item	Description	Unit of Measure	Unit Cost
1	Licensed Journeyman Electrician MONDAY - FRIDAY 8 AM - 5 PM	HR	$80.00
2	Licensed Journeyman Electrician MONDAY - FRIDAY 5:01 PM - 7.59 AM	HR	$120.00
3	Licensed Journeyman Electrician WEEKENDS & HOLIDAYS 8 AM- 5 PM	HR	$120.00
4	Licensed Journeyman Electrician WEEKENDS & HOLIDAYS 5:01 PM - 7:59 AM	HR	$120.00
5	Electrician's Helper/Apprentice MONDAY - FRIDAY 8 AM - 5P M	HR	$65.00
6	Electrician's Helper/Apprentice MONDAY - FRIDAY 5:01 PM - 7.59 AM	HR	$97.50
7	Electrician's Helper/Apprentice WEEKENDS & HOLIDAYS 8 AM- 5 PM	HR	$97.50
8	Electrician's Helper/Apprentice WEEKENDS & HOLIDAYS 5:01 PM - 7:59 AM	HR	$97.50

AIRFIELD AND PORT LIGHTING FOR THE ALBERT WHITTED AIRPORT AND CRUISE PORT:

Line Item	Description	Unit of Measure	Unit Cost
1	Licensed Journeyman Electrician MONDAY - FRIDAY 8 AM - 5 PM	HR	$80.00
2	Licensed Journeyman Electrician MONDAY - FRIDAY 5:01 PM - 7.59 AM	HR	$120.00
3	Licensed Journeyman Electrician WEEKENDS & HOLIDAYS 8 AM- 5 PM	HR	$120.00
4	Licensed Journeyman Electrician WEEKENDS & HOLIDAYS 5:01 PM - 7:59 AM	HR	$120.00
5	Electrician's Helper/Apprentice MONDAY - FRIDAY 8 AM - 5P M	HR	$70.00
6	Electrician's Helper/Apprentice MONDAY - FRIDAY 5:01 PM - 7.59 AM	HR	$110.00
7	Electrician's Helper/Apprentice WEEKENDS & HOLIDAYS 8 AM- 5 PM	HR	$110.00
8	Electrician's Helper/Apprentice WEEKENDS & HOLIDAYS 5:01 PM - 7:59 AM	HR	$110.00

Docusign Envelope ID: 645E9FBE-B583-4B09-AF6A-BB372FD5C5DD

ELECTRICAL MAINTENANCE AND REPAIR SERVICES PERFORMED AT COSME WATER TREATMENT PLANT:

Line Item	Description	Unit of Measure	Unit Cost
1	Licensed Journeyman Electrician MONDAY - FRIDAY 8 AM - 5 PM	HR	$80.00
2	Licensed Journeyman Electrician MONDAY - FRIDAY 5:01 PM - 7.59 AM	HR	$120.00
3	Licensed Journeyman Electrician WEEKENDS & HOLIDAYS 8 AM- 5 PM	HR	$120.00
4	Licensed Journeyman Electrician WEEKENDS & HOLIDAYS 5:01 PM - 7:59 AM	HR	$120.00
5	Electrician's Helper/Apprentice MONDAY - FRIDAY 8 AM - 5P M	HR	$65.00
6	Electrician's Helper/Apprentice MONDAY - FRIDAY 5:01 PM - 7.59 AM	HR	$97.50
7	Electrician's Helper/Apprentice WEEKENDS & HOLIDAYS 8 AM- 5 PM	HR	$97.50
8	Electrician's Helper/Apprentice WEEKENDS & HOLIDAYS 5:01 PM - 7:59 AM	HR	$97.50

EQUIPTMENT RATE SCHEDULE:

Line Item	Description	Unit of Measure	Unit Cost
1	Aerial (Bucket) Truck, 50' with Operator MONDAY - FRIDAY 8 AM - 5 PM	HR	$135.00
2	Aerial (Bucket) Truck, 50' with Operator MONDAY - FRIDAY 5:01 PM - 7.59 AM	HR	$202.50
3	Aerial (Bucket) Truck, 50' with Operator WEEKENDS & HOLIDAYS 8 AM- 5 PM	HR	$202.50
4	Aerial (Bucket) Truck, 50' with Operator WEEKENDS & HOLIDAYS 5:01 PM - 7:59 AM	HR	$202.50
5	Line (Pole-Setting) Boom Truck with Operator MONDAY - FRIDAY 8 AM - 5P M	HR	$135.00
6	Line (Pole-Setting) Boom Truck with Operator MONDAY - FRIDAY 5:01 PM - 7.59 AM	HR	$202.50
7	Line (Pole-Setting) Boom Truck with Operator WEEKENDS & HOLIDAYS 8 AM- 5 PM	HR	$202.50
8	Line (Pole-Setting) Boom Truck with Operator WEEKENDS & HOLIDAYS 5:01 PM - 7:59 AM	HR	$202.50

Memorandum

Date: December 9, 2025
To: Mayor and Board of Commissioners
Through: Janina Lewis, Procurement Services Director
From: Patricia Hall, Senior Procurement Analyst
Subject: Award File No. 260060-C-PH, Goodyear Tires and Services **(Chris Cotta Public Works Director, Jake Schaff Fleet Manager, Janina Lewis Procurement Services Director)**

Recommendation

Award File No. 260060-C-PH, Goodyear Tires and Services, to Goodyear Auto Service Center of Tarpon Springs, utilizing the Florida Sheriff's Association Contract No. FSA25-TRS27.0 in an estimated annual amount of $70,000 for the period of December 12, 2025, through March 31, 2027, for the Public Works Department - Fleet Division. Purchase orders will only be issued against approved budgets.

Background

The purpose of this contract is to utilize Goodyear Auto Service Center of Tarpon Springs located on Tarpon Avenue for tires and services for a wide range of City vehicles including Police SUVs/ Chargers, light trucks/equipment and passenger vehicles. This Goodyear location is the only one within the City of Tarpon Springs and because of its proximity to the fleet maintenance shop, critical City vehicles can return to daily operations more quickly with minimal downtime (see attached memo).

The Florida Sheriff's Association Contract No. FSA25-TRS27.0 was competitively solicited and is available for use by any governmental entity.

Funding

Funding will be identified as parts and services are needed.

Strategic Plan Objective

N/A

City of Tarpon Springs, Florida

Public Works Dept.
325 E. Pine Street
Tarpon Springs, FL 34689
(727) 942-5606

To: Janina Lewis, Procurement Services Director

Through: Chris Cotta, Public Works Director Chris Cotta

From: Jake Schaff, Fleet Manager Jake Schaff

Date: November 20, 2025

Re: Award File No. 260060-C-PH, Goodyear Auto Service Center of Tarpon Springs

---

Recommendation:
Award File No. 260060-C-PH, Goodyear Auto Service Center of Tarpon Springs
For tires and services utilizing the Florida Sherriff's Association Contract No. FSA25-TRS27.0 for the contact period of December 12, 2025, through March 31, 2027, in the estimated annual amount of 70,000.

Background:

To support efficient operations across all city departments, we utilize the Goodyear Auto Service Center on Tarpon Avenue, the only Goodyear location in Tarpon Springs, for tire sales, service, and inventory needs for our light-duty vehicles. Its close proximity to the Fleet Shop allows critical vehicles to be serviced and returned to operation quickly, reducing downtime compared to using alternative providers. Additionally, the center helps us maintain a stocked inventory of 35 tires, ensuring we can promptly address tire needs and keep essential vehicles on the road. Consequently, this partnership enables us to maintain reliable and timely service for the city's fleet.

Funding:

Funding will be determined as needed.

FSA Cooperative Purchasing Program



FSA25-TRS27.0: Tires Contract Packet

PROTECTING, LEADING & UNITING SINCE 1893
FLORIDA SHERIFFS ASSOCIATION
2617 Mahan Drive
Tallahassee, Florida 32308
p: (850) 877-2165 f: (850) 878-8665
flsheriffs.org

NOTICE OF FINAL AWARD
CONTRACT FSA25-TRS27.0 Tires

Date: April 1, 2025

To: All Prospective Bidders and Purchasers

From: Matt Dunagan, Executive Director
Sarrah Glassner, Deputy Executive Director of Administration

Re: Contract Number FSA25-TRS27.0 Tires: Contract Awards

We are pleased to announce that the Florida Sheriffs Association (FSA) has successfully completed its latest nationwide cooperative bid for Tires. This contract is in effect beginning April 1, 2025, through March 31, 2027.

This notification is for the Florida Sheriffs Association (FSA), Cooperative Purchasing Program (CPP) Award for contract FSA25-TRS27.0 Tires. All bids were received in a timely manner, reviewed, and evaluated by the FSA and its Fleet Advisory Committee.

The contract specifications include:

- Law Enforcement Pursuit & Emergency High Speed Vehicle Tires
- Passenger Vehicle Tires
- Light Truck & Related Vehicle Tires
- Commercial Truck & Related Vehicle Tires
- Off Road Equipment Tires
- Agricultural Farm & Implement Tires
- Specialty Tires
- Industrial – Solid Rubber Tires
- Rubber Tracks for Tractors & Equipment
- Re-Tread Tires

The competitive process for this award began in October 2024, when the FSA Fleet Advisory Committee, bidders, and stakeholders provided input regarding vehicle and equipment procurement needs. Specifications were developed based on prior years' activity, and new additions were included based on feedback from the FSA Committee, bidders, and stakeholders.

Advertisements of the Invitation to Bid (ITB) were placed on the FSA website on October 1, 2024, and within the Florida Administrative Register on October 1, 2024 and November 1, 2024.

From the ITB, nine bidders completed the pre-bid process or submitted required FSA waivers. Of these respondents, eight submitted bids. Seven responsive bidders were awarded after bids were evaluated by the FSA Fleet Advisory Committee and FSA staff.

The Florida Sheriffs Association Cooperative Purchasing Program has followed the Contract Terms and Conditions to procure this contract.

Contract prices are extended and guaranteed to any local government or political subdivision of the state, public educational institutions, other public agencies or authorities with the State of Florida, and other entities approved by the manufacturer to participate in this contract.

Out-of-state sales are permitted under this contract. All purchasers are bound by their local governing purchasing ordinances, rules and regulations.

All awarded vendors are governed by their manufacturer agreements and the Contract Terms and Conditions.

List of Intended Awards in Alphabetical Order:

1. Bridgestone Americas Tire Operations
2. Continental Tire the Americas, LLC.
3. Michelin North America, Inc.
4. Sumitomo Rubber North America, Inc.
5. The Goodyear Tire & Rubber Company
6. Toyo Tire USA Corp
7. Yokohama Tire Corporation

The final award page document for all awarded bid items is attached.

FSA Cooperative Purchasing Program



FSA25-TRS27.0: Tires
Final Award Report

Bid Award

Contract: FSA25-TRS27.0, Tires

Group: Law Enforcement Pursuit & Emergency High Speed Vehicle Tires

Item: 1, Various, Various

Description: See FSA Base Specifications document.

Model Upgrade/Downgrade:

Zone	Rank	Vendor	Build File
Statewide	Primary	Bridgestone Americas Tire Operations	Build
	Primary	Continental Tire the Americas, LLC	Build
	Primary	Michelin North America, Inc.	Build
	Primary	The Goodyear Tire & Rubber Company	Build

Bid Award

Contract: FSA25-TRS27.0, Tires

Group: Passenger Vehicle Tires

Item: 2, Various, Various

Description: See FSA Base Specifications document.

Model Upgrade/Downgrade:

Zone	Rank	Vendor	Build File
Statewide	Primary	Bridgestone Americas Tire Operations	Build
	Primary	Continental Tire the Americas, LLC	Build
	Primary	Michelin North America, Inc.	Build
	Primary	The Goodyear Tire & Rubber Company	Build
	Primary	Toyo Tire USA Corp	Build

Bid Award

Contract: FSA25-TRS27.0, Tires

Group: Light Truck & Related Vehicle Tires

Item: 3, Various, Various

Description: See FSA Base Specifications document.

Model Upgrade/Downgrade:

Zone	Rank	Vendor	Build File
Statewide	Primary	Bridgestone Americas Tire Operations	Build
	Primary	Continental Tire the Americas, LLC	Build
	Primary	Michelin North America, Inc.	Build
	Primary	The Goodyear Tire & Rubber Company	Build
	Primary	Toyo Tire USA Corp	Build
	Primary	YokohamaTire Corporation	Build

Bid Award

Contract: FSA25-TRS27.0, Tires

Group: Commercial Truck & Related Vehicle Tires

Item: 4, Various, Various

Description: See FSA Base Specifications document.

Model Upgrade/Downgrade:

Zone	Rank	Vendor	Build File
Statewide	Primary	Bridgestone Americas Tire Operations	Build
	Primary	Continental Tire the Americas, LLC	Build
	Primary	Michelin North America, Inc.	Build
	Primary	Sumitomo Rubber North America, Inc	Build
	Primary	The Goodyear Tire & Rubber Company	Build
	Primary	Toyo Tire USA Corp	Build
	Primary	YokohamaTire Corporation	Build

Bid Award

Contract: FSA25-TRS27.0, Tires

Group: Off Road Equipment Tires

Item: 5, Various, Various

Description: See FSA Base Specifications document.

Model Upgrade/Downgrade:

Zone	Rank	Vendor	Build File
Statewide	Primary	Bridgestone Americas Tire Operations	Build
	Primary	Continental Tire the Americas, LLC	Build
	Primary	Michelin North America, Inc.	Build
	Primary	The Goodyear Tire & Rubber Company	Build

Bid Award

Contract: FSA25-TRS27.0, Tires

Group: Agricultural Farm & Implement Tires

Item: 6, Various, Various

Description: See FSA Base Specifications document.

Model Upgrade/Downgrade:

Zone	Rank	Vendor	Build File
Statewide	Primary	Bridgestone Americas Tire Operations	Build
	Primary	Michelin North America, Inc.	Build
	Primary	The Goodyear Tire & Rubber Company	Build

Bid Award

Contract: FSA25-TRS27.0, Tires

Group: Specialty Tires

Item: 7, Various, Various

Description: See FSA Base Specifications document.

Model Upgrade/Downgrade:

Zone	Rank	Vendor	Build File
Statewide	Primary	Bridgestone Americas Tire Operations	Build
	Primary	Continental Tire the Americas, LLC	Build

Bid Award

Contract: FSA25-TRS27.0, Tires

Group: Industrial - Solid Rubber Tires

Item: 10, Various, Various

Description: See FSA Base Specifications document.

Model Upgrade/Downgrade:

Zone	Rank	Vendor	Build File
Statewide	Primary	Continental Tire the Americas, LLC	Build
	Primary	The Goodyear Tire & Rubber Company	Build

Bid Award

Contract: FSA25-TRS27.0, Tires

Group: Rubber Tracks for Tractors & Equipment

Item: 11, Various, Various

Description: See FSA Base Specifications document.

Model Upgrade/Downgrade:

Zone	Rank	Vendor	Build File
Statewide	Primary	Michelin North America, Inc.	Build
	Primary	The Goodyear Tire & Rubber Company	Build

Bid Award

Contract: FSA25-TRS27.0, Tires

Group: Re-Tread Tire

Item: 12, Various, Various

Description: See FSA Base Specifications document.

Model Upgrade/Downgrade:

Zone	Rank	Vendor	Build File
Statewide	Primary	Bridgestone Americas Tire Operations	Build
	Primary	Continental Tire the Americas, LLC	Build
	Primary	Michelin North America, Inc.	Build
	Primary	The Goodyear Tire & Rubber Company	Build

FSA Cooperative Purchasing Program

FSA25-TRS27.0: Tires
Awarded Vendor Contract Signature Pages

Docusign Envelope ID: C41993FB-E8C4-436A-8ABF-6C8C58A4E003

CONTRACT SIGNATURE FORM

By submitting a response to this Invitation to Bid and signing this form, the Bidder declares that he or she has read, and the company understands, accepts and will comply with the terms, conditions and specifications of this bid and any addenda issued. The failure or omission to review this document shall in no way relieve the authorized agent of obligations with respect to this bid. The submission of a bid and signature below shall be taken as evidence of acceptance of the terms and conditions of this bid.

The Bidder further declares that no other persons other than the authorized agent herein named has any interest in this bid or in the contract to be taken, and that it is made without any connection with any other person or persons making proposal for the same article, and is in all respects fair and without collusion or fraud.

The Bidder further declares that they have carefully examined the specifications and is thoroughly familiar with its provisions and with the quality, type and grade of materials required.

The Bidder further declares that they have provided a discount on all factory options included in this bid, and such discount will be included in all purchase orders.

The Bidder further declares that the company understands the financial responsibility associated with this bid as stated and further declares that it has the ability to meet the financial responsibility associated with this bid.

The Bidder further declares that the company will furnish the items awarded for the price bid.

FSA Contract Number FSA25-TRS27.0: Tires

Bidder Company Name Bridgestone Americas Tire Operations

Business Address 200 4th ave S.
Nashville, TN 37201

Name of Authorized Agent Douglas Jacobsen

Email address of authorized agent jacobsendouglas@bfusa.com

Signature Signed by: Douglas Jacobsen 600A1E9DEC284B9...

Date 3/28/2025

Docusign Envelope ID: E026EE87-2886-4DED-9A3E-17CCFBB0033D

CONTRACT SIGNATURE FORM

By submitting a response to this Invitation to Bid and signing this form, the Bidder declares that he or she has read, and the company understands, accepts and will comply with the terms, conditions and specifications of this bid and any addenda issued. The failure or omission to review this document shall in no way relieve the authorized agent of obligations with respect to this bid. The submission of a bid and signature below shall be taken as evidence of acceptance of the terms and conditions of this bid.

The Bidder further declares that no other persons other than the authorized agent herein named has any interest in this bid or in the contract to be taken, and that it is made without any connection with any other person or persons making proposal for the same article, and is in all respects fair and without collusion or fraud.

The Bidder further declares that they have carefully examined the specifications and is thoroughly familiar with its provisions and with the quality, type and grade of materials required.

The Bidder further declares that they have provided a discount on all factory options included in this bid, and such discount will be included in all purchase orders.

The Bidder further declares that the company understands the financial responsibility associated with this bid as stated and further declares that it has the ability to meet the financial responsibility associated with this bid.

The Bidder further declares that the company will furnish the items awarded for the price bid.

FSA Contract Number FSA25-TRS27.0: Tires

Bidder Company Name Continental Tire the Americas, LLC

Business Address 1794 MacMillian Park Drive, Fort Mill SC 29707

Name of Authorized Agent Shaun Uys Todd Pearce

Email address of authorized agent Shaun.Uys@conti-na.com christopher.gilbert@conti-na.com

Signature DocuSigned by: Shaun Uys 1FA239DFB1404E0... DocuSigned by: Todd Pearce A83B65F77A1C4F2...

Date 04/11/2025 04/09/2025

Docusign Envelope ID: 799E7060-7C29-4F57-BAA3-C8DE8D29D811

CONTRACT SIGNATURE FORM

By submitting a response to this Invitation to Bid and signing this form, the Bidder declares that he or she has read, and the company understands, accepts and will comply with the terms, conditions and specifications of this bid and any addenda issued. The failure or omission to review this document shall in no way relieve the authorized agent of obligations with respect to this bid. The submission of a bid and signature below shall be taken as evidence of acceptance of the terms and conditions of this bid.

The Bidder further declares that no other persons other than the authorized agent herein named has any interest in this bid or in the contract to be taken, and that it is made without any connection with any other person or persons making proposal for the same article, and is in all respects fair and without collusion or fraud.

The Bidder further declares that they have carefully examined the specifications and is thoroughly familiar with its provisions and with the quality, type and grade of materials required.

The Bidder further declares that they have provided a discount on all factory options included in this bid, and such discount will be included in all purchase orders.

The Bidder further declares that the company understands the financial responsibility associated with this bid as stated and further declares that it has the ability to meet the financial responsibility associated with this bid.

The Bidder further declares that the company will furnish the items awarded for the price bid.

FSA Contract Number FSA25-TRS27.0: Tires

Bidder Company Name Goodyear Tire & Rubber Co.

Business Address 200 Innovation Way
Akron OH 44316

Name of Authorized Agent Brian Dougherty

Email address of authorized agent brian_dougherty@goodyear.com

Signature DocuSigned by: Brian Dougherty B4B738C60E42497...

Date 4/1/2025

Docusign Envelope ID: E3082887-B138-4647-B607-AD35A8450880

CONTRACT SIGNATURE FORM

By submitting a response to this Invitation to Bid and signing this form, the Bidder declares that he or she has read, and the company understands, accepts and will comply with the terms, conditions and specifications of this bid and any addenda issued. The failure or omission to review this document shall in no way relieve the authorized agent of obligations with respect to this bid. The submission of a bid and signature below shall be taken as evidence of acceptance of the terms and conditions of this bid.

The Bidder further declares that no other persons other than the authorized agent herein named has any interest in this bid or in the contract to be taken, and that it is made without any connection with any other person or persons making proposal for the same article, and is in all respects fair and without collusion or fraud.

The Bidder further declares that they have carefully examined the specifications and is thoroughly familiar with its provisions and with the quality, type and grade of materials required.

The Bidder further declares that they have provided a discount on all factory options included in this bid, and such discount will be included in all purchase orders.

The Bidder further declares that the company understands the financial responsibility associated with this bid as stated and further declares that it has the ability to meet the financial responsibility associated with this bid.

The Bidder further declares that the company will furnish the items awarded for the price bid.

FSA Contract Number FSA25-TRS27.0: Tires

Bidder Company Name Michelin North America

Business Address 1 Parkway S, Greenville, SC 2961

Name of Authorized Agent Todd Hanlon

Email address of authorized agent Todd.Hanlon@michelin.com

Signature Signed by: Todd Hanlon 1D75FCD6C41147A...

Date 3/18/2025

Docusign Envelope ID: 7909EDD3-D2EF-4EC4-88F4-8F060FC8F43F

CONTRACT SIGNATURE FORM

By submitting a response to this Invitation to Bid and signing this form, the Bidder declares that he or she has read, and the company understands, accepts and will comply with the terms, conditions and specifications of this bid and any addenda issued. The failure or omission to review this document shall in no way relieve the authorized agent of obligations with respect to this bid. The submission of a bid and signature below shall be taken as evidence of acceptance of the terms and conditions of this bid.

The Bidder further declares that no other persons other than the authorized agent herein named has any interest in this bid or in the contract to be taken, and that it is made without any connection with any other person or persons making proposal for the same article, and is in all respects fair and without collusion or fraud.

The Bidder further declares that they have carefully examined the specifications and is thoroughly familiar with its provisions and with the quality, type and grade of materials required.

The Bidder further declares that they have provided a discount on all factory options included in this bid, and such discount will be included in all purchase orders.

The Bidder further declares that the company understands the financial responsibility associated with this bid as stated and further declares that it has the ability to meet the financial responsibility associated with this bid.

The Bidder further declares that the company will furnish the items awarded for the price bid.

FSA Contract Number FSA25-TRS27.0: Tires

Bidder Company Name Sumitomo Rubber North America, Inc

Business Address 8656 Haven Ave
Rancho Cucamonga, CA 91730

Name of Authorized Agent Joel Aldridge

Email address of authorized agent jaldridge@falkentire.com

Signature Signed by: Joel Aldridge 495DB4D644D0426...

Date 3/24/2025

Docusign Envelope ID: 30A4AC68-7A66-46B7-B758-631E0772D81D

CONTRACT SIGNATURE FORM

By submitting a response to this Invitation to Bid and signing this form, the Bidder declares that he or she has read, and the company understands, accepts and will comply with the terms, conditions and specifications of this bid and any addenda issued. The failure or omission to review this document shall in no way relieve the authorized agent of obligations with respect to this bid. The submission of a bid and signature below shall be taken as evidence of acceptance of the terms and conditions of this bid.

The Bidder further declares that no other persons other than the authorized agent herein named has any interest in this bid or in the contract to be taken, and that it is made without any connection with any other person or persons making proposal for the same article, and is in all respects fair and without collusion or fraud.

The Bidder further declares that they have carefully examined the specifications and is thoroughly familiar with its provisions and with the quality, type and grade of materials required.

The Bidder further declares that they have provided a discount on all factory options included in this bid, and such discount will be included in all purchase orders.

The Bidder further declares that the company understands the financial responsibility associated with this bid as stated and further declares that it has the ability to meet the financial responsibility associated with this bid.

The Bidder further declares that the company will furnish the items awarded for the price bid.

FSA Contract Number FSA25-TRS27.0: Tires

Bidder Company Name Toyo Tires USA

Business Address 3565 Harbor Blvd, Costa Mesa, CA 92626

Name of Authorized Agent Eric Van Namee

Email address of authorized agent vannameee@toyotires.com

Signature Signed by: Eric Van Namee C5D954D9968A4C7...

Date 3/19/2025

Docusign Envelope ID: B70DFB86-E1E8-47A6-844A-9252674679BD

CONTRACT SIGNATURE FORM

By submitting a response to this Invitation to Bid and signing this form, the Bidder declares that he or she has read, and the company understands, accepts and will comply with the terms, conditions and specifications of this bid and any addenda issued. The failure or omission to review this document shall in no way relieve the authorized agent of obligations with respect to this bid. The submission of a bid and signature below shall be taken as evidence of acceptance of the terms and conditions of this bid.

The Bidder further declares that no other persons other than the authorized agent herein named has any interest in this bid or in the contract to be taken, and that it is made without any connection with any other person or persons making proposal for the same article, and is in all respects fair and without collusion or fraud.

The Bidder further declares that they have carefully examined the specifications and is thoroughly familiar with its provisions and with the quality, type and grade of materials required.

The Bidder further declares that they have provided a discount on all factory options included in this bid, and such discount will be included in all purchase orders.

The Bidder further declares that the company understands the financial responsibility associated with this bid as stated and further declares that it has the ability to meet the financial responsibility associated with this bid.

The Bidder further declares that the company will furnish the items awarded for the price bid.

FSA Contract Number FSA25-TRS27.0: Tires

Bidder Company Name YokohamaTire corporation

Business Address 1 MacArthur Place
Santa Ana CA 92707

Name of Authorized Agent Jeff Harman

Email address of authorized agent jeff.harman@yokohamatire.com

Signature Signed by: Jeff Harman 0974FE0D11044C2...

Date 3/18/2025

FSA Cooperative Purchasing Program



FSA25-TRS27.0: Tires Authorized Sale and Service Centers

FSA TIRE CONTRACT: FSA25-TRS27.0

TIRE MANUFACTURER AUTHORIZED SALES AND SERVICE CENTERS

MANUFACTURER NAME: Bridgestone Americas Tire Operations, LLC
MANUFACTURER FEIN #: 88-0335067

Manufacturer Authorized Sales & Service Center Name	Tire Brands	Street Address	City	County	Zip Code	Telephone #	E-Mail To Accept Purchase Orders	MWBE Status (if available) Y = MWBE
NORTHBROOK AUTO & TIRE	BRIDGESTONE/FIRESTONE	11220 WILES RD	CORAL SPRINGS	BROWARD	33076-2122	(954) 345-9925	www.b.d.lewis@worldnet.att.net	
CALLAGHAN TIRE	BRIDGESTONE/FIRESTONE	7075 12TH ST W	JACKSONVILLE	DUVAL	32220-2858	(904) 693-4999	wowens@callaghantire.com	
W&L TIRE & WHEEL INC	BRIDGESTONE/FIRESTONE	820 W JEFFERSON ST	QUINCY	GADSDEN	32351-2206	(850) 627-8830	wltire12@tds.net	Veteran
TLC 103 TAMPA	BRIDGESTONE/FIRESTONE	4942 JOANNE KEARNEY BLVD	TAMPA	HILLSBOROUGH	33619-8601	(813) 621-3103	wain.casteel@tirehub.com	
SUMTER TIRE CO	BRIDGESTONE/FIRESTONE	810 N MAIN ST	WILDWOOD	SUMTER	34785-3845	(352) 748-6556	usumtertirea@cfl.rr.com	
TOTAL TIRE OF PALM CITY INC	BRIDGESTONE/FIRESTONE	3050 SW MARTIN HWY	PALM CITY	MARTIN	34990-3142	(772) 287-1213	totaltires@cs.com	
TOTAL ROADSIDE SERVICES INC	BRIDGESTONE/FIRESTONE	3176 HWY 710	OKEECHOBEE	OKEECHOBEE	34974-3532	(863) 634-6839	totalroadsideservices@hotmail.com	
BOULEVARD TIRE CENTER	BRIDGESTONE/FIRESTONE	2964 63RD AVE EAST	BRADENTON	MANATEE	34203-5307	(863) 578-8602	tkeesling@boulevardtire.com	
TOWN & COUNTRY TIRE SERVICE LLC	BRIDGESTONE/FIRESTONE	317 HOWARD ST E	LIVE OAK	SUWANNEE	32064-3237	(386) 362-4535	tires@windstream.net	
TIRE MART OF CHIEFLAND INC	BRIDGESTONE/FIRESTONE	1530 NW 26TH AVE	CHIEFLAND	LEVY	32626-9134	(352) 493-0013	TIREMARTCHIEFLAND@GMAIL.COM	
SOUTHERN TIRE MART	BRIDGESTONE/FIRESTONE	285 SAND MINE RD	DEFUNIAK SPRINGS	WALTON	32435-5736	(850) 951-2180	TDUFF@STMTIRES.COM	
CALLAGHAN TIRE	BRIDGESTONE/FIRESTONE	6425 CAUSEWAY BLVD	TAMPA	HILLSBOROUGH	33619-6349	(800) 330-8672	tampa@callaghantire.com	
AMERICAN TIRE DISTRIBUTORS INC	BRIDGESTONE/FIRESTONE	4723 CAPITAL CIR NW	TALLAHASSEE	LEON	32303-7240	(850) 422-2600	TallahasseeReceiving@atd-us.com	
SOUTHERN TIRE MART	BRIDGESTONE/FIRESTONE	7528 PENNY RD	PANAMA CITY	BAY	32404-5506	(850) 914-0092	stm96@stmtires.com	
SOUTHERN TIRE MART	BRIDGESTONE/FIRESTONE	1505 COMMERCE BLVD	MIDWAY	GADSDEN	32343-6625	(850) 580-4010	Stacy.Long@stmtires.com	
BOULEVARD RETREAD CENTER	BRIDGESTONE/FIRESTONE	1350 W MCNAB RD	FORT LAUDERDALE	BROWARD	33309-1120	(954) 797-1707	smeents@boulevardtire.com	
BOULEVARD RETREAD CENTER INC	BRIDGESTONE/FIRESTONE	30938 US HWY 27	LAKE HAMILTON	POLK	33851-0000	(386) 734-6447	smeents@boulevardtire.com	
BOULEVARD RETREAD CENTER INC	BRIDGESTONE/FIRESTONE	1201 BISCAYNE BLVD	DELAND	VOLUSIA	32724-2105	(386) 740-0279	smeents@boulevardtire.com	
BOULEVARD TIRE CENTER	BRIDGESTONE/FIRESTONE	800 S NOVA RD	DAYTONA BEACH	VOLUSIA	32114-5802	(386) 258-8129	smeents@boulevardtire.com	
BOULEVARD TIRE CENTER	BRIDGESTONE/FIRESTONE	625 W MAIN ST	BARTOW	POLK	33830-3360	(863) 578-8602	smeents@boulevardtire.com	
BOULEVARD TIRE CENTER	BRIDGESTONE/FIRESTONE	1701 S RIDGEWOOD AVE	EDGEWATER	VOLUSIA	32132-3655	(386) 734-6447	smeents@boulevardtire.com	
BOULEVARD TIRE CENTER	BRIDGESTONE/FIRESTONE	5105 SW 41ST BLVD	GAINESVILLE	ALACHUA	32608-4930	(352) 371-6209	smeents@boulevardtire.com	
BOULEVARD TIRE CENTER	BRIDGESTONE/FIRESTONE	1205 BISCAYNE BLVD	DELAND	VOLUSIA	32724-2105	(386) 740-0279	smeents@boulevardtire.com	
BOULEVARD TIRE CENTER	BRIDGESTONE/FIRESTONE	1419 SW 12TH AVE	OCALA	MARION	34471-0501	(863) 578-8602	smeents@boulevardtire.com	
BOULEVARD TIRE CENTER	BRIDGESTONE/FIRESTONE	160 SUNBURST RD	DUNDEE	POLK	33838-4146	(863) 547-9443	smeents@boulevardtire.com	
BOULEVARD TIRE CENTER	BRIDGESTONE/FIRESTONE	1609 N COCOA BLVD	COCOA	BREVARD	32922-6935	(321) 639-3077	smeents@boulevardtire.com	
BOULEVARD TIRE CENTER	BRIDGESTONE/FIRESTONE	20 N ORANGE BLOSSOM TRL	ORLANDO	ORANGE	32805-1802	(386) 734-6447	smeents@boulevardtire.com	
BOULEVARD TIRE CENTER	BRIDGESTONE/FIRESTONE	201 N STATE ST	BUNNELL	FLAGLER	32110-8024	(386) 586-6088	smeents@boulevardtire.com	
BOULEVARD TIRE CENTER	BRIDGESTONE/FIRESTONE	2750 S KINGS HWY	FORT PIERCE	ST LUCIE	34945-2600	(772) 489-8473	smeents@boulevardtire.com	
BOULEVARD TIRE CENTER	BRIDGESTONE/FIRESTONE	2788 ENTERPRISE RD	ORANGE CITY	VOLUSIA	32763-8316	(386) 734-6447	smeents@boulevardtire.com	
BOULEVARD TIRE CENTER	BRIDGESTONE/FIRESTONE	330 W GRANADA BLVD	ORMOND BEACH	VOLUSIA	32174-6274	(386) 672-2251	smeents@boulevardtire.com	
BOULEVARD TIRE CENTER	BRIDGESTONE/FIRESTONE	3680 S NOVA RD	PORT ORANGE	VOLUSIA	32129-4263	(386) 586-6088	smeents@boulevardtire.com	
BOULEVARD TIRE CENTER	BRIDGESTONE/FIRESTONE	3850 NW 30TH AVE	MIAMI	MIAMI-DADE	33142-5116	(305) 635-8116	smeents@boulevardtire.com	
BOULEVARD TIRE CENTER	BRIDGESTONE/FIRESTONE	418 S US HIGHWAY 441	LADY LAKE	LAKE	32159-4536	(352) 430-2380	smeents@boulevardtire.com	
BOULEVARD TIRE CENTER	BRIDGESTONE/FIRESTONE	4201 S STATE ROAD 7	DAVIE	BROWARD	33314-4017	(954) 792-7799	smeents@boulevardtire.com	
BOULEVARD TIRE CENTER	BRIDGESTONE/FIRESTONE	424 W 13TH ST	RIVIERA BEACH	PALM BEACH	33404-6832	(561) 842-4332	smeents@boulevardtire.com	
BOULEVARD TIRE CENTER	BRIDGESTONE/FIRESTONE	4702 CAPITAL CIR NW	TALLAHASSEE	LEON	32303-7217	(863) 578-8602	smeents@boulevardtire.com	
BOULEVARD TIRE CENTER	BRIDGESTONE/FIRESTONE	4741 LAREDO AVE	FORT MYERS	LEE	33905-4935	(863) 578-8602	smeents@boulevardtire.com	
BOULEVARD TIRE CENTER	BRIDGESTONE/FIRESTONE	4801 N HIGHWAY 19A	MOUNT DORA	LAKE	32757-2009	(352) 357-4040	smeents@boulevardtire.com	
BOULEVARD TIRE CENTER	BRIDGESTONE/FIRESTONE	510 S COMBEE RD	LAKELAND	POLK	33801-6310	(863) 682-5171	smeents@boulevardtire.com	
BOULEVARD TIRE CENTER	BRIDGESTONE/FIRESTONE	5178 DUNCAN RD	PUNTA GORDA	CHARLOTTE	33982-1728	(941) 639-7788	smeents@boulevardtire.com	
BOULEVARD TIRE CENTER	BRIDGESTONE/FIRESTONE	570 HENDERSON RD	JACKSONVILLE	DUVAL	32254-3515	(904) 786-8512	smeents@boulevardtire.com	
BOULEVARD TIRE CENTER	BRIDGESTONE/FIRESTONE	6310 E ADAMO DR	TAMPA	HILLSBOROUGH	33619-3410	(386) 734-6447	smeents@boulevardtire.com	
BOULEVARD TIRE CENTER	BRIDGESTONE/FIRESTONE	6815 E ADAMO DR	TAMPA	HILLSBOROUGH	33619-3419	(813) 621-5445	smeents@boulevardtire.com	
BOULEVARD TIRE CENTER	BRIDGESTONE/FIRESTONE	7051 ALICO RD	FT MYERS	LEE	33912-6004	(386) 734-6447	smeents@boulevardtire.com	
BOULEVARD TIRE CENTER	BRIDGESTONE/FIRESTONE	7500 COMMONWEALTH AVE	JACKSONVILLE	DUVAL	32220-2433	(386) 734-6447	smeents@boulevardtire.com	
BOULEVARD TIRE CENTER	BRIDGESTONE/FIRESTONE	816 S WOODLAND BLVD	DELAND	VOLUSIA	32720-6836	(386) 734-6447	smeents@boulevardtire.com	
BOULEVARD TIRE CENTER	BRIDGESTONE/FIRESTONE	8210 S ORANGE AVE	ORLANDO	ORANGE	32809-6733	(407) 240-1072	smeents@boulevardtire.com	
BOULEVARD TIRE CENTER	BRIDGESTONE/FIRESTONE	828 EDGEWOOD AVE N	JACKSONVILLE	DUVAL	32254-3084	(904) 388-5457	smeents@boulevardtire.com	
BOULEVARD TIRE CENTER	BRIDGESTONE/FIRESTONE	910 US HWY 27 SOUTH	LAKE HAMILTON	POLK	33851-0000	(863) 439-3608	smeents@boulevardtire.com	
DAVIS TIRE CENTER INC	BRIDGESTONE/FIRESTONE	5971 W BEAVER ST	JACKSONVILLE	DUVAL	32254-2806	(904) 329-4933	smeents@boulevardtire.com	Woman-owned
TLC 105 FT LAUDERDALE	BRIDGESTONE/FIRESTONE	2939 NW 27TH AVE BLDG 2901	POMPANO BEACH	BROWARD	33069-1010	(954) 977-8141	roley.thiele@tirehub.com	
ROADWAY TIRE AND PARTS INC	BRIDGESTONE/FIRESTONE	1301 SW 2ND ST	POMPANO BEACH	BROWARD	33069-3211	(954) 942-8122	roadway@ix.nercom.com	
ROAD MART INC	BRIDGESTONE/FIRESTONE	4716 HIGHWAY 90	MARIANNA	JACKSON	32446-7838	(850) 526-1950	roadmart100@yahoo.com	
RIKERS AUTOMOTIVE & TIRE II	BRIDGESTONE/FIRESTONE	5700 CENTRAL FL PKY	ORLANDO	ORANGE	32821-8638	(407) 238-9800	RIKERSAUTO@RIKERSAUTO.COM	
BARNETT TIRE SERVICE	BRIDGESTONE/FIRESTONE	605 NORTH BLVD W	LEESBURG	LAKE	34748-5048	(352) 787-5453	Rbarnett1978@gmail.com	Small Business(<100 employees)
CALLAGHAN TIRE	BRIDGESTONE/FIRESTONE	1511 38TH AVE E	BRADENTON	MANATEE	34208-4651	(941) 746-6188	pricciardo@callaghantire.com	
AMERICAN TIRE DISTRIBUTORS	BRIDGESTONE/FIRESTONE	601 103RD AVE N	ROYAL PALM BEACH	PALM BEACH	33411-4342	(561) 402-8307	pnino@atd-us.com	
AMERICAN TIRE DISTRIBUTORS INC	BRIDGESTONE/FIRESTONE	206 STUMPFIELD RD	PENSACOLA	ESCAMBIA	32503-7452	(850) 478-3714	PensacolaReceiving@atd-us.com	
MILLER BROS GIANT TIRE SRVC	BRIDGESTONE/FIRESTONE	14811 N 12TH ST	LUTZ	HILLSBOROUGH	33549-3508	(813) 975-8400	PAYABLE@MBGTS.NET	
MILLER BROS GIANT TIRE SRVC	BRIDGESTONE/FIRESTONE	925 W LANCASTER RD	ORLANDO	ORANGE	32809-5882	(407) 855-9621	PAYABLE@MBGTS.NET	
GEORGES WHOLESALE TIRE	BRIDGESTONE/FIRESTONE	3260 N LECANTO HWY	BEVERLY HILLS	CITRUS	34465-3500	(352) 527-1712	OFFICE@GEORGESWHOLESALE.NET	

Manufacturer Authorized Sales & Service Center Name	Tire Brands	Street Address	City	County	Zip Code	Telephone #	E-Mail To Accept Purchase Orders	MWBE Status (if available) Y = MWBE
CALLAGHAN TIRE	BRIDGESTONE/FIRESTONE	211 SW 33RD AVE	OCALA	MARION	34474-1926	(352) 873-9005	ocala@callaghantire.com	
NEECE TIRE & AUTO SERVICE INC	BRIDGESTONE/FIRESTONE	4792 BLOUNTSTOWN HWY	TALLAHASSEE	LEON	32304-2772	(850) 574-4100	neecetire@msn.com	
CALLAGHAN TIRE	BRIDGESTONE/FIRESTONE	5791 TAYLOR RD	NAPLES	COLLIER	34109-2306	(239) 592-0003	Naples@callaghantire.com	
MILLER 40 CAR CARE & TIRE SERVICE	BRIDGESTONE/FIRESTONE	6795 SW 40TH ST	MIAMI	MIAMI-DADE	33155-3705	(786) 801-0245	miller40carcare@outlook.com	Hispanic American
TLC 104 JACKSONVILLE	BRIDGESTONE/FIRESTONE	4101 BULLS BAY HWY	JACKSONVILLE	DUVAL	32219-3233	(904) 693-8576	mike.beaver@tirehub.com	
MOHRS AUTOMOTIVE	BRIDGESTONE/FIRESTONE	5438 US HIGHWAY 98 W	SANTA ROSA BEACH	WALTON	32459-3558	(850) 267-2750	michael@mohrsauto.com	
AMERICAN TIRE DISTRIBUTORS INC	BRIDGESTONE/FIRESTONE	11700 MIRAMAR PKWY	MIRAMAR	BROWARD	33025-5826	(954) 874-9410	MiamiReceiving@atd-us.com	
MILLER BROS GIANT TIRE SRVC	BRIDGESTONE/FIRESTONE	4971 SW 34TH PL	DAVIE	BROWARD	33314-2121	(954) 321-1755	mia.dispatcher@mbgts.net	
LAKE TIRE	BRIDGESTONE/FIRESTONE	812 W BURLEIGH BLVD	TAVARES	LAKE	32778-2302	(352) 343-0041	Lktire@comcast.net	
CALLAGHAN TIRE	BRIDGESTONE/FIRESTONE	3035 E MAIN ST	LAKELAND	POLK	33801-9409	(863) 665-9336	lakeland@callaghantire.com	
PARKER TIRE	BRIDGESTONE/FIRESTONE	3000 NW PINE AVE	OCALA	MARION	34475-2610	(352) 732-0786	kevin@parkerstire.com	
EASY PAY TIRE	BRIDGESTONE/FIRESTONE	619 N FEDERAL HWY	BOYNTON BEACH	PALM BEACH	33435-4124	(561) 732-2696	jon@easypaytire.com	
TIRESOLES OF BROWARD INC	BRIDGESTONE/FIRESTONE	7800 NW 103RD ST	HIALEAH GARDENS	MIAMI-DADE	33016-2418	(305) 821-2121	jmolina@tiresoles.com	
ST LUCIE BATTERY & TIRE	BRIDGESTONE/FIRESTONE	5500 ORANGE AVE	FT PIERCE	ST. LUCIE	34947-1309	(772) 461-1746	Jlewis@slbt.com	
BOCA TIRE AND AUTO SERVICE CENTER I	BRIDGESTONE/FIRESTONE	5300 W HILLSBORO BLVD STE 203	COCONUT CREEK	BROWARD	33073-4395	(954) 573-7117	jay@onthemovegas.com	
ACE TIRE	BRIDGESTONE/FIRESTONE	5975 NW 82ND AVE	MIAMI	MIAMI-DADE	33166-3418	(305) 592-1995	isabel@acetiremiami.com	
S O S MOBILE TIRE CORP	BRIDGESTONE/FIRESTONE	5900 SW 42ND PLACE STE 8	FT LAUDERDALE	BROWARD	33314-3630	(954) 638-6787	info@sosmobiletire.com	
HAMILLS TIRE	BRIDGESTONE/FIRESTONE	2425 N ANDREWS AVE	FORT LAUDERDALE	BROWARD	33311-3916	(954) 564-6361	info@hamilltire.com	
GLENNS TIRE	BRIDGESTONE/FIRESTONE	2726 S HARBOR CITY BLVD	MELBOURNE	BREVARD	32901-7210	(407) 723-0751	info@glennstire.com	
FUZZYS TIRE CENTER INC	BRIDGESTONE/FIRESTONE	800 N STATE ROAD 7	PLANTATION	BROWARD	33317-1513	(954) 792-1370	FUZZYSTIRE@GMAIL.COM	Woman-owned
AMERICAN TIRE DISTRIBUTORS INC	BRIDGESTONE/FIRESTONE	3971 VERONICA S SHOEMAKER BLVD	FORT MYERS	LEE	33916-2209	(239) 337-5555	FtMyersReceiving@atd-us.com	
CALLAGHAN TIRE	BRIDGESTONE/FIRESTONE	2203 ALICIA ST	FORT MYERS	LEE	33901-4058	(239) 334-0105	ftmyers@callaghantire.com	
CERTIFIED TIRE OF PORT CHARLOTTE IN	BRIDGESTONE/FIRESTONE	87 N TAMIAMI TRAIL	PORT CHARLOTTE	CHARLOTTE	33953-4505	(941) 255-9299	firestoneportcharlotte@yahoo.com	
FIRESTONE SERVICE CENTER	BRIDGESTONE/FIRESTONE	618 US HIGHWAY 90 E	DEFUNIAK SPRINGS	WALTON	32433-1915	(850) 892-2147	firestonedfs@gmail.com	
TIRESOLES OF BROWARD INC	BRIDGESTONE/FIRESTONE	402 RINKER WAY	LAKE WORTH	PALM BEACH	33461-3817	(561) 588-2777	f7650@tob.fdn.com	
EXTREME TIRES	BRIDGESTONE/FIRESTONE	7112 W OAKLAND PARK BLVD STE G1	SUNRISE	BROWARD	33351-0000	(954) 773-1896	extremetire2010@gmail.ci	
DUMAS TIRES INC	BRIDGESTONE/FIRESTONE	17324 NORTH US HIGHWAY 41	LUTZ	HILLSBOROUGH	33549-4569	(813) 949-8095	DUMASTIRES01@YAHOO.COM	
3D TIRE COMPANY INC	BRIDGESTONE/FIRESTONE	538 W KENNEDY BLVD	ORLANDO	ORANGE	32810-6239	(407) 875-3399	dexter@3dtirecompany.com	African American
ST LUCIE BATTERY & TIRE	BRIDGESTONE/FIRESTONE	198 US HWY 98 N	OKEECHOBEE	OKEECHOBEE	34972-2741	(863) 352-2431	cjboone@slbt.com	
CITY TIRE SERVICE	BRIDGESTONE/FIRESTONE	1740 E MAIN STREET	LEESBURG	LAKE	34748-7096	(352) 787-1155	CITYTIRELEESBURG@EMBARQMAIL.COM	Woman-owned
MILLER BROS GIANT TIRE SRVC	BRIDGESTONE/FIRESTONE	10340 CAMP MINE RD	BROOKSVILLE	HERNANDO	34601-8605	(352) 797-9205	christina.faudel@mbgts.net	Woman-owned
MILLER BROS GIANT TIRE SRVC	BRIDGESTONE/FIRESTONE	14341 ALICO RD	FORT MYERS	LEE	33913-8231	(954) 680-5770	christina.faudel@mbgts.net	
ST LUCIE BATTERY & TIRE	BRIDGESTONE/FIRESTONE	11050 SE FEDERAL HWY	HOBE SOUND	MARTIN	33455-5126	(772) 546-0999	ccopus@slbt.com	
CANERO TIRE CORP	BRIDGESTONE/FIRESTONE	3595 NW 32ND AVE	MIAMI	MIAMI-DADE	33142-5732	(305) 633-1169	CANEROTIRECORP@BELLSOUTH.NET	Hispanic American
ST LUCIE BATTERY & TIRE	BRIDGESTONE/FIRESTONE	10672 US-1	PORT ST LUCIE	ST. LUCIE	34952-6403	(772) 461-1746	bwilliams@slbt.com	
SOUTHERN TIRE MART	BRIDGESTONE/FIRESTONE	7800 PITTMAN AVE	PENSACOLA	ESCAMBIA	32534-4495	(850) 477-3330	Brian.Lineberger@stmtires.com	
PALM TIRE & AUTOMOTIVE	BRIDGESTONE/FIRESTONE	204 N HWY 27	MINNEOLA	LAKE	34715-9223	(352) 394-3280	brendon@palmtireauto.com	
TLC 206 FORT MYERS	BRIDGESTONE/FIRESTONE	9365 LAREDO AVE STE 170	FT MYERS	LEE	33905-4630	(518) 931-9063	bobby.armstrong@tirehub.com	
ST LUCIE BATTERY & TIRE	BRIDGESTONE/FIRESTONE	317 ORANGE AVE	FT PIERCE	ST. LUCIE	34950-4338	(772) 489-3977	bfulford@slbt.com	
BEST CHOICE TIRES AND SERVICE	BRIDGESTONE/FIRESTONE	3757 S NOVA RD	PORT ORANGE	VOLUSIA	32129-4233	(386) 756-9007	bestchoicetire@yahoo.com	
THE TIRESOLES GROUP	BRIDGESTONE/FIRESTONE	1865 S POWERLINE RD	DEERFIELD BEACH	BROWARD	33442-8193	(954) 354-8489	bcornman@tiresoles.com	
AMERICAN TIRE DISTRIBUTORS INC	BRIDGESTONE/FIRESTONE	4410 EAGLE FALLS PL	TAMPA	HILLSBOROUGH	33619-9620	(813) 623-2004	bchandler@atd-us.com	
ASIA 2031 2 CORP	BRIDGESTONE/FIRESTONE	12520 SW 8TH ST	MIAMI	MIAMI-DADE	33184-1412	(305) 220-9004	asia2031firestone@gmail.com	
CALLAGHAN TIRE	BRIDGESTONE/FIRESTONE	4421 12TH STREET CT EAST	BRADENTON	MANATEE	34203-3611	(941) 751-1577	AP@callaghantire.com	
A OK TIRE MART	BRIDGESTONE/FIRESTONE	1215 S FRENCH AVE	SANFORD	SEMINOLE	32771-3367	(407) 330-3588	AOKTIRE@BELLSOUTH.NET	
B & L TIRES	BRIDGESTONE/FIRESTONE	3401 US HWY 98 S	LAKELAND	POLK	33803-7376	(863) 665-1617	ANTOINETTEBLTIRES@GMAIL.COM	Small Business(<100 employees)
BALADO NATIONAL TIRES INC	BRIDGESTONE/FIRESTONE	1633 NW 27TH AVE	MIAMI	MIAMI-DADE	33125-2139	(305) 635-9001	Alyssa@balado.com	Hispanic American
CITY TIRE COMPANY	BRIDGESTONE/FIRESTONE	19511 STATE ROAD 20 W	BLOUNTSTOWN	CALHOUN	32424-3915	(850) 674-8784	allencitytire@fairpoint.net	
SOUTHERN TIRE MART	BRIDGESTONE/FIRESTONE	4500 HOME RUN BLVD STE 300	DAVENPORT	POLK	33837-6408	(800) 678-8473	alex.budd@stmtires.com	
ALERT TIRE SERVICE	BRIDGESTONE/FIRESTONE	1505 E BAKER ST	PLANT CITY	HILLSBOROUGH	33563-5805	(813) 754-3554	alert.tire.us.fl@alerttire.com	
A EXPERT TIRE & SERVICE INC	BRIDGESTONE/FIRESTONE	8794 ALICO RD	FT MYERS	LEE	33912-5117	(239) 590-0300	AEXPERTTIRE@YAHOO.COM	
ADVENTURE TIRES 3	BRIDGESTONE/FIRESTONE	7930 NW 36 ST STE 13-16	DORAL	MIAMI-DADE	33166-6666	(305) 470-9775	adventuretiresdoral@gmail.com	Hispanic American
ADVANCED TIRE SERVICE LLC	BRIDGESTONE/FIRESTONE	2418 E SILVER SPRINGS BLVD	OCALA	MARION	34470-8254	(352) 236-8825	ADVANCEDTIRESERVICE@GMAIL.COM	
CALLAGHAN TIRE	BRIDGESTONE/FIRESTONE	11940 44TH ST N	CLEARWATER	PINELLAS	33762-5105	(727) 571-3358	adominguez@callaghantire.com	
CALLAGHAN TIRE	BRIDGESTONE/FIRESTONE	3600 NW 54TH ST	MIAMI	MIAMI-DADE	33142-3213	(305) 634-7665	adominguez@callaghantire.com	
CALLAGHAN TIRE	BRIDGESTONE/FIRESTONE	3615 15TH ST E	BRADENTON	MANATEE	34208-4617	(941) 747-6189	adominguez@callaghantire.com	
CALLAGHAN TIRE	BRIDGESTONE/FIRESTONE	1301 44TH AVE E	BRADENTON	MANATEE	34203-3631	(941) 751-1577	adominguez@callaghantire.com	
CALLAGHAN TIRE	BRIDGESTONE/FIRESTONE	891 W 13TH ST	RIVIERA BEACH	PALM BEACH	33404-6709	(561) 845-2875	adominguez@callaghantire.com	
A1 AUTO CARE INC	BRIDGESTONE/FIRESTONE	9611 SE GLEASON ST	HOBE SOUND	MARTIN	33455-3505	(772) 546-6667	a1autocareinc1986@gmail.com	
FIRESTONE COMPLETE AUTO CARE	BRIDGESTONE/FIRESTONE	2220 NE CAPITAL CIR	TALLAHASSEE	LEON	32308-4306	(850) 202-9755	952759@BFUSA.COM	
FIRESTONE COMPLETE AUTO CARE	BRIDGESTONE/FIRESTONE	2215 SW 122ND AVE	MIAMI	MIAMI-DADE	33175-7344	(786) 530-2427	943867@BFUSA.COM	
FIRESTONE COMPLETE AUTO CARE	BRIDGESTONE/FIRESTONE	30 BAHIA AVE LN	OCALA	MARION	34472-2603	(352) 820-3918	936747@BFUSA.COM	
TIRES PLUS	BRIDGESTONE/FIRESTONE	45670 US HWY 27	DAVENPORT	POLK	33897-4548	(863) 758-4122	933853@BFUSA.COM	
FIRESTONE COMPLETE AUTO CARE	BRIDGESTONE/FIRESTONE	2849 MYERS RD	KISSIMMEE	OSCEOLA	34743-0000	(689) 302-2056	932476@BFUSA.COM	
TIRES PLUS	BRIDGESTONE/FIRESTONE	2838 GULF TO BAY BLVD	CLEARWATER	PINELLAS	33759-4000	(727) 796-2322	926306@BFUSA.COM	
FIRESTONE COMPLETE AUTO CARE	BRIDGESTONE/FIRESTONE	1255 SUN MARKET PL	NORTH PORT	SARASOTA	34288-1950	(941) 336-6157	912085@BFUSA.COM	
FIRESTONE COMPLETE AUTO CARE	BRIDGESTONE/FIRESTONE	14170 W COLONIAL DR	WINTER GARDEN	ORANGE	34787-4205	(321) 286-0433	912084@bfusa.com	
FIRESTONE COMPLETE AUTO CARE	BRIDGESTONE/FIRESTONE	2420 STATE ROAD 44	NEW SMYRNA BEACH	VOLUSIA	32168-8280	(386) 267-5987	908076@BFUSA.COM	
FIRESTONE COMPLETE AUTO CARE	BRIDGESTONE/FIRESTONE	5435 45TH ST E	BRADENTON	MANATEE	34203-5522	(941) 357-7074	907041@BFUSA.COM	
FIRESTONE COMPLETE AUTO CARE	BRIDGESTONE/FIRESTONE	11290 SR 82	FORT MYERS	LEE	33905-0000	(239) 215-4955	907036@BFUSA.COM	

Manufacturer Authorized Sales & Service Center Name	Tire Brands	Street Address	City	County	Zip Code	Telephone #	E-Mail To Accept Purchase Orders	MWBE Status (if available) Y = MWBE
FIRESTONE COMPLETE AUTO CARE	BRIDGESTONE/FIRESTONE	8870 NAVARRE PKWY	NAVARRE	SANTA ROSA	32566-2159	(850) 400-3738	906977@BFUSA.COM	
FIRESTONE COMPLETE AUTO CARE	BRIDGESTONE/FIRESTONE	8895 LANTANA RD	LAKE WORTH	PALM BEACH	33467-6264	(561) 600-4866	906372@BFUSA.COM	
FIRESTONE COMPLETE AUTO CARE	BRIDGESTONE/FIRESTONE	19560 COCHRAN BLVD	PORT CHARLOTTE	CHARLOTTE	33948-2066	(941) 315-9702	906087@BFUSA.COM	
FIRESTONE COMPLETE AUTO CARE	BRIDGESTONE/FIRESTONE	4070 PINE RIDGE RD	NAPLES	COLLIER	34119-4008	(239) 306-5113	904596@BFUSA.COM	
FIRESTONE COMPLETE AUTO CARE	BRIDGESTONE/FIRESTONE	5020 HIGHWAY 90	PACE	SANTA ROSA	32571-1504	(850) 994-4209	902559@BFUSA.COM	
FIRESTONE COMPLETE AUTO CARE	BRIDGESTONE/FIRESTONE	905 DEL PRADO BLVD N	CAPE CORAL	LEE	33909-2306	(239) 936-0024	799861@BFUSA.COM	
FIRESTONE COMPLETE AUTO CARE	BRIDGESTONE/FIRESTONE	24020 BEATRIX BLVD	PORT CHARLOTTE	CHARLOTTE	33954-3869	(941) 235-0445	798998@BFUSA.COM	
FIRESTONE COMPLETE AUTO CARE	BRIDGESTONE/FIRESTONE	4833 COMMERCIAL WAY	SPRING HILL	HERNANDO	34606-1915	(352) 596-0277	798580@BFUSA.COM	
TIRES PLUS	BRIDGESTONE/FIRESTONE	7567 SW STATE ROAD 200	OCALA	MARION	34476-7051	(352) 351-0202	797098@BFUSA.COM	
FIRESTONE COMPLETE AUTO CARE	BRIDGESTONE/FIRESTONE	11966 NARCOOSSEE RD	ORLANDO	ORANGE	32832-6900	(407) 851-1945	795074@BFUSA.COM	
FIRESTONE COMPLETE AUTO CARE	BRIDGESTONE/FIRESTONE	12400 CORTEZ BLVD	BROOKSVILLE	HERNANDO	34613-2628	(352) 597-6994	794378@BFUSA.COM	
FIRESTONE COMPLETE AUTO CARE	BRIDGESTONE/FIRESTONE	25170 MAREN WAY	LAND O LAKES	PASCO	34639-6400	(813) 909-1492	790964@BFUSA.COM	
TIRES PLUS	BRIDGESTONE/FIRESTONE	605 NW 8TH AVE	GAINESVILLE	ALACHUA	32601-5074	(352) 505-4664	787742@TIRESPLUS.COM	
FIRESTONE COMPLETE AUTO CARE	BRIDGESTONE/FIRESTONE	2355 SW COLLEGE RD	OCALA	MARION	34471-1613	(352) 433-0973	787741@BFUSA.COM	
TIRES PLUS	BRIDGESTONE/FIRESTONE	7030 SW ARCHER RD	GAINESVILLE	ALACHUA	32608-4723	(352) 505-1261	787740@BFUSA.COM	
FIRESTONE COMPLETE AUTO CARE	BRIDGESTONE/FIRESTONE	4628 TROPEA WAY	JACKSONVILLE	DUVAL	32246-8586	(904) 642-9148	786365@BFUSA.COM	
FIRESTONE COMPLETE AUTO CARE	BRIDGESTONE/FIRESTONE	37 E NINE MILE RD	PENSACOLA	ESCAMBIA	32534-3136	(850) 477-0835	781999@BFUSA.COM	
FIRESTONE COMPLETE AUTO CARE	BRIDGESTONE/FIRESTONE	5130 N WICKHAM RD	MELBOURNE	BREVARD	32940-7124	(321) 254-7623	781579bfrc.com	
FIRESTONE COMPLETE AUTO CARE	BRIDGESTONE/FIRESTONE	16747 CAGAN PARK AVE	CLERMONT	LAKE	34714-6574	(352) 243-2011	781578@BFUSA.COM	
TIRES PLUS	BRIDGESTONE/FIRESTONE	5812 DEREK AVE	SARASOTA	SARASOTA	34238-3054	(941) 341-9584	781219@BFUSA.COM	
FIRESTONE COMPLETE AUTO CARE	BRIDGESTONE/FIRESTONE	4210 E COUNTY RD 466	OXFORD	SUMTER	34484-3544	(352) 748-1740	778038@bfrc.com	
TIRES PLUS	BRIDGESTONE/FIRESTONE	12575 BARTRAM PARK BLVD	JACKSONVILLE	DUVAL	32258-5565	(904) 292-9191	772996@tiresplus.com	
TIRES PLUS STORE	BRIDGESTONE/FIRESTONE	14508 E COLONIAL DR	ORLANDO	ORANGE	32826-5121	(407) 505-6414	772189@tiresplus.com	
FIRESTONE COMPLETE AUTO CARE	BRIDGESTONE/FIRESTONE	2502 SKYLINE BLVD	CAPE CORAL	LEE	33914-7712	(239) 242-0691	755787@bfrc.com	
TIRES PLUS 5074 CLERMONT	BRIDGESTONE/FIRESTONE	2625 E HWY 50	CLERMONT	LAKE	34711-6050	(407) 654-6064	755609@tiresplus.com	
TIRES PLUS 5114 POMPANO BCH US1	BRIDGESTONE/FIRESTONE	1100 S FEDERAL HWY	POMPANO BEACH	BROWARD	33062-7053	(954) 781-1961	755070@tiresplus.com	
FIRESTONE COMPLETE AUTO CARE	BRIDGESTONE/FIRESTONE	5437 S WILLIAMSON BLVD	PORT ORANGE	VOLUSIA	32128-7399	(386) 767-9338	749345@bfrc.com	
TIRES PLUS 5088	BRIDGESTONE/FIRESTONE	5703 MANATEE AVE W	BRADENTON	MANATEE	34209-2540	(941) 792-7603	744004@tiresplus.com	
TIRES PLUS TOTAL CAR CARE 5077	BRIDGESTONE/FIRESTONE	4650 US HIGHWAY 98 N	LAKELAND	POLK	33809-3603	(863) 853-9609	691798@bfrc.com	
TIRES PLUS TOTAL CAR CARE 5078	BRIDGESTONE/FIRESTONE	4801 S KIRKMAN RD	ORLANDO	ORANGE	32811-3640	(407) 294-9142	691739@bfrc.com	
TIRES PLUS TOTAL CAR CARE 6017	BRIDGESTONE/FIRESTONE	1376 SW SAINT LUCIE WEST BLVD	PORT SAINT LUCIE	ST. LUCIE	34986-2109	(772) 785-6205	676969@bfrc.com	
TIRES PLUS TOTAL CAR CARE 6015	BRIDGESTONE/FIRESTONE	10510 WILES RD	CORAL SPRINGS	BROWARD	33076-2006	(954) 345-1596	676918@bfrc.com	African American
TIRES PLUS TOTAL CAR CARE 6014	BRIDGESTONE/FIRESTONE	250 W MERRITT ISLAND CSWY	MERRITT ISLAND	BREVARD	32952-4806	(321) 456-5946	676888@bfrc.com	
TIRES PLUS	BRIDGESTONE/FIRESTONE	1445 W NEW HAVEN AVE	WEST MELBOURNE	BREVARD	32904-3922	(321) 725-1055	676454@bfrc.com	
TIRES PLUS TOTAL CAR CARE 6048	BRIDGESTONE/FIRESTONE	9559 BAYMEADOWS RD	JACKSONVILLE	DUVAL	32256-7903	(904) 737-0401	676209@bfrc.com	
TIRES PLUS TOTAL CAR CARE 6011	BRIDGESTONE/FIRESTONE	5710 NW 183RD ST	HIALEAH	MIAMI-DADE	33015-6021	(305) 824-5511	663921@bfrc.com	
TIRES PLUS TOTAL CAR CARE 5027	BRIDGESTONE/FIRESTONE	4900 TAMIAMI TRL N	NAPLES	COLLIER	34103-3009	(239) 261-5455	639265@bfrc.com	
TIRES PLUS TOTAL CAR CARE 5031	BRIDGESTONE/FIRESTONE	2000 S BAY ST	EUSTIS	LAKE	32726-6355	(352) 357-7645	635871@bfrc.com	
TIRES PLUS TOTAL CAR CARE 6079	BRIDGESTONE/FIRESTONE	1340 N STATE ROAD 7	MARGATE	BROWARD	33063-2843	(954) 971-3790	630055@bfrc.com	
TIRES PLUS TOTAL CAR CARE 6044	BRIDGESTONE/FIRESTONE	3820 BIRD RD	CORAL GABLES	MIAMI-DADE	33146-1511	(305) 444-9888	630047@bfrc.com	
TIRES PLUS TOTAL CAR CARE 6042	BRIDGESTONE/FIRESTONE	855 SW 79TH AVE	MIAMI	MIAMI-DADE	33144-4203	(305) 269-3400	630039@bfrc.com	
TIRES PLUS TOTAL CAR CARE 5099	BRIDGESTONE/FIRESTONE	3100 GARDEN ST	TITUSVILLE	BREVARD	32796-3060	(321) 267-2118	630004@bfrc.com	
TIRES PLUS TOTAL CAR CARE 6043	BRIDGESTONE/FIRESTONE	4262 SOUTHSIDE BLVD	JACKSONVILLE	DUVAL	32216-5400	(904) 645-0733	629944@bfrc.com	
TIRES PLUS	BRIDGESTONE/FIRESTONE	23245 STATE ROAD 7	BOCA RATON	PALM BEACH	33428-5464	(561) 883-0307	610208@bfrc.com	
TIRES PLUS TOTAL CAR CARE 5075	BRIDGESTONE/FIRESTONE	1877 N MILITARY TRL	WEST PALM BEACH	PALM BEACH	33409-4715	(561) 688-0595	605395@bfrc.com	
FIRESTONE COMPLETE AUTO CARE	BRIDGESTONE/FIRESTONE	8706 CITRUS PARK DR	TAMPA	HILLSBOROUGH	33625-3013	(813) 792-8678	599735@bfrc.com	
FIRESTONE COMPLETE AUTO CARE	BRIDGESTONE/FIRESTONE	5495 AIRPORT PULLING RD N	NAPLES	COLLIER	34109-2057	(239) 598-1590	599565@bfrc.com	
TIRES PLUS TOTAL CAR CARE 5066	BRIDGESTONE/FIRESTONE	8411 HANLEY RD	TAMPA	HILLSBOROUGH	33634-1402	(813) 889-8473	597899@bfrc.com	
FIRESTONE COMPLETE AUTO CARE	BRIDGESTONE/FIRESTONE	1600 TAMIAMI TRL S	VENICE	SARASOTA	34293-1633	(941) 408-8861	592196@bfrc.com	
TIRES PLUS TOTAL CAR CARE 5069	BRIDGESTONE/FIRESTONE	80 NW SPANISH RIVER BLVD	BOCA RATON	PALM BEACH	33431-4214	(561) 392-8400	551007@bfrc.com	
TIRES PLUS TOTAL CAR CARE 5071	BRIDGESTONE/FIRESTONE	1917 W TENNESSEE ST	TALLAHASSEE	LEON	32304-3226	(850) 224-6152	550744@bfrc.com	
TIRES PLUS TOTAL CAR CARE 5072	BRIDGESTONE/FIRESTONE	1883 CAPITAL CIR NE	TALLAHASSEE	LEON	32308-4598	(850) 942-7400	550728@bfrc.com	
TIRES PLUS TOTAL CAR CARE 5073	BRIDGESTONE/FIRESTONE	2800 APALACHEE PKWY	TALLAHASSEE	LEON	32301-3608	(850) 877-4091	550655@bfrc.com	
TIRES PLUS TOTAL CAR CARE 5026	BRIDGESTONE/FIRESTONE	2610 COUNTRYSIDE BLVD	CLEARWATER	PINELLAS	33761-3601	(727) 796-1028	548634@bfrc.com	
TIRES PLUS TOTAL CAR CARE 6058	BRIDGESTONE/FIRESTONE	2409 E SEMORAN BLVD	APOPKA	ORANGE	32703-5806	(407) 880-9688	547018@bfrc.com	
TIRES PLUS	BRIDGESTONE/FIRESTONE	135 N HIGHWAY A1A ALT	JUPITER	PALM BEACH	33477-5013	(561) 746-6292	544566@bfrc.com	
TIRES PLUS TOTAL CAR CARE 5067	BRIDGESTONE/FIRESTONE	5032 NW 39TH AVE	GAINESVILLE	ALACHUA	32606-5944	(352) 376-8577	544558@bfrc.com	
TIRES PLUS	BRIDGESTONE/FIRESTONE	410 E EAU GALLIE BLVD	INDIAN HARBOUR BCH	BREVARD	32937-4881	(321) 773-5336	542385@bfrc.com	
TIRES PLUS	BRIDGESTONE/FIRESTONE	14411 BISCAYNE BLVD	N MIAMI BEACH	MIAMI-DADE	33181-1207	(305) 944-5605	533521@bfrc.com	
TIRES PLUS	BRIDGESTONE/FIRESTONE	900 9TH AVE N	ST PETERSBURG	PINELLAS	33705-1201	(727) 822-4041	533475@bfrc.com	
TIRES PLUS TOTAL CAR CARE 5096	BRIDGESTONE/FIRESTONE	4970 S FLORIDA AVE	LAKELAND	POLK	33813-2129	(863) 619-6117	533432@bfrc.com	
TIRES PLUS TOTAL CAR CARE 6007	BRIDGESTONE/FIRESTONE	5996 CYPRESS GARDENS BLVD	WINTER HAVEN	POLK	33884-2268	(863) 324-6390	533416@bfrc.com	
TIRES PLUS	BRIDGESTONE/FIRESTONE	36003 E LAKE RD S	PALM HARBOR	PINELLAS	34685-3199	(727) 787-8728	533394@bfrc.com	
TIRES PLUS TOTAL CAR CARE 5064	BRIDGESTONE/FIRESTONE	1380 HYPOLUXO RD	LANTANA	PALM BEACH	33462-4226	(561) 585-8388	520780@bfrc.com	
TIRES PLUS TOTAL CAR CARE 5059	BRIDGESTONE/FIRESTONE	2615 ENTERPRISE RD	ORANGE CITY	VOLUSIA	32763-8220	(386) 774-5777	520772@bfrc.com	
TIRES PLUS TOTAL CAR CARE 5065	BRIDGESTONE/FIRESTONE	3910 SW COLLEGE RD	OCALA	MARION	34474-5748	(352) 237-0121	520764@bfrc.com	
TIRES PLUS TOTAL CAR CARE 5056	BRIDGESTONE/FIRESTONE	5136 E FOWLER AVE	TAMPA	HILLSBOROUGH	33617-2145	(813) 985-9996	520756@bfrc.com	
TIRES PLUS TOTAL CAR CARE 5093	BRIDGESTONE/FIRESTONE	1100 ALAFAYA TRL	OVIEDO	SEMINOLE	32765-4707	(407) 365-0888	494496@bfrc.com	
TIRES PLUS TOTAL CAR CARE 5095	BRIDGESTONE/FIRESTONE	8205 NW 12TH ST	MIAMI	MIAMI-DADE	33126-1837	(305) 599-8082	464759@bfrc.com	
TIRES PLUS TOTAL CAR CARE 5017	BRIDGESTONE/FIRESTONE	3612 TAMIAMI TRL E	NAPLES	COLLIER	34112-6221	(239) 774-7919	464465@bfrc.com	

Manufacturer Authorized Sales & Service Center Name	Tire Brands	Street Address	City	County	Zip Code	Telephone #	E-Mail To Accept Purchase Orders	MWBE Status (if available) Y = MWBE
TIRES PLUS TOTAL CAR CARE 5018	BRIDGESTONE/FIRESTONE	11800 SEMINOLE BLVD	LARGO	PINELLAS	33778-2801	(727) 586-3432	464457@bfrc.com	
TIRES PLUS TOTAL CAR CARE 5061	BRIDGESTONE/FIRESTONE	15460 S TAMIAMI TRL	FORT MYERS	LEE	33908-4225	(239) 489-3301	458805@bfrc.com	
TIRES PLUS TOTAL CAR CARE 5062	BRIDGESTONE/FIRESTONE	4221 KINGS HWY	PORT CHARLOTTE	CHARLOTTE	33980-8415	(941) 629-7143	458783@bfrc.com	
TIRES PLUS TOTAL CAR CARE 5058	BRIDGESTONE/FIRESTONE	3626 S DALE MABRY HWY	TAMPA	HILLSBOROUGH	33629-8609	(813) 832-6600	458007@bfrc.com	
TIRES PLUS	BRIDGESTONE/FIRESTONE	9870 PINES BLVD	PEMBROKE PINES	BROWARD	33024-6141	(954) 435-9602	453633@bfrc.com	
TIRES PLUS TOTAL CAR CARE 6041	BRIDGESTONE/FIRESTONE	5002 PALM COAST PKWY NW	PALM COAST	FLAGLER	32137-8792	(386) 445-5967	453544@bfrc.com	
TIRES PLUS TOTAL CAR CARE 5053	BRIDGESTONE/FIRESTONE	5375 RED BUG LAKE RD	WINTER SPRINGS	SEMINOLE	32708-4970	(407) 695-9400	442623@bfrc.com	
TIRES PLUS TOTAL CAR CARE 5036	BRIDGESTONE/FIRESTONE	16125 N DALE MABRY HWY	TAMPA	HILLSBOROUGH	33618-1340	(813) 960-7997	442615@bfrc.com	
TIRES PLUS TOTAL CAR CARE 5052	BRIDGESTONE/FIRESTONE	12053 COLLEGIATE WAY	ORLANDO	ORANGE	32817-2158	(407) 282-8281	442607@bfrc.com	
TIRES PLUS TOTAL CAR CARE 5051	BRIDGESTONE/FIRESTONE	860 S SUN DR	LAKE MARY	SEMINOLE	32746-2406	(407) 333-3429	442585@bfrc.com	
TIRES PLUS TOTAL CAR CARE 5035	BRIDGESTONE/FIRESTONE	2930 10TH AVE N	LAKE WORTH	PALM BEACH	33461-3006	(561) 965-8202	427160@bfrc.com	
TIRES PLUS	BRIDGESTONE/FIRESTONE	7109 STATE ROAD 52	BAYONET POINT	PASCO	34667-6708	(727) 863-5493	427152@bfrc.com	
TIRES PLUS TOTAL CAR CARE 5020	BRIDGESTONE/FIRESTONE	3732 US HIGHWAY 19	NEW PORT RICHEY	PASCO	34652-6150	(727) 848-0511	427144@bfrc.com	
DON OLSON TIRE 5022	BRIDGESTONE/FIRESTONE	3543 TAMIAMI TRL	PORT CHARLOTTE	CHARLOTTE	33952-8128	(941) 629-7561	423343@bfrc.com	
TIRES PLUS TOTAL CAR CARE 5050	BRIDGESTONE/FIRESTONE	2310 DEL PRADO BLVD S	CAPE CORAL	LEE	33990-6633	(239) 772-4997	412864@bfrc.com	
TIRES PLUS TOTAL CAR CARE 5019	BRIDGESTONE/FIRESTONE	9050 BONITA BEACH RD SE	BONITA SPRINGS	LEE	34135-4237	(239) 495-7995	385395@bfrc.com	
TIRES PLUS	BRIDGESTONE/FIRESTONE	1376 LORI DR STE A	SPRING HILL	HERNANDO	34606-4573	(352) 686-0442	380814@bfrc.com	
FIRESTONE COMPLETE AUTO CARE	BRIDGESTONE/FIRESTONE	57 SAN MARCO AVE	SAINT AUGUSTINE	ST. JOHNS	32084-3276	(904) 826-4445	359450@bfrc.com	
FIRESTONE COMPLETE AUTO CARE	BRIDGESTONE/FIRESTONE	7727 UNIVERSITY BLVD	WINTER PARK	ORANGE	32792-8812	(407) 679-0104	357893@bfrc.com	
TIRES PLUS TOTAL CAR CARE 5013	BRIDGESTONE/FIRESTONE	1103 N WASHINGTON BLVD	SARASOTA	SARASOTA	34236-3427	(941) 365-1231	355348@bfrc.com	
TIRES PLUS 6097 W PALM BEACH	BRIDGESTONE/FIRESTONE	1905 N JOG RD	WEST PALM BEACH	PALM BEACH	33411-2591	(561) 683-8806	355121@bfrc.com	
FIRESTONE COMPLETE AUTO CARE	BRIDGESTONE/FIRESTONE	7045 NARCOOSSEE RD	ORLANDO	ORANGE	32822-5531	(407) 384-0050	354586@bfrc.com	
FIRESTONE COMPLETE AUTO CARE	BRIDGESTONE/FIRESTONE	3106 COUNTY ROAD 44B	MOUNT DORA	LAKE	32757-9203	(352) 383-3001	354585@bfrc.com	
FIRESTONE COMPLETE AUTO CARE	BRIDGESTONE/FIRESTONE	1479 E OSCEOLA PKWY	KISSIMMEE	OSCEOLA	34744-1604	(407) 343-8102	354272@bfrc.com	
TIRES PLUS 6088 QUEENS HARBOR	BRIDGESTONE/FIRESTONE	13162 ATLANTIC BLVD	JACKSONVILLE	DUVAL	32225-3126	(904) 220-2141	354080@bfrc.com	
TIRES PLUS	BRIDGESTONE/FIRESTONE	1627 COUNTY ROAD 220	FLEMING ISLAND	CLAY	32003-4902	(904) 278-1795	349362@bfrc.com	
FIRESTONE COMPLETE AUTO CARE	BRIDGESTONE/FIRESTONE	10135 BLOOMINGDALE AVE	RIVERVIEW	HILLSBOROUGH	33578-2550	(813) 626-7939	349010@bfrc.com	Hispanic American
FIRESTONE COMPLETE AUTO CARE	BRIDGESTONE/FIRESTONE	10301 BIG BEND RD	RIVERVIEW	HILLSBOROUGH	33578-7414	(813) 741-3087	347180@bfrc.com	Woman-owned
TIRES PLUS TOTAL CAR CARE 5012	BRIDGESTONE/FIRESTONE	6603 W COLONIAL DR	ORLANDO	ORANGE	32818-6823	(407) 298-0750	347167@bfrc.com	
FIRESTONE COMPLETE AUTO CARE	BRIDGESTONE/FIRESTONE	8690 BIRD RD	MIAMI	MIAMI-DADE	33155-3216	(305) 222-9370	346858@bfrc.com	
FIRESTONE COMPLETE AUTO CARE	BRIDGESTONE/FIRESTONE	2587 S HIGHWAY 27	CLERMONT	LAKE	34711-6788	(352) 243-3832	346224@bfrc.com	
TIRES PLUS TOTAL CAR CARE 5016	BRIDGESTONE/FIRESTONE	4223 CLEVELAND AVE	FORT MYERS	LEE	33901-9007	(239) 939-3525	342009@bfrc.com	
FIRESTONE COMPLETE AUTO CARE	BRIDGESTONE/FIRESTONE	315 INDEPENDENCE RD BLDG 90075	HURLBURT FIELD	OKALOOSA	32544-5203	(850) 243-6820	328507@bfrc.com	
FIRESTONE COMPLETE AUTO CARE	BRIDGESTONE/FIRESTONE	7105 KINGFISHER ST BLDG 924	MACDILL AFB	HILLSBOROUGH	33621-5013	(813) 840-8295	328495@bfrc.com	
TIRES PLUS	BRIDGESTONE/FIRESTONE	2673 SW EDGARCE ST	PORT ST LUCIE	ST. LUCIE	34953-2701	(772) 871-0520	328386@bfrc.com	
FIRESTONE COMPLETE AUTO CARE	BRIDGESTONE/FIRESTONE	4420 EXECUTIVE CIR	FORT MYERS	LEE	33916-8003	(239) 278-3063	326824@bfrc.com	
TIRES PLUS 6084 MIDDLEBURG FL	BRIDGESTONE/FIRESTONE	1781 BLANDING BLVD	MIDDLEBURG	CLAY	32068-3837	(904) 589-9993	325121@bfrc.com	
TIRES PLUS TOTAL CAR CARE 5025	BRIDGESTONE/FIRESTONE	816 W VINE ST	KISSIMMEE	OSCEOLA	34741-4163	(407) 847-7770	324191@bfrc.com	
TIRES PLUS TOTAL CAR CARE 5049	BRIDGESTONE/FIRESTONE	3010 W HILLSBOROUGH AVE	TAMPA	HILLSBOROUGH	33614-5963	(813) 870-0021	308757@bfrc.com	
FIRESTONE COMPLETE AUTO CARE	BRIDGESTONE/FIRESTONE	6500 DYKES RD	SOUTHWEST RANCHES	BROWARD	33331-4668	(954) 680-9130	308524@bfrc.com	
FIRESTONE COMPLETE AUTO CARE	BRIDGESTONE/FIRESTONE	2580 GLADES CIR	WESTON	BROWARD	33327-2253	(954) 217-0077	308522@bfrc.com	
FIRESTONE COMPLETE AUTO CARE	BRIDGESTONE/FIRESTONE	9000 CLEARY BLVD	PLANTATION	BROWARD	33324-6213	(954) 423-3300	308521@bfrc.com	
FIRESTONE COMPLETE AUTO CARE	BRIDGESTONE/FIRESTONE	6350 N STATE ROAD 7	COCONUT CREEK	BROWARD	33073-3601	(954) 481-8856	303773@bfrc.com	
TIRES PLUS TOTAL CAR CARE 5048	BRIDGESTONE/FIRESTONE	1209 W BRANDON BLVD	BRANDON	HILLSBOROUGH	33511-4105	(813) 681-3700	303534@bfrc.com	
TIRES PLUS TOTAL CAR CARE 5011	BRIDGESTONE/FIRESTONE	1130 N WOODLAND BLVD	DELAND	VOLUSIA	32720-2251	(386) 738-2445	301558@bfrc.com	
FIRESTONE COMPLETE AUTO CARE	BRIDGESTONE/FIRESTONE	20331 BRUCE B DOWNS BLVD	TAMPA	HILLSBOROUGH	33647-2753	(813) 994-1090	301184@bfrc.com	
TIRES PLUS	BRIDGESTONE/FIRESTONE	2800 TYRONE BLVD N	ST PETERSBURG	PINELLAS	33710-3040	(727) 347-6400	298239@bfrc.com	
TIRES PLUS	BRIDGESTONE/FIRESTONE	5901 STATE ROAD 7	LAKE WORTH	PALM BEACH	33449-5456	(561) 432-8000	277964@tiresplus.com	
TIRES PLUS TOTAL CAR CARE 5111	BRIDGESTONE/FIRESTONE	5200 W SAMPLE RD	MARGATE	BROWARD	33073-3472	(954) 969-9199	267642@bfrc.com	
TIRES PLUS TOTAL CAR CARE 5110	BRIDGESTONE/FIRESTONE	5524 S FLAMINGO RD	COOPER CITY	BROWARD	33330-2728	(954) 680-6000	265753@bfrc.com	
TIRES PLUS TOTAL CAR CARE	BRIDGESTONE/FIRESTONE	6221 NW 9TH AVE	FORT LAUDERDALE	BROWARD	33309-2017	(954) 267-9594	260434@bfrc.com	
TIRES PLUS TOTAL CAR CARE 5033	BRIDGESTONE/FIRESTONE	1000 EAST BAY DR	LARGO	PINELLAS	33770-2531	(727) 585-3811	251798@bfrc.com	
TIRES PLUS TOTAL CAR CARE 5094	BRIDGESTONE/FIRESTONE	8591 SW 132ND AVE	KENDALL	MIAMI-DADE	33183-4344	(305) 752-0015	250120@bfrc.com	
TIRES PLUS TOTAL CAR CARE 7097	BRIDGESTONE/FIRESTONE	1801 W ATLANTIC AVE	DELRAY BEACH	PALM BEACH	33444-1677	(561) 272-9200	245789@bfrc.com	
DBA DON OLSON TIRE 6013	BRIDGESTONE/FIRESTONE	1620 N MCMULLEN BOOTH RD	CLEARWATER	PINELLAS	33759-2521	(727) 725-2563	244119@bfrc.com	
TIRES PLUS TOTAL CAR CARE 5023	BRIDGESTONE/FIRESTONE	2607 GULF TO BAY BLVD	CLEARWATER	PINELLAS	33759-4936	(727) 796-2322	243426@bfrc.com	
TIRES PLUS TOTAL CAR CARE 7080	BRIDGESTONE/FIRESTONE	1100 ATLANTIC BLVD	NEPTUNE BEACH	DUVAL	32266-2516	(904) 242-0811	242219@bfrc.com	
TIRES PLUS TOTAL CAR CARE 6019	BRIDGESTONE/FIRESTONE	201 N FEDERAL HWY	FORT LAUDERDALE	BROWARD	33301-1117	(954) 527-0307	242218@bfrc.com	
TIRES PLUS TOTAL CAR CARE 6008	BRIDGESTONE/FIRESTONE	7807 N WICKHAM RD	MELBOURNE	BREVARD	32940-7916	(321) 255-2344	241560@bfrc.com	
TIRES PLUS	BRIDGESTONE/FIRESTONE	7520 W STATE ROAD 84	DAVIE	BROWARD	33317-7200	(954) 382-9578	241252@bfrc.com	
TIRES PLUS TOTAL CAR CARE 6090	BRIDGESTONE/FIRESTONE	2300 SE FEDERAL HWY	STUART	MARTIN	34994-4529	(772) 286-2095	240186@bfrc.com	
TIRES PLUS TOTAL CAR CARE 6087	BRIDGESTONE/FIRESTONE	10765 NW 41ST ST	MIAMI	MIAMI-DADE	33178-1867	(305) 513-3301	240062@bfrc.com	
TIRES PLUS TOTAL CAR CARE 6091	BRIDGESTONE/FIRESTONE	1354 N WICKHAM RD	MELBOURNE	BREVARD	32935-8945	(321) 751-2126	240061@bfrc.com	
TIRES PLUS TOTAL CAR CARE 6089	BRIDGESTONE/FIRESTONE	15401 SW 137TH AVE	MIAMI	MIAMI-DADE	33177-1279	(305) 235-0027	240059@bfrc.com	
TIRES PLUS TOTAL CAR CARE 7095	BRIDGESTONE/FIRESTONE	12015 SAN JOSE BLVD	JACKSONVILLE	DUVAL	32223-1841	(904) 260-4011	239628@bfrc.com	
TIRES PLUS TOTAL CAR CARE 7094	BRIDGESTONE/FIRESTONE	1332 DUNN AVE	JACKSONVILLE	DUVAL	32218-4836	(904) 714-3781	239627@bfrc.com	
TIRES PLUS TOTAL CAR CARE 7065	BRIDGESTONE/FIRESTONE	10351 W COLONIAL DR	OCOEE	ORANGE	34761-2958	(407) 291-7714	239626@bfrc.com	Woman-owned
TIRES PLUS TOTAL CAR CARE 5290	BRIDGESTONE/FIRESTONE	9526 S US HWY 1	PORT ST LUCIE	ST. LUCIE	34952-4217	(772) 337-9001	239625@bfrc.com	
TIRES PLUS TOTAL CAR CARE 7066	BRIDGESTONE/FIRESTONE	13842 TOWNE PLACE BLVD	ORLANDO	ORANGE	32837-3345	(407) 857-0111	239547@bfrc.com	
TIRES PLUS	BRIDGESTONE/FIRESTONE	2625 N UNIVERSITY DR	SUNRISE	BROWARD	33322-2432	(954) 578-8119	236843@bfrc.com	

Manufacturer Authorized Sales & Service Center Name	Tire Brands	Street Address	City	County	Zip Code	Telephone #	E-Mail To Accept Purchase Orders	MWBE Status (if available) Y = MWBE
TIRES PLUS	BRIDGESTONE/FIRESTONE	7115 STATE ROAD 70 E	BRADENTON	MANATEE	34203-9769	(941) 752-9500	236402@bfrc.com	
TIRES PLUS TOTAL CAR CARE 7082	BRIDGESTONE/FIRESTONE	8801 NEW TAMPA BLVD	TAMPA	HILLSBOROUGH	33647-3033	(813) 558-0111	236401@bfrc.com	
TIRES PLUS TOTAL CAR CARE 6083	BRIDGESTONE/FIRESTONE	6050 20TH ST	VERO BEACH	INDIAN RIVER	32966-1021	(772) 564-8401	235791@bfrc.com	
TIRES PLUS	BRIDGESTONE/FIRESTONE	220 VALLEY CIR	PONTE VEDRA BEACH	ST. JOHNS	32082-3214	(904) 543-9922	234483@bfrc.com	
TIRES PLUS TOTAL CAR CARE 6082	BRIDGESTONE/FIRESTONE	15757 S DIXIE HWY	MIAMI	MIAMI-DADE	33157-1835	(786) 242-1300	234482@bfrc.com	
TIRES PLUS TOTAL CAR CARE 6092	BRIDGESTONE/FIRESTONE	5250 S CONWAY RD	ORLANDO	ORANGE	32812-2201	(407) 816-4773	233509@bfrc.com	
TIRES PLUS	BRIDGESTONE/FIRESTONE	1161 W STATE ROAD 434	LONGWOOD	SEMINOLE	32750-5107	(407) 767-0707	233126@bfrc.com	
TIRES PLUS	BRIDGESTONE/FIRESTONE	32894 US HWY 19 N	PALM HARBOR	PINELLAS	34684-3124	(727) 772-9668	232726@bfrc.com	
TIRES PLUS TOTAL CAR CARE 6081	BRIDGESTONE/FIRESTONE	4835 BABCOCK ST NE	PALM BAY	BREVARD	32905-2809	(321) 952-8030	232273@bfrc.com	
TIRES PLUS TOTAL CAR CARE 6012	BRIDGESTONE/FIRESTONE	1801 S US HIGHWAY 1	FORT PIERCE	ST LUCIE	34950-5145	(772) 595-1773	231844@bfrc.com	
TIRES PLUS TOTAL CAR CARE 5092	BRIDGESTONE/FIRESTONE	12123 S ORANGE BLOSSOM TRL	ORLANDO	ORANGE	32837-6502	(407) 240-7825	227196@bfrc.com	
TIRES PLUS	BRIDGESTONE/FIRESTONE	28 EGLIN PKWY NE	FORT WALTON BEACH	OKALOOSA	32548-5453	(850) 243-4741	226984@bfrc.com	
TIRES PLUS TOTAL CAR CARE 7004	BRIDGESTONE/FIRESTONE	2553 GULF BREEZE PKWY	GULF BREEZE	SANTA ROSA	32563-3043	(850) 932-3735	226983@bfrc.com	
TIRES PLUS TOTAL CAR CARE 7003	BRIDGESTONE/FIRESTONE	8565 N DAVIS HWY	PENSACOLA	ESCAMBIA	32514-5930	(850) 477-5343	226982@bfrc.com	
TIRES PLUS TOTAL CAR CARE 7002	BRIDGESTONE/FIRESTONE	8969 PENSACOLA BLVD	PENSACOLA	ESCAMBIA	32534-1928	(850) 478-1785	226980@tiresplus.com	
TIRES PLUS TOTAL CAR CARE 5009	BRIDGESTONE/FIRESTONE	2190 ALOMA AVE	WINTER PARK	ORANGE	32792-3302	(407) 644-5938	219991@bfrc.com	
TIRES PLUS TOTAL CAR CARE 5024	BRIDGESTONE/FIRESTONE	495 VENICE BYP N	VENICE	SARASOTA	34285-6038	(941) 484-3566	219819@bfrc.com	
TIRES PLUS	BRIDGESTONE/FIRESTONE	7446 STATE ROAD 54	NEW PORT RICHEY	PASCO	34653-6110	(727) 376-6675	197491@bfrc.com	
TIRES PLUS	BRIDGESTONE/FIRESTONE	6480 W COMMERCIAL BLVD	LAUDERHILL	BROWARD	33319-2111	(954) 746-0380	186007@bfrc.com	
TIRES PLUS TOTAL CAR CARE 5044	BRIDGESTONE/FIRESTONE	2551 S MCCALL RD	ENGLEWOOD	CHARLOTTE	34224-5121	(941) 475-6585	184209@bfrc.com	
TIRES PLUS TOTAL CAR CARE 5001	BRIDGESTONE/FIRESTONE	500 S MISSOURI AVE	CLEARWATER	PINELLAS	33756-5913	(727) 446-8341	179779@bfrc.com	
TIRES PLUS TOTAL CAR CARE 5028	BRIDGESTONE/FIRESTONE	925 S BROAD ST	BROOKSVILLE	HERNANDO	34601-3108	(352) 799-2991	168459@bfrc.com	
TIRES PLUS	BRIDGESTONE/FIRESTONE	2510 JAMES L REDMAN PKWY	PLANT CITY	HILLSBOROUGH	33566-7113	(813) 754-2747	161845@bfrc.com	
TIRES PLUS TOTAL CAR CARE 5042	BRIDGESTONE/FIRESTONE	800 US HIGHWAY 27 N	SEBRING	HIGHLANDS	33870-2160	(863) 382-8000	141593@bfrc.com	
TIRES PLUS	BRIDGESTONE/FIRESTONE	3663 HIGHWAY 441 S	OKEECHOBEE	OKEECHOBEE	34974-6234	(863) 467-4888	141585@bfrc.com	
TIRES PLUS TOTAL CAR CARE 6029	BRIDGESTONE/FIRESTONE	9350 SAN JOSE BLVD	JACKSONVILLE	DUVAL	32257-5583	(904) 731-7076	122262@bfrc.com	
TIRES PLUS TOTAL CAR CARE 6027	BRIDGESTONE/FIRESTONE	6381 103RD ST	JACKSONVILLE	DUVAL	32210-7734	(904) 772-9494	122114@bfrc.com	
TIRES PLUS TOTAL CAR CARE 6025	BRIDGESTONE/FIRESTONE	815 3RD ST S	JACKSONVILLE	DUVAL	32250-6609	(904) 249-3929	122092@bfrc.com	
TIRES PLUS TOTAL CAR CARE 6024	BRIDGESTONE/FIRESTONE	5403 NORMANDY BLVD	JACKSONVILLE	DUVAL	32205-6244	(904) 786-8560	122084@bfrc.com	
TIRES PLUS TOTAL CAR CARE 6022	BRIDGESTONE/FIRESTONE	5880 UNIVERSITY BLVD W	JACKSONVILLE	DUVAL	32216-0803	(904) 733-2555	122068@bfrc.com	
TIRES PLUS TOTAL CAR CARE 6054	BRIDGESTONE/FIRESTONE	405 S PINE AVE	OCALA	MARION	34471-1180	(352) 351-5052	121983@bfrc.com	
TIRES PLUS TOTAL CAR CARE 6053	BRIDGESTONE/FIRESTONE	3410 W UNIVERSITY AVE	GAINESVILLE	ALACHUA	32607-2403	(352) 373-9685	121967@bfrc.com	
TIRES PLUS TOTAL CAR CARE 6052	BRIDGESTONE/FIRESTONE	3302 NW 13TH ST	GAINESVILLE	ALACHUA	32609-2171	(352) 378-5982	121959@bfrc.com	
TIRES PLUS TOTAL CAR CARE 6033	BRIDGESTONE/FIRESTONE	10361 ATLANTIC BLVD	JACKSONVILLE	DUVAL	32225-6604	(904) 998-9200	121738@bfrc.com	Woman-owned
TIRES PLUS TOTAL CAR CARE 6032	BRIDGESTONE/FIRESTONE	169 BLANDING BLVD	ORANGE PARK	CLAY	32073-3354	(904) 272-7333	121711@bfrc.com	
TIRES PLUS	BRIDGESTONE/FIRESTONE	1600 US HIGHWAY 1 S	ST AUGUSTINE	ST JOHNS	32084-2084	(904) 824-0440	121681@bfrc.com	
TIRES PLUS TOTAL CAR CARE 5085	BRIDGESTONE/FIRESTONE	820 E BLOOMINGDALE AVE	BRANDON	HILLSBOROUGH	33511-8109	(813) 643-7475	117269@bfrc.com	
TIRES PLUS TOTAL CAR CARE 5008	BRIDGESTONE/FIRESTONE	1010 W KENNEDY BLVD	TAMPA	HILLSBOROUGH	33606-1940	(813) 228-9467	115363@bfrc.com	Hispanic American
TIRES PLUS TOTAL CAR CARE 5039	BRIDGESTONE/FIRESTONE	3694 TAMPA RD	OLDSMAR	PINELLAS	34677-6305	(813) 854-2371	114634@bfrc.com	
TIRES PLUS TOTAL CAR CARE 5040	BRIDGESTONE/FIRESTONE	2601 E GULF TO LAKE HWY	INVERNESS	CITRUS	34453-3216	(352) 637-3322	111899@bfrc.com	
TIRES PLUS TOTAL CAR CARE 5089	BRIDGESTONE/FIRESTONE	15907 PINES BLVD	PEMBROKE PINES	BROWARD	33027-1201	(954) 435-0999	105481@bfrc.com	
TIRES PLUS TOTAL CAR CARE 5086	BRIDGESTONE/FIRESTONE	155 HANCOCK BRIDGE PKWY	CAPE CORAL	LEE	33990-1063	(239) 458-0200	105473@bfrc.com	
TIRES PLUS TOTAL CAR CARE 5091	BRIDGESTONE/FIRESTONE	2820 WESTON RD	WESTON	BROWARD	33331-3613	(954) 349-7011	105317@bfrc.com	
TIRES PLUS TOTAL CAR CARE 5090	BRIDGESTONE/FIRESTONE	4200 13TH ST	SAINT CLOUD	OSCEOLA	34769-6721	(407) 957-3360	105309@bfrc.com	
TIRES PLUS	BRIDGESTONE/FIRESTONE	1865 N FLAMINGO RD	SUNRISE	BROWARD	33323-2129	(954) 851-1191	099481@bfrc.com	
TIRES PLUS TOTAL CAR CARE 5084	BRIDGESTONE/FIRESTONE	630 RIVERSIDE DR	CORAL SPRINGS	BROWARD	33071-7615	(954) 755-5066	099473@bfrc.com	
TIRES PLUS TOTAL CAR CARE 5038	BRIDGESTONE/FIRESTONE	5240 GALL BLVD	ZEPHYRHILLS	PASCO	33542-4019	(813) 788-1200	074802@bfrc.com	
TIRES PLUS	BRIDGESTONE/FIRESTONE	1621 LAND O LAKES BLVD	LUTZ	PASCO	33549-2908	(813) 949-7407	066834@bfrc.com	
TIRES PLUS	BRIDGESTONE/FIRESTONE	8990 N MILITARY TRL	PALM BEACH GARDENS	PALM BEACH	33410-6249	(561) 691-0340	046493@bfrc.com	
TIRES PLUS TOTAL CAR CARE 5068	BRIDGESTONE/FIRESTONE	2605 SW 34TH ST	GAINESVILLE	ALACHUA	32608-1603	(352) 380-0807	046485@bfrc.com	
TIRES PLUS TOTAL CAR CARE 5082	BRIDGESTONE/FIRESTONE	2240 CITRUS BLVD	LEESBURG	LAKE	34748-3009	(352) 315-1488	046418@bfrc.com	
TIRES PLUS TOTAL CAR CARE 5080	BRIDGESTONE/FIRESTONE	10105 SOUTHERN BLVD	ROYAL PALM BEACH	PALM BEACH	33411-4336	(561) 753-8680	046400@bfrc.com	Hispanic American
FIRESTONE COMPLETE AUTO CARE	BRIDGESTONE/FIRESTONE	3060 SE FEDERAL HWY	STUART	MARTIN	34994-5528	(772) 286-9711	029416@bfrc.com	
FIRESTONE COMPLETE AUTO CARE	BRIDGESTONE/FIRESTONE	9009 US HIGHWAY 19	PORT RICHEY	PASCO	34668-4850	(727) 845-1094	029394@bfrc.com	
FIRESTONE COMPLETE AUTO CARE	BRIDGESTONE/FIRESTONE	6205 14TH ST W	BRADENTON	MANATEE	34207-4611	(941) 755-0210	029386@bfrc.com	
FIRESTONE COMPLETE AUTO CARE	BRIDGESTONE/FIRESTONE	7300 W COMMERCIAL BLVD	LAUDERHILL	BROWARD	33319-2128	(954) 748-8334	029351@bfrc.com	
FIRESTONE COMPLETE AUTO CARE	BRIDGESTONE/FIRESTONE	13701 N DALE MABRY HWY	TAMPA	HILLSBOROUGH	33618-2417	(813) 963-3188	029343@bfrc.com	
FIRESTONE COMPLETE AUTO CARE	BRIDGESTONE/FIRESTONE	369 W HIGHWAY 436	ALTAMONTE SPRINGS	SEMINOLE	32714-4146	(407) 869-5500	029297@bfrc.com	
FIRESTONE COMPLETE AUTO CARE	BRIDGESTONE/FIRESTONE	4060 BEE RIDGE RD	SARASOTA	SARASOTA	34233-2548	(941) 371-5927	029181@bfrc.com	
FIRESTONE COMPLETE AUTO CARE	BRIDGESTONE/FIRESTONE	1685 NW 107TH AVE	MIAMI	MIAMI-DADE	33172-2707	(305) 594-3377	028754@bfrc.com	
FIRESTONE COMPLETE AUTO CARE	BRIDGESTONE/FIRESTONE	10553 SAN JOSE BLVD	JACKSONVILLE	DUVAL	32257-6208	(904) 268-2921	028444@bfrc.com	Hispanic American
FIRESTONE COMPLETE AUTO CARE	BRIDGESTONE/FIRESTONE	12876 S CLEVELAND AVE	FORT MYERS	LEE	33907-3812	(239) 939-7040	028339@bfrc.com	
FIRESTONE COMPLETE AUTO CARE	BRIDGESTONE/FIRESTONE	899 S ORLANDO AVE	WINTER PARK	ORANGE	32789-4846	(407) 629-4619	027901@bfrc.com	
FIRESTONE COMPLETE AUTO CARE	BRIDGESTONE/FIRESTONE	3620 E COLONIAL DR	ORLANDO	ORANGE	32803-5118	(407) 898-0142	027898@bfrc.com	
FIRESTONE COMPLETE AUTO CARE	BRIDGESTONE/FIRESTONE	3810 JOG RD	GREENACRES	PALM BEACH	33467-1530	(561) 965-8001	027871@bfrc.com	
FIRESTONE COMPLETE AUTO CARE	BRIDGESTONE/FIRESTONE	5625 SW 137TH AVE	MIAMI	MIAMI-DADE	33183-1101	(305) 385-1987	027863@bfrc.com	
FIRESTONE COMPLETE AUTO CARE	BRIDGESTONE/FIRESTONE	6291 9TH ST N	ST PETERSBURG	PINELLAS	33702-6619	(727) 527-6451	027855@bfrc.com	
FIRESTONE COMPLETE AUTO CARE	BRIDGESTONE/FIRESTONE	532 MARY ESTHER CUT OFF NW	FORT WALTON BEACH	OKALOOSA	32548-4025	(850) 243-8900	027073@bfrc.com	
FIRESTONE COMPLETE AUTO CARE	BRIDGESTONE/FIRESTONE	9780 S MILITARY TRL	BOYNTON BEACH	PALM BEACH	33436-3218	(561) 736-3602	026816@bfrc.com	
FIRESTONE COMPLETE AUTO CARE	BRIDGESTONE/FIRESTONE	350 SEMORAN BLVD SR436	CASSELBERRY	SEMINOLE	32707-4910	(407) 339-2810	026352@bfrc.com	

Manufacturer Authorized Sales & Service Center Name	Tire Brands	Street Address	City	County	Zip Code	Telephone #	E-Mail To Accept Purchase Orders	MWBE Status (if available) Y = MWBE
FIRESTONE COMPLETE AUTO CARE	BRIDGESTONE/FIRESTONE	5960 RED BUG LAKE RD	WINTER SPRINGS	SEMINOLE	32708-5000	(407) 699-7332	026247@bfrc.com	
FIRESTONE COMPLETE AUTO CARE	BRIDGESTONE/FIRESTONE	1809 STATE ROAD 60 E	VALRICO	HILLSBOROUGH	33594-3623	(813) 684-8038	025976@bfrc.com	
FIRESTONE COMPLETE AUTO CARE	BRIDGESTONE/FIRESTONE	15135 SW 122ND AVE	MIAMI	MIAMI-DADE	33186-5909	(305) 233-5356	025887@bfrc.com	
FIRESTONE COMPLETE AUTO CARE	BRIDGESTONE/FIRESTONE	3940 US HWY 98	LAKELAND	POLK	33809-3813	(863) 859-6300	025747@bfrc.com	
FIRESTONE COMPLETE AUTO CARE	BRIDGESTONE/FIRESTONE	5180 W ATLANTIC AVE	DELRAY BEACH	PALM BEACH	33484-8108	(561) 496-0446	025100@bfrc.com	
FIRESTONE COMPLETE AUTO CARE	BRIDGESTONE/FIRESTONE	2211 APALACHEE PKWY	TALLAHASSEE	LEON	32301-4820	(850) 877-0184	024988@bfrc.com	
FIRESTONE COMPLETE AUTO CARE	BRIDGESTONE/FIRESTONE	10761 E COLONIAL DR	UNION PARK	ORANGE	32817-4472	(407) 249-7707	023167@bfrc.com	
FIRESTONE COMPLETE AUTO CARE	BRIDGESTONE/FIRESTONE	5105 S FLORIDA AVE	LAKELAND	POLK	33813-2513	(863) 647-1907	023043@bfrc.com	
FIRESTONE COMPLETE AUTO CARE	BRIDGESTONE/FIRESTONE	1259 N FEDERAL HWY	BOCA RATON	PALM BEACH	33432-2831	(561) 392-5080	022853@bfrc.com	
FIRESTONE COMPLETE AUTO CARE	BRIDGESTONE/FIRESTONE	1 W HALLANDALE BEACH BLVD	HALLANDALE BEACH	BROWARD	33009-5437	(954) 458-0288	022764@bfrc.com	
FIRESTONE COMPLETE AUTO CARE	BRIDGESTONE/FIRESTONE	2901 S UNIVERSITY DR	DAVIE	BROWARD	33328-1416	(954) 472-9554	022381@bfrc.com	
FIRESTONE COMPLETE AUTO CARE	BRIDGESTONE/FIRESTONE	8202 LAKE UNDERHILL RD	ORLANDO	ORANGE	32825-3524	(407) 382-0894	020850@bfrc.com	
FIRESTONE COMPLETE AUTO CARE	BRIDGESTONE/FIRESTONE	15697 SW 88TH ST	MIAMI	MIAMI-DADE	33196-1105	(305) 387-1378	020532@bfrc.com	
FIRESTONE COMPLETE AUTO CARE	BRIDGESTONE/FIRESTONE	9799 S DIXIE HWY	MIAMI	MIAMI-DADE	33156-2806	(305) 665-6461	019437@bfrc.com	
FIRESTONE COMPLETE AUTO CARE	BRIDGESTONE/FIRESTONE	4712 BLANDING BLVD	JACKSONVILLE	DUVAL	32210-7327	(904) 771-1383	018538@bfrc.com	
FIRESTONE COMPLETE AUTO CARE	BRIDGESTONE/FIRESTONE	854 LEE RD	ORLANDO	ORANGE	32810-5519	(407) 645-2515	018430@bfrc.com	
FIRESTONE COMPLETE AUTO CARE	BRIDGESTONE/FIRESTONE	5505 HANLEY RD	TAMPA	HILLSBOROUGH	33634-4903	(813) 885-7651	018384@bfrc.com	
FIRESTONE COMPLETE AUTO CARE	BRIDGESTONE/FIRESTONE	4436 CURRY FORD RD	ORLANDO	ORANGE	32812-2702	(407) 273-9730	018074@bfrc.com	
FIRESTONE COMPLETE AUTO CARE	BRIDGESTONE/FIRESTONE	1501 W BRANDON BLVD	BRANDON	HILLSBOROUGH	33511-4805	(813) 685-4558	018015@bfrc.com	
FIRESTONE COMPLETE AUTO CARE	BRIDGESTONE/FIRESTONE	4070 OKEECHOBEE BLVD	WEST PALM BEACH	PALM BEACH	33409-3202	(561) 689-8850	016373@bfrc.com	
FIRESTONE COMPLETE AUTO CARE	BRIDGESTONE/FIRESTONE	1801 NW 40TH AVE	LAUDERHILL	BROWARD	33313-5007	(954) 739-0993	016063@bfrc.com	
FIRESTONE COMPLETE AUTO CARE	BRIDGESTONE/FIRESTONE	541 NORTHLAKE BLVD	NORTH PALM BEACH	PALM BEACH	33408-5408	(561) 842-3763	015849@bfrc.com	
FIRESTONE COMPLETE AUTO CARE	BRIDGESTONE/FIRESTONE	6580 NW 186TH ST	HIALEAH	MIAMI-DADE	33015-6004	(305) 822-5101	015431@bfrc.com	
FIRESTONE COMPLETE AUTO CARE	BRIDGESTONE/FIRESTONE	1003 CAPE CORAL PKWY E	CAPE CORAL	LEE	33904-9160	(239) 542-5982	015350@bfrc.com	Hispanic American
FIRESTONE COMPLETE AUTO CARE	BRIDGESTONE/FIRESTONE	20701 S FEDERAL HWY	MIAMI	MIAMI-DADE	33189-2215	(305) 233-7841	015253@bfrc.com	
FIRESTONE COMPLETE AUTO CARE	BRIDGESTONE/FIRESTONE	2880 CHENEY HWY	TITUSVILLE	BREVARD	32780-6731	(321) 268-5560	014680@bfrc.com	
FIRESTONE COMPLETE AUTO CARE	BRIDGESTONE/FIRESTONE	4901 W KENNEDY BLVD	TAMPA	HILLSBOROUGH	33609-1801	(813) 286-1182	014583@bfrc.com	
FIRESTONE COMPLETE AUTO CARE	BRIDGESTONE/FIRESTONE	7179 N DAVIS HWY	PENSACOLA	ESCAMBIA	32504-6208	(850) 478-8318	014427@bfrc.com	
FIRESTONE COMPLETE AUTO CARE	BRIDGESTONE/FIRESTONE	8701 SW 72ND AVE	MIAMI	MIAMI-DADE	33143-7806	(305) 667-4866	014400@bfrc.com	
FIRESTONE COMPLETE AUTO CARE	BRIDGESTONE/FIRESTONE	777 E MERRITT ISLAND CSWY	MERRITT ISLAND	BREVARD	32952-3576	(321) 453-6757	014346@bfrc.com	
FIRESTONE COMPLETE AUTO CARE	BRIDGESTONE/FIRESTONE	9501 ARLINGTON EXPY	JACKSONVILLE	DUVAL	32225-8293	(904) 721-3049	014230@bfrc.com	
FIRESTONE COMPLETE AUTO CARE	BRIDGESTONE/FIRESTONE	1595 W 49TH ST	HIALEAH	MIAMI-DADE	33012-2924	(305) 556-0444	014206@bfrc.com	
FIRESTONE COMPLETE AUTO CARE	BRIDGESTONE/FIRESTONE	1760 W INTERNATIONAL SPEEDWAY BLVD	DAYTONA BEACH	VOLUSIA	32114-1387	(386) 255-3306	014176@bfrc.com	
FIRESTONE COMPLETE AUTO CARE	BRIDGESTONE/FIRESTONE	3744 SW ARCHER RD	GAINESVILLE	ALACHUA	32608-2338	(352) 376-7617	014141@bfrc.com	
FIRESTONE COMPLETE AUTO CARE	BRIDGESTONE/FIRESTONE	725 N MAIN ST	GAINESVILLE	ALACHUA	32601-5326	(352) 376-4438	014133@bfrc.com	
FIRESTONE COMPLETE AUTO CARE	BRIDGESTONE/FIRESTONE	303 301 BLVD W	BRADENTON	MANATEE	34205-7955	(941) 748-5730	014028@bfrc.com	
FIRESTONE COMPLETE AUTO CARE	BRIDGESTONE/FIRESTONE	2680 ENTERPRISE RD	ORANGE CITY	VOLUSIA	32763-8219	(386) 775-1004	013625@bfrc.com	
FIRESTONE COMPLETE AUTO CARE	BRIDGESTONE/FIRESTONE	36298 US HIGHWAY 19 N	PALM HARBOR	PINELLAS	34684-1455	(727) 785-8824	013161@bfrc.com	
FIRESTONE COMPLETE AUTO CARE	BRIDGESTONE/FIRESTONE	400 W STATE ROAD 434	LONGWOOD	SEMINOLE	32750-5118	(407) 830-5557	012734@bfrc.com	
FIRESTONE COMPLETE AUTO CARE	BRIDGESTONE/FIRESTONE	2121 STICKNEY POINT RD	SARASOTA	SARASOTA	34231-4803	(941) 922-4843	012378@bfrc.com	
FIRESTONE COMPLETE AUTO CARE	BRIDGESTONE/FIRESTONE	5044 BAYOU BLVD	PENSACOLA	ESCAMBIA	32503-2504	(850) 484-3219	011746@bfrc.com	
FIRESTONE COMPLETE AUTO CARE	BRIDGESTONE/FIRESTONE	3812 S NOVA RD	PORT ORANGE	VOLUSIA	32127-4949	(386) 760-0374	011630@bfrc.com	
FIRESTONE COMPLETE AUTO CARE	BRIDGESTONE/FIRESTONE	841 BLANDING BLVD	ORANGE PARK	CLAY	32065-6203	(904) 276-3880	011495@bfrc.com	
FIRESTONE COMPLETE AUTO CARE	BRIDGESTONE/FIRESTONE	15155 MCGREGOR BLVD	FORT MYERS	LEE	33908-1957	(239) 481-8212	010502@bfrc.com	
FIRESTONE COMPLETE AUTO CARE	BRIDGESTONE/FIRESTONE	11288 PINES BLVD	PEMBROKE PINES	BROWARD	33026-4101	(954) 437-8644	009814@bfrc.com	
FIRESTONE COMPLETE AUTO CARE	BRIDGESTONE/FIRESTONE	3542 NW FEDERAL HWY	JENSEN BEACH	MARTIN	34957-4424	(772) 692-3194	008788@bfrc.com	
FIRESTONE COMPLETE AUTO CARE	BRIDGESTONE/FIRESTONE	1551 FLORIDA MALL AVE	ORLANDO	ORANGE	32809-7735	(407) 857-4818	008133@bfrc.com	
FIRESTONE COMPLETE AUTO CARE	BRIDGESTONE/FIRESTONE	1387 N STATE ROAD 7	NORTH LAUDERDALE	BROWARD	33068-4023	(954) 977-0007	007250@bfrc.com	
FIRESTONE COMPLETE AUTO CARE	BRIDGESTONE/FIRESTONE	1560 PALM BAY RD NE	PALM BAY	BREVARD	32905-3845	(321) 984-4300	007161@bfrc.com	
FIRESTONE COMPLETE AUTO CARE	BRIDGESTONE/FIRESTONE	2020 N UNIVERSITY DR	CORAL SPRINGS	BROWARD	33071-6133	(954) 753-2302	006823@bfrc.com	
FIRESTONE COMPLETE AUTO CARE	BRIDGESTONE/FIRESTONE	5505 S SEMORAN BLVD	ORLANDO	ORANGE	32822-1735	(407) 381-9535	005983@bfrc.com	
FIRESTONE COMPLETE AUTO CARE	BRIDGESTONE/FIRESTONE	237 BLANDING BLVD	ORANGE PARK	CLAY	32073-3357	(904) 272-0860	005770@bfrc.com	
FIRESTONE COMPLETE AUTO CARE	BRIDGESTONE/FIRESTONE	1919 DEL PRADO BLVD S	CAPE CORAL	LEE	33990-4559	(239) 772-8844	005266@bfrc.com	
FIRESTONE COMPLETE AUTO CARE	BRIDGESTONE/FIRESTONE	5998 NORMANDY BLVD	JACKSONVILLE	DUVAL	32205-6212	(904) 786-0821	004871@bfrc.com	
FIRESTONE COMPLETE AUTO CARE	BRIDGESTONE/FIRESTONE	903 S STATE RD 84	FORT LAUDERDALE	BROWARD	33315-2431	(954) 522-3755	004553@bfrc.com	
FIRESTONE COMPLETE AUTO CARE	BRIDGESTONE/FIRESTONE	1441 S BABCOCK ST	MELBOURNE	BREVARD	32901-3013	(321) 722-7341	004545@bfrc.com	
FIRESTONE COMPLETE AUTO CARE	BRIDGESTONE/FIRESTONE	4325 CLEVELAND AVE	FORT MYERS	LEE	33901-9009	(239) 936-4101	004537@bfrc.com	
FIRESTONE COMPLETE AUTO CARE	BRIDGESTONE/FIRESTONE	1306 19TH PL	VERO BEACH	INDIAN RIVER	32960-3544	(772) 562-5465	004510@bfrc.com	
FIRESTONE COMPLETE AUTO CARE	BRIDGESTONE/FIRESTONE	16251 MIAMI DR	NORTH MIAMI BEACH	MIAMI-DADE	33162-4629	(305) 949-4386	004502@bfrc.com	
FIRESTONE COMPLETE AUTO CARE	BRIDGESTONE/FIRESTONE	110 NE 8TH ST	HOMESTEAD	MIAMI-DADE	33030-4608	(305) 247-2544	004499@bfrc.com	
FIRESTONE COMPLETE AUTO CARE	BRIDGESTONE/FIRESTONE	12120 US HIGHWAY 1	NORTH PALM BEACH	PALM BEACH	33408-2642	(561) 624-2601	004391@bfrc.com	
FIRESTONE COMPLETE AUTO CARE	BRIDGESTONE/FIRESTONE	1008 UNIVERSITY BLVD N	JACKSONVILLE	DUVAL	32211-5532	(904) 743-2525	004375@bfrc.com	Hispanic American
FIRESTONE COMPLETE AUTO CARE	BRIDGESTONE/FIRESTONE	106 N DIXIE HWY	HOLLYWOOD	BROWARD	33020-6704	(954) 923-2311	004340@bfrc.com	Hispanic American
FIRESTONE COMPLETE AUTO CARE	BRIDGESTONE/FIRESTONE	4160 OKEECHOBEE RD	FORT PIERCE	ST LUCIE	34947-5403	(772) 461-0700	004324@bfrc.com	
FIRESTONE COMPLETE AUTO CARE	BRIDGESTONE/FIRESTONE	217 SE 6TH AVE	DELRAY BEACH	PALM BEACH	33483-5226	(561) 278-0341	004294@bfrc.com	
FIRESTONE COMPLETE AUTO CARE	BRIDGESTONE/FIRESTONE	212 S PINE AVE	OCALA	MARION	34471-1169	(352) 622-8106	004227@bfrc.com	
FIRESTONE COMPLETE AUTO CARE	BRIDGESTONE/FIRESTONE	300 S RIDGEWOOD AVE	DAYTONA BEACH	VOLUSIA	32114-4934	(386) 255-7444	004162@bfrc.com	
FIRESTONE COMPLETE AUTO CARE	BRIDGESTONE/FIRESTONE	590 AVENUE A SW	WINTER HAVEN	POLK	33880-2934	(863) 293-2116	004154@bfrc.com	
FIRESTONE COMPLETE AUTO CARE	BRIDGESTONE/FIRESTONE	900 E KENNEDY BLVD	TAMPA	HILLSBOROUGH	33602-3508	(813) 229-2626	004146@bfrc.com	
FIRESTONE COMPLETE AUTO CARE	BRIDGESTONE/FIRESTONE	601 W 1ST ST	SANFORD	SEMINOLE	32771-1119	(407) 322-0244	004081@bfrc.com	

Manufacturer Authorized Sales & Service Center Name	Tire Brands	Street Address	City	County	Zip Code	Telephone #	E-Mail To Accept Purchase Orders	MWBE Status (if available) Y = MWBE
FIRESTONE COMPLETE AUTO CARE	BRIDGESTONE/FIRESTONE	9035 N FLORIDA AVE	TAMPA	HILLSBOROUGH	33604-1419	(813) 932-4363	004057@bfrc.com	
FIRESTONE COMPLETE AUTO CARE	BRIDGESTONE/FIRESTONE	7700 49TH ST N	PINELLAS PARK	PINELLAS	33781-3440	(727) 544-6601	004049@bfrc.com	
FIRESTONE COMPLETE AUTO CARE	BRIDGESTONE/FIRESTONE	5101 W COLONIAL DR	ORLANDO	ORANGE	32808-7603	(407) 293-9271	004022@bfrc.com	
FIRESTONE COMPLETE AUTO CARE	BRIDGESTONE/FIRESTONE	952 PATRICIA AVE	DUNEDIN	PINELLAS	34698-6023	(727) 733-4177	003972@bfrc.com	
FIRESTONE COMPLETE AUTO CARE	BRIDGESTONE/FIRESTONE	501 N MONROE ST	TALLAHASSEE	LEON	32301-1259	(850) 222-0190	003557@bfrc.com	
FIRESTONE COMPLETE AUTO CARE	BRIDGESTONE/FIRESTONE	3311 N PACE BLVD	PENSACOLA	ESCAMBIA	32505-5125	(850) 433-3125	003530@bfrc.com	
FIRESTONE COMPLETE AUTO CARE	BRIDGESTONE/FIRESTONE	2051 MARTIN LUTHER KING JR BLV	PANAMA CITY	BAY	32405-5316	(850) 763-6561	003468@bfrc.com	
FIRESTONE COMPLETE AUTO CARE	BRIDGESTONE/FIRESTONE	4386 LAFAYETTE ST	MARIANNA	JACKSON	32446-3356	(850) 482-4991	003441@bfrc.com	
WEST BOYNTON TIRE AND AUTO	BRIDGESTONE/FIRESTONE	7450 W BOYNTON BEACH BLVD	BOYNTON BEACH	PALM BEACH	33437-3883	(954) 520-0300		
DELRAY TIRE AND AUTO SERVICE CENTER	BRIDGESTONE/FIRESTONE	90 N CONGRESS AVE	DELRAY BEACH	PALM BEACH	33445-3417	(954) 520-0300		
ST LUCIE BATTERY & TIRE	BRIDGESTONE/FIRESTONE	16087 SW WARFIELD BLVD	INDIANTOWN	MARTIN	34956-4404	(772) 597-3741		
CESAR TIRE SERVICES INC	BRIDGESTONE/FIRESTONE	19160 SW 177TH AVE	MIAMI	MIAMI-DADE	33187-2004	(786) 229-8888		
MEBCO TIRE & SERVICE	BRIDGESTONE/FIRESTONE	10541 SW 40TH ST	MIAMI	MIAMI-DADE	33165-3747	(786) 497-0476		Hispanic American
FIRESTONE COMPLETE AUTO CARE	BRIDGESTONE/FIRESTONE	SILVER STAR LAKE JOHIO	OCOEE	ORANGE	34761-0000	(352) 205-4323	913352@BFUSA.COM	
FIRESTONE COMPLETE AUTO CARE	BRIDGESTONE/FIRESTONE	OKEECHOBEE BLVD & ROYAL PALM BEACH	ROYAL PALM BEACH	PALM BEACH	33411-0000	(561) 739-1214	913350@BFUSA.COM	

FSA TIRE CONTRACT: FSA25-TRS27.0

TIRE MANUFACTURER AUTHORIZED SALES AND SERVICE CENTERS

MANUFACTURER NAME: _Continental Tire the Americas, LLC__
MANUFACTURER FEIN #: _34-1417030_____

Manufacturer Authorized Sales & Service Center Name		Street Address	City	County	Zip Code	Telephone #	E-Mail To Accept Purchase Orders	MWBE Status (if available) Y = MWBE
A OK TIRE MART	Continental/Genera	200 W MAIN ST	APOPKA	Orange	32703	(407) 889-7074	dwilli6573@aol.com	N/A
ACTION GATOR TIRE	Continental/Genera	1717 LEE ROAD	ORLANDO	Orange	32810	(407) 299-1900	mhazen@actiongatortire.com	N/A
AKRON TIRE CO INC	Continental/Genera	1505 COMMERCE BLVD	MIDWAY	Gadsden	32343	(850) 580-4010	amaxwell@atd-us.com	N/A
AMERICAN TIRE DIST #053	Continental/Genera	7502 SEARS BLVD	PENSACOLA	Escambia	32514	(800) 804-0948	amaxwell@atd-us.com	N/A
AMERICAN TIRE DIST #058	Continental/Genera	4723 CAPITAL CIRCLE	TALLAHASSEE	Leon	32303	(800) 476-7946	amaxwell@atd-us.com	N/A
AMERICAN TIRE DIST #095	Continental/Genera	8751 SKINNER CT	ORLANDO	Orange	32824	(407) 850-2151	amaxwell@atd-us.com	N/A
AMERICAN TIRE DIST #111	Continental/Genera	11700 MIRAMAR PARKWA	MIRAMAR	Broward	33025	(954) 874 9410	kgrzymala@atd-us.com	N/A
AMERICAN TIRE DIST #114	Continental/Genera	3971 VERONICA S. SHO	FORT MYERS	Lee	33916	(239) 337-5555	kgrzymala@atd-us.com	N/A
AMERICAN TIRE DIST #117	Continental/Genera	4410 EAGLE FALLS PLA	TAMPA	Hillsborough	33619	(800) 683-7999	gwatts@atd-us.com	N/A
AMERICAN TIRE DISTRIBUTORS #1	Continental/Genera	7051 STUART AVENUE	JACKSONVILLE	Duval	32254	(800) 476-4826	gwatts@atd-us.com	N/A
AOK TIRE MART	Continental/Genera	1215 S FRENCH AVE	SANFORD	Seminole	32771	(407) 330-3588		N/A
BIG TIRES & MORE	Continental/Genera	5317 PARK BOULEVARD	PINELLAS PARK	Pinellas	33781	(727) 541-5707		N/A
BOB LEE'S	Continental/Genera	1631 4TH ST N	SAINT PETERSBURG	Pinellas	33704	(727) 822-3981		N/A
BOULEVARD TIRE	Continental/Genera	1205 BISCAYNE BLVD	DELAND	Volusia	32724	(904) 734-6447	cmontgomery@boulevardtire.com	N/A
BOULEVARD TIRE CENTER	Continental/Genera	4201 S. STATE ROAD 7	FORT LAUDERDALE	Broward	33314	954-792-7799	ALAKHANI@BOULEVARDTIRE.COM	N/A
BOULEVARD TIRE CENTER	Continental/Genera	4801 NORTH HWY 19 A	MOUNT DORA	Lake	32757	(352) 357-4040	ajohnson@boulevardtire.com	N/A
BOULEVARD TIRE CENTER	Continental/Genera	424 W. 13 STREET	RIVIERA BEACH	Palm Beach	33404	(561) 842-4332	ajacobs@boulevardtire.com	N/A
BOULEVARD TIRE CENTER	Continental/Genera	570 HENDERSON RD	JACKSONVILLE	Duval	32254	(386) 740-0279	bcooke@boulevardtire.com	N/A
BOULEVARD TIRE CENTER	Continental/Genera	7051 ALICO ROAD	FORT MYERS	Lee	33912	(239) 267-4701	CHUGHES@BOULEVARDTIRE.COM	N/A
BOULEVARD TIRE CENTER	Continental/Genera	800 NOVA ROAD	DAYTONA BEACH	Volusia	32114	(904) 258-8129	cparadis@boulevardtire.com	N/A
BOULEVARD TIRE CENTER	Continental/Genera	828 NORTH EDGEWOOD A	JACKSONVILLE	Duval	32254	(904) 388-5457	DROBERTS@BOULEVARDTIRE.COM	N/A
BOULEVARD TIRE CENTER	Continental/Genera	5178 DUNCAN ROAD	PUNTA GORDA	Charlotte	33982	941-639-7788	dbrown@boulevardtire.com	N/A
BOULEVARD TIRE CENTER	Continental/Genera	1609 N COCOA BLVD	COCOA	Brevard	32922	(407) 639-3077	DMOYE@BOULEVARDTIRE.COM	N/A
BOULEVARD TIRE CENTER	Continental/Genera	418 S HWY 27/441	LADY LAKE	Lake	32159	(352) 430-2380	dwheeler@boulevardtire.com	N/A

Internal

BOULEVARD TIRE CENTER	Continental/Genera	2750 S KINGS HWY	FORT PIERCE	Saint Lucie	34945	(772) 489-8473	kwinckel@boulevardtire.com	N/A
BOULEVARD TIRE CENTER	Continental/Genera	910 US HWY 27 N	LAKE HAMILTON	Polk	33851	(863) 439-3608	LMATHIS@BOULEVARDTIRE.COM	N/A
BOULEVARD TIRE CENTER	Continental/Genera	1717 PINE RIDGE ROAD	NAPLES	Collier	34109	(386) 586-6088	jkwiatkowski@boulevardtire.com	N/A
BOULEVARD TIRE CENTER	Continental/Genera	201 N STATE ST	BUNNELL	Flagler	32110	(386) 586-6088	jkwiatkowski@boulevardtire.com	N/A
BOULEVARD TIRE CENTER	Continental/Genera	3680 NOVA ROAD	PORT ORANGE	Volusia	32129	(386) 734-3447	jkwiatkowski@boulevardtire.com	N/A
BOULEVARD TIRE CENTER	Continental/Genera	3850 N.W. 30TH AVE	MIAMI	Miami-dade	33142	(305) 635-8116	jkwiatkowski@boulevardtire.com	N/A
BOULEVARD TIRE CENTER	Continental/Genera	915 US HWY 27 N	HAINES CITY	Polk	33844	(305) 635-8116	jkwiatkowski@boulevardtire.com	N/A
BOULEVARD TIRE CENTER-TAMPA	Continental/Genera	6815 ADAMO DRIVE	TAMPA	Hillsborough	33619	(813) 621-5445	alollar@boulevardtire.com	N/A
BRIDGESTONE FIRESTONE JACKSON	Continental/Genera	4950 NEW WORLD AVE	JACKSONVILLE	Duval	32221	904-779-8300		N/A
CALLAGHAN TIRE	Continental/Genera	7075 W 12TH STREET	JACKSONVILLE	Duval	32220	(904) 693-4999	bawhitt@yahoo.com	N/A
CARROLL TIRE #3029	Continental/Genera	351 LEONARD BLVD STE	LEHIGH ACRES	Lee	33971	(239) 938-9970		N/A
CARROLL'S INC #3021	Continental/Genera	5151 TYLER LAKES BLV	WEST PALM BEACH	Palm Beach	33407	(561) 840-8595	fgarcia@carrolltire.com	N/A
CARROLL'S INC #C13	Continental/Genera	401 N ELLIS ROAD	JACKSONVILLE	Duval	32254	(904) 781 5636	fgarcia@carrolltire.com	N/A
CARROLL'S INC #C17	Continental/Genera	6072 CINDERLANE PARK	ORLANDO	Orange	32810	(407) 2980440	fgarcia@carrolltire.com	N/A
CARROLL'S INC #C23	Continental/Genera	3107 E GRACE ST	TAMPA	Hillsborough	33605	(813) 247-5051	fgarcia@carrolltire.com	N/A
CHRISTENSEN ENTERPIRSES SOUTH	Continental/Genera	1751A NW 136TH AVE	SUNRISE	Broward	33323	(954) 846-8704		N/A
CHRISTENSEN ENTERPIRSES SOUTH	Continental/Genera	377 S FEDERAL HIGHWA	DEERFIELD BEACH	Broward	33441	(954) 427-8484		N/A
CONLAN TIRE	Continental/Genera	5233 COMMONWEALTH AV	JACKSONVILLE	Duval	32254	(904) 719-7460	abyrd@conlantire.com	N/A
CONLAN TIRE	Continental/Genera	1901 BLOUNT RD	POMPANO BEACH	Broward	33069	(754) 220-9880	asawyer@conlantire.com	N/A
CONLAN TIRE	Continental/Genera	2636 NW 74TH PLACE	GAINESVILLE	Alachua	32653	(352) 672-9020	codonnell@conlantire.com	N/A
CONLAN TIRE	Continental/Genera	2005 NORTH WEST 110T	MIAMI	Miami-dade	33172	(305) 455-1295	fmarino@conlantire.com	N/A
CONLAN TIRE	Continental/Genera	10066 GENERAL DR	ORLANDO	Orange	32824	(407) 216-3999	hitani@conlantire.com	N/A
DAN CALLAGHAN ENTERPRISES	Continental/Genera	2203 ALICIA STREET	FORT MYERS	Lee	33901	(239) 334-0105	ftmyers@callaghantire.com	N/A
DAN CALLAGHAN ENTERPRISES INC	Continental/Genera	211 SW 33RD AVE	OCALA	Marion	34475	(352) 873-9005	ocala@callaghantire.com	N/A
DAN CALLAGHAN ENTERPRISES INC	Continental/Genera	3600 NW 54 STREET	MIAMI	Miami-dade	33142	(305) 634-7665	rjimenez@callaghantire.com	N/A
DAN CALLAGHAN ENTERPRISES INC	Continental/Genera	3035 E MAIN ST	LAKELAND	Polk	33801	(863) 665-9336	chare@callaghantire.com	N/A
DAN CALLAGHAN ENTERPRISES INC	Continental/Genera	1511 38TH AVE E	BRADENTON	Manatee	34208	(941) 746-6188	bradenton@callaghantire.com	N/A
DAN CALLAGHAN ENTERPRISES INC	Continental/Genera	6425 CAUSEWAY BLVD	TAMPA	Hillsborough	33619	(813) 630-0039	tampa@callaghantire.com	N/A
DAN CALLAGHAN ENTERPRISES INC	Continental/Genera	4421 12TH STREET CT	BRADENTON	Manatee	34203	(941) 746-6188	pvirgilio@callaghantire.com	N/A
DAN CALLAGHAN ENTERPRISES INC	Continental/Genera	11940 44TH ST NORTH	CLEARWATER	Pinellas	33762	(727) 571-3358	clearwater@callaghantire.com	N/A
DAN CALLAGHAN ENTERPRISES INC	Continental/Genera	5791 TAYLORS RD	NAPLES	Collier	34109	(941) 592-0003	ftmcaltire@aol.com	N/A
DAN CALLAGHAN ENTERPRISES INC	Continental/Genera	300 WEST 10TH ST	West Palm Beach	Palm Beach	33404	(561) 845-2875		N/A

Internal

DAN CALLAGHAN ENTERPRISES INC	Continental/Genera	36115 15TH STREET EA	BRADENTON	Manatee	34208	(941) 747-5792		N/A
DAY'S TIRE & SERVICE CTR, INC	Continental/Genera	PO BOX 567/2510 S FE	CRESTVIEW	Okaloosa	32536	(850) 682 6733		N/A
DECOSTA AUTOMOTIVE & DIESEL R	Continental/Genera	161 SEBASTIAN BLVD S	SEBASTIAN	Indian River	32958	(772) 589-5510		N/A
DORAL AUTO CARE	Continental/Genera	5721 NW 36TH ST	MIAMI	Miami-dade	33166	(305) 871-1121		N/A
EARL W COLVARD INC	Continental/Genera	510 SOUTH COMBEE ROA	LAKELAND	Polk	33801	(863) 682-5171	jmiller@boulevardtire.com	N/A
EARL W. COLVARD, INC	Continental/Genera	5105 SW 41ST BLVD	GAINESVILLE	Alachua	32608	(352) 371-6209	acoughlin@boulevardtire.com	N/A
FAMILY TIRE DISTRIBUTORS, INC	Continental/Genera	2817 PEMBROKE RD.	HOLLYWOOD	Broward	33020	(954) 922 8473		N/A
FRED JONES ENTERPRISES LLC	Continental/Genera	7576 BROKERAGE DRIVE	ORLANDO	Orange	32809	(407) 251-5329		N/A
GCR #450	Continental/Genera	7800 PITTMAN AVENUE	PENSACOLA	Escambia	32534	(800) 769-8302	jackiesteadham@gcrtires.com	N/A
GCR #454	Continental/Genera	4741 LARADO AVE	FORT MYERS	Lee	33905	(239) 334-8229	eve.doston@gcrtires.com	N/A
GCR #457	Continental/Genera	20 N ORANGE BLOSSOM	ORLANDO	Orange	32805	(407) 426-8666	bethotworth@gcrtires.com	N/A
GCR #459	Continental/Genera	4702 CAPITAL CIRCLE	TALLAHASSEE	Leon	32303	(850) 222-3130	lamonte.moye@gcrtires.com	N/A
GCR #460	Continental/Genera	6310 ADAMO DR	TAMPA	Hillsborough	33619	(813) 623-1596	danspencer@gcrtires.com	N/A
GCR OCALA	Continental/Genera	1419 SOUTHWEST 12TH	OCALA	Marion	34474	(352) 732-5200	jocenekoontz@gcrtires.com	N/A
GCR TIRE CENTER #453	Continental/Genera	625 W. MAIN ST	BARTOW	Polk	33830	(863) 533-0368	kelli.scott@gcrtires.com	N/A
GCR TIRE CENTER #458	Continental/Genera	2964 63RD AVE. EAST	BRADENTON	Manatee	34203	(941) 739-7704	rick.vandecarr@gcrtires.com	N/A
GCR TIRE CENTERS #451	Continental/Genera	7500 COMMONWEALTH AV	JACKSONVILLE	Duval	32220	(904) 786-8550	dennissauer@gcrtires.com	N/A
George's Wholesale Tire	Continental/Genera	8230 US 19 NORTH	PORT RICHEY	Pasco	34668	(727) 817-0905	gtire12@tampabay.rr.com	N/A
ISLAND TIRE OF THE FLORIDA KE	Continental/Genera	1326 107TH ST GULF	MARATHON	Monroe	33050	(305) 743-8755		N/A
JERRY'S ACTION AUTO REPAIR, I	Continental/Genera	688 SOUTH PATRICK DR	SATELLITE BEACH	Brevard	32937	(321) 777-3888		N/A
LAKE TIRE AND AUTO	Continental/Genera	812 BURLEIGH BLVD	TAVARES	Lake	32778	(352) 343-0041	tireman922@gmail.com	N/A
MARTINO TIRE CO	Continental/Genera	1280 SW 27TH AVE	POMPANO BEACH	Broward	33069	9549704600	pompano@martinotire.com	N/A
MARTINO TIRE CO	Continental/Genera	6251 MARTINO TIRE LA	FORT MYERS	Lee	33912	(239) 337-5555	fortmyers@martinotire.com	N/A
MARTINO TIRE CO	Continental/Genera	3033 JACKSON BLUFF R	TALLAHASSEE	Leon	32304	(850) 576-1278	ajdominguez@martinotire.com	N/A
MARTINO TIRE CO	Continental/Genera	11380 NW 34TH ST	MIAMI	Miami-dade	33178	(305) 591-1238	jhernandez@martinotire.com	N/A
MARTINO TIRE CO	Continental/Genera	831 BILL FRANCE BLVD	DAYTONA BEACH	Volusia	32117	(386) 274-1776	gswindell@martinotire.com	N/A
MARTINO TIRE CO	Continental/Genera	8314 E ADAMO DRIVE	TAMPA	Hillsborough	33619	(813) 626-5454	rgreene@martinotire.com	N/A
MCGEE TIRE STORES, INC. #1368	Continental/Genera	3939 US 98 SOUTH	LAKELAND	Polk	33812	(863) 667-3702		N/A
MIAMI TIRESOLES	Continental/Genera	7800 N W 103RD ST	HIALEAH GARDENS	Miami-dade	33016	(305) 821 2121		N/A
MILLER BROTHERS GIANT TIRE	Continental/Genera	14811 N 12TH STREET	LUTZ	Hillsborough	33549	(813) 975-8400	mbgts.tampa@verizon.net	N/A
MILLER BROTHERS GIANT TIRE	Continental/Genera	4971 SW 34TH PLACE	DAVIE	Broward	33314	(904) 268 8797	mirna.rojas@mbgts.net	N/A
MILLER BROTHERS GIANT TIRE	Continental/Genera	10340 CAMP MINE ROAD	BROOKSVILLE	Hernando	34601	(904) 268 8798		N/A
MILLER BROTHERS JACKSONVILLE	Continental/Genera	11608 COLUMBIA PARK	JACKSONVILLE	Duval	32258	(904) 268 8799	newdiger@bellsouth.net	N/A
MITCH'S TIRE & AUTO	Continental/Genera	1310 NE PINE ISLAND	CAPE CORAL	Lee	33909	(239) 242-4311		N/A
MUFFLERMAN OF CAPE CORAL	Continental/Genera	1929 DEL PRADO BLVD	CAPE CORAL	Lee	33990	(239) 829-0495		N/A

Internal

PALM BEACH TIRE INC	Continental/Genera	1360 HYPOLUXO ROAD	LANTANA	Palm Beach	33462	(561) 547-0408	JOSEV.BONILLA1@HOTMAIL.COM	N/A
RAY'S TIRE & SERVICE	Continental/Genera	1375 US HIGHWAY 1 SO	SAINT AUGUSTINE	Saint Johns	32084	(904) 829-6418		N/A
ROADMART OF FLORIDA	Continental/Genera	2413 HIGHWAY 77	LYNN HAVEN	Bay	32444	(850) 265-9401		N/A
Shepherd's Tire Service, Inc.	Continental/Genera	3949 14TH STREET	BRADENTON	Manatee	34205	(941) 746-7885	sheptire9356@msn.com	N/A
SOUTH DADE	Continental/Genera	1201 OLD HOPEWELL BL	TAMPA	Hillsborough	33619	(813) 868-4400	al@sdatire.com	N/A
SOUTH DADE AUTOMOTIVE INC	Continental/Genera	10850 LEE VISTA BLVD	ORLANDO	Orange	32829	(305) 639-6080		N/A
SOUTHERN TIRE COMPANY	Continental/Genera	3218 S MACDILL AVE	TAMPA	Hillsborough	33629	(813) 839-7320		N/A
SOUTHERN TIRE MART #94	Continental/Genera	285 SAND MINE ROAD	MOSSY HEAD	Walton	32434	(850) 951-2180	stm94@stmtires.com	N/A
SOUTHERN TIRE MART #95	Continental/Genera	309 GREEN ACRES ROAD	FORT WALTON BEACH	Okaloosa	32547	(850) 226-7233	stm95@stmtires.com	N/A
SOUTHERN TIRE MART #96	Continental/Genera	7528 PENNY ROAD	PANAMA CITY	Bay	32407	(850) 914 0092	sschriever@stmtires.com	N/A
THE TIRE MAN, INC	Continental/Genera	1109 WEST MAIN STREE	AVON PARK	Highlands	33825	(863) 453-4050		N/A
TIRE HUT INC	Continental/Genera	1250 WEST SUNRISE BL	FORT LAUDERDALE	Broward	33311	(954) 764-1582		N/A
TIRE KINGDOM #011	Continental/Genera	229 HWY 27 NORTH	CLERMONT	Lake	34714	(352) 241-6594		N/A
TIRE KINGDOM #036	Continental/Genera	2760 SW BRIGANTINE P	PORT SAINT LUCIE	Saint Lucie	34984	(772) 345-2860		N/A
TIRE KINGDOM #074	Continental/Genera	19850 NW 27TH AVENUE	MIAMI GARDENS	Miami-dade	33056	(305) 624-6877		N/A
TIRE KINGDOM #075	Continental/Genera	5317 POWERLINE RD	FORT LAUDERDALE	Broward	33309	(954) 491-3810		N/A
TIRE KINGDOM #091	Continental/Genera	1760 N JOG ROAD SUIT	WEST PALM BEACH	Palm Beach	33401	(561) 697-5043		N/A
TIRE KINGDOM #113	Continental/Genera	1210 OAKLEY SEAVER D	CLERMONT	Lake	34711	(352) 241-8185		N/A
TIRE KINGDOM #216	Continental/Genera	3551 13TH STREET	SAINT CLOUD	Osceola	34769	(407) 892-2325		N/A
TIRE KINGDOM #264	Continental/Genera	7390 52ND PLACE	BRADENTON	Manatee	34203	(941) 755-6755		N/A
TIRE KINGDOM #28	Continental/Genera	2615 UNIVERSITY PARK	SARASOTA	Manatee	34243	(941) 755-6756		N/A
TIRE KINGDOM INC	Continental/Genera	13760 W STATE ROAD 8	DAVIE	Broward	33325	(954) 370-1140		N/A
TIRE KINGDOM INC #6014	Continental/Genera	5151 TYLERLAKES BLV	WEST PALM BEACH	Palm Beach	33401	(561) 615-3633		N/A
TIRESOLES OF BROWARD INC	Continental/Genera	6101 ORANGE AVENUE	FORT PIERCE	Saint Lucie	34947	(772) 464-4211		N/A
TIRESOLES OF BROWARD INC - DEERFIELD BEACH	Continental/Genera	1865 S. POWERLINE ROAD	DEERFIELD BEACH	Broward	33442	(954) 354-8489		N/A
TIRESOLES OF BROWARD INCDBA LAKE WORTH 402	Continental/Genera	402 RINKER WAY	LAKE WORTH	Palm Beach	33461	(561) 588-2777	elpex@cs.com	N/A
TIRESOLES OF JACKSONVILLE LLC	Continental/Genera	1475 PICKETTEVILLE R	JACKSONVILLE	Duval	32220	(904) 378-0090	jfiedler904@msn.com	N/A
TROTTA TIRES II, LLC	Continental/Genera	1919 NW 19 STREET #2	FORT LAUDERDALE	Broward	33311	(954) 760-7276		N/A
VANNOY'S TIRES, INC (NINE MIL	Continental/Genera	126 E NINE MILE RD	PENSACOLA	Escambia	32534	(850) 476-2507		N/A
YARBROUGH TIRE SERVICE INC	Continental/Genera	2306 S. HIGHLANDS AV	SEBRING	Highlands	33870	(863) 385-1574		N/A
Balado National Tire	Continental/Genera	1633 NW 27th Ave	Miami		33125	(305) 635-9001	alyssa@balado.com	N/A
Balado National Tire	Continental/Genera	6779 SW 8th Street	Miami		33144	(305) 261-9723	alyssa@balado.com	N/A

Internal

FSA TIRE CONTRACT: FSA25-TRS27.0

TIRE MANUFACTURER AUTHORIZED SALES AND SERVICE CENTERS

MANUFACTURER NAME: ___Michelin North America, Inc._____
MANUFACTURER FEIN #: _11-1724631_____

Manufacturer Authorized Sales & Service Center Name	Tire Brands	Street Address	City	County	Zip Code	Telephone #	E-Mail To Accept Purchase Orders	MWBE Status (if available) Y = MWBE
A.O.K Tire Mart	Michelin, BFG, Unir	200 W Main St.	Apopka	Orange	32703	407 889-7074	jimm.aoktiremart@gmail.com	
Layes Tire Service	Michelin, BFG, Unir	1092 Locke St	Avon Park	Highlands	33825	863 453-3333	mlaye@layestire.com	
Boulevard Tire Center	Michelin, BFG, Unir	9965 SE 58th Ave	Belleview	Marion	34420	353 245-7017	awilliams@boulevardtire.com	
Callaghan Auto Service Center	Michelin, BFG, Unir	3615 15th Street East	Bradenton	Manatee	34208	941 747-6189	jgregor@callaghantire.com	
Callaghan Tire	Michelin, BFG, Unir	1511 38TH AVE E	Bradenton	Manatee	34208	941 476-6188	cmangipinto@callaghantire.com	
Miller Bros. Giant Tire Service	Michelin, BFG, Unir	10340 Camp Mine Rd	Brooksville	Hernando	34601	352 797-9205	derek.roberts@mbgts.net	
Boulevard Tire Center	Michelin, BFG, Unir	201 N State St	Bunnell	Flagler	32110	386-586-6088	sshead@boulevardtire.com	
Callaghan Tire	Michelin, BFG, Unir	11940 44th St. N	Clearwater	Pinellas	33762	727 571-3358	clearwater@callaghantire.com	
Boulevard Tire Center	Michelin, BFG, Unir	1609 N Cocoa Blvd.	Cocoa	Brevard	32922	321 639-3077	info@boulevardtire.com	
McGee Commercial Tire & Services	Michelin, BFG, Unir	3040 S Hwy 95A	Contonment	Escambia	32533	850 474-1718	pensacola@mcgeetire.com	
Miller Bros. Giant Tire Service	Michelin, BFG, Unir	4971 SW 34th Place	Davie	Broward	33314	954 321-1755	mirna.rojas@mbgts.net	
Snider Tire	Michelin, BFG, Unir	3400 Burris Rd.	Davie	Broward	33314	954 585-8525	sestraza@sniderfleet.com	
Boulevard Tire Center	Michelin, BFG, Unir	800 S Nova Rd	Daytona Beach	Volusia	32114	386 258-8129	info@boulevardtire.com	
McGee Commercial Tire & Services	Michelin, BFG, Unir	148 N Ridgewood Ave	Daytona Beach	Volusia	32114	386 252-7661	daytona@mcgeetire.com	
National Tire Brokers	Michelin, BFG, Unir	829 Hwy 90 W	De Funiak Springs	Walton	32433	850 892-5191	jeffntbc@gdsys.net	
Boulevard Tire Center	Michelin, BFG, Unir	1205 Biscayne Blvd	DeLand	Volusia	32724	386 740-0279	info@boulevardtire.com	
Boulevard Tire Center	Michelin, BFG, Unir	816 S Woodland Blvd.	DeLand	Volusia	32720	386 734-6447	llanders@boulevardtire.com	
McGee Commercial Tire & Services	Michelin, BFG, Unir	28919 US Hwy 27	Dundee	Polk	33838	863 439-8473	shop1367@monroestores.com	
Boulevard Tire Center	Michelin, BFG, Unir	4201 S State Rd 7	Fort Lauderdale	Broward	33314	954 792-7799	info@boulevardtire.com	
Boulevard Tire Center	Michelin, BFG, Unir	4201 South State Road #7	Fort Lauderdale	Broward	33314	954 792-7799	info@boulevardtire.com	
Dale's Wheels & Tires	Michelin, BFG, Unir	250 W Sunrise Blvd.	Fort Lauderdale	Broward	33311	954 764-1582	brooksalicia2@gmail.com	
Boulevard Tire Center	Michelin, BFG, Unir	7051 Alico Rd.	Fort Myers	Lee	33912	239 267-4701	info@boulevardtire.com	
Callaghan Tire	Michelin, BFG, Unir	2203 Alicia St.	Fort Myers	Lee	33901	239 334-0105	ftmyers@callaghantire.com	
McGee Commercial Tire & Services	Michelin, BFG, Unir	5960 Country Lakes Dr	Fort Myers	Lee	33905	239 362-3025	ftmyers@mcgeetire.com	
Snider Tire	Michelin, BFG, Unir	5321 Dr Martin Luther King	Fort Myers	Lee	33905	239 334-7100	dlawrence@sniderfleet.com	
Boulevard Tire Center	Michelin, BFG, Unir	2750 S Kings Hwy	Fort Pierce	St. Lucie	34945	772 489-8473	info@boulevardtire.com	
St Lucie Battery & Tire Company	Michelin, BFG, Unir	317 Orange Ave	Fort Pierce	St. Lucie	34950	772 489-3977	bfulford@slbt.com	
St Lucie Battery & Tire Company	Michelin, BFG, Unir	5500 ORANGE AVE	Fort Pierce	St. Lucie	34947	772 461-1746	jfarley@slbt.com	
Advanced Tire Service	Michelin, BFG, Unir	912 N Main St	Gainesville	Alachua	32601	352 559-0708	jguinn@advancedtireservicefl.com	
Boulevard Tire Center	Michelin, BFG, Unir	5105 SW 41st Blvd	Gainesville	Alachua	32608	352 371-6209	info@boulevardtire.com	
Dales Tire	Michelin, BFG, Unir	2928 NE 21st Way	Gainesville	Alachua	32609	352 538-6300	dalestirejh@gmail.com	
Double D Auto Center (North Florida T	Michelin, BFG, Unir	551894 US Highway 1	HILLIARD	Nassau	32046	904 845-3357	doubledautocenter@yahoo.com	
St Lucie Battery & Tire Company	Michelin, BFG, Unir	11050 SE FEDERAL HWY	HOBE SOUND	Martin	33455	772 546-0999	ccopus@slbt.com	
Mike's A.O.K. Tire & Auto Repair	Michelin, BFG, Unir	135A Tomahawk Dr	Indian Harbour Beach	Brevard	32937	321 779-8473	bossman350ss@aolcom	
Advantage Commercial Tire & Service	Michelin, BFG, Unir	10418 New Berlin Rd, Unit 1	Jacksonville	Duval	32226	904 379-9045	j.henderson@advantagetrucktire.com	
Advantage Commercial Tire & Service	Michelin, BFG, Unir	2981 Strickland St	Jacksonville	Duval	32254	904 333-3589	sshiver@advantagetrucktire.com	
Boulevard Tire Center	Michelin, BFG, Unir	570 Henderson Rd	Jacksonville	Duval	32254	904 786-8512	info@boulevardtire.com	
Boulevard Tire Center	Michelin, BFG, Unir	828 Edgewood Ave N	Jacksonville	Duval	32254	904 388-5457	info@boulevardtire.com	
Callaghan Tire	Michelin, BFG, Unir	7075 12th St W	Jacksonville	Duval	32220	904 693-4999	wowens@callaghantire.com	

Snider Tire	Michelin, BFG, Unir	2550 W Beaver St	Jacksonville	Duval	32254	904 389-0255	jhensley@sniderfleet.com	
Snider Tire	Michelin, BFG, Unir	718 Lane Ave N	Jacksonville	Duval	32254	904 674-2941	jthompson@sniderfleet.com	
Southern Tire & Fleet Service	Michelin, BFG, Unir	5919-4 Commonwealth Ave	Jacksonville	Duval	32254	904-547-0874	parkermichael84@gmail.com	
St Lucie Battery & Tire Company	Michelin, BFG, Unir	1650 NE Jensen Beach Blvd	Jensen Beach	Martin	34957	772 334-1555	msanchez@slbt.com	
Boulevard Tire Center	Michelin, BFG, Unir	418 US-441	Lady Lake	Lake	32159	352 430-2380	tcolon@boulevardtire.com	
Boulevard Tire Center	Michelin, BFG, Unir	30938 Hwy 27	Lake Hamilton	Lake	33851	863 439-3608	info@boulevardtire.com	
Boulevard Tire Center	Michelin, BFG, Unir	910 US Hwy 27 NBOX C	Lake Hamilton	Lake	33851	863 439-3608	ebennett@boulevardtire.com	
Boulevard Tire Center	Michelin, BFG, Unir	510 South Combee Rd	Lakeland	Polk	33801	863 682-5171	info@boulevardtire.com	
Callaghan Tire	Michelin, BFG, Unir	3035 E. Main St.	Lakeland	Polk	33801	863 665-9336	lakeland@callaghantire.com	
McGee Commercial Tire & Services	Michelin, BFG, Unir	3939 US Hwy 98 South	Lakeland	Polk	33812	863 667-3347	98south@mcgeetire.com	
BARNETT TIRE SERVICE, INC. (TAD)	Michelin, BFG, Unir	605 W. N BLVD	LEESBURG	Lake	34748	352 787-5453	rbarnett1978@gmail.com	
Miller Bros. Giant Tire Service	Michelin, BFG, Unir	14811 N 12th St.	Lutz	Hillsborough	33549	813 975-8400	david.cole@mbgts.net	
Marathon Tire, Lube & More	Michelin, BFG, Unir	12300 Overseas Hwy	Marathon	Monroe	33050	305 289-9992	sales@marathontireandauto.com	
Boulevard Tire Center	Michelin, BFG, Unir	3850 NW 30TH Ave	Miami	Miami-dade	33142	305 635-8116	jrodriguez@boulevardtire.com	
Callaghan Tire	Michelin, BFG, Unir	3600 NW 54th St.	Miami	Miami-dade	33142	305 634-7665	miami@callaghantire.com	
Boulevard Tire Center	Michelin, BFG, Unir	4801 N Highway 19A	Mount Dora	Lake	32757	352 357-4040	mrosenberg@boulevardtire.com	
Snider Tire	Michelin, BFG, Unir	2015 ST RD 37 S	Mulberry	Polk	33860	863 425-3053	ccooper@sniderfleet.com	
Callaghan Tire	Michelin, BFG, Unir	5791 Taylor Rd.	Naples	Collier	34109	239 592-0003	naples@callaghantire.com	
Olin Mott Tire	Michelin, BFG, Unir	10103 N Florida Ave	North Tampa	Hillsborough	33612	813 935-3154	florida@olinmott.com	
Advanced Tire Service	Michelin, BFG, Unir	2199 NW 10th St	Ocala	Marion	34475	352 236-8825	jguinn@advancedtireservicefl.com	
Advanced Tire Service	Michelin, BFG, Unir	2418 E Silver Springs Blvd	Ocala	Marion	34470	352 236-8825	jguinn@advancedtireservicefl.com	
Callaghan Tire	Michelin, BFG, Unir	211 SW 33rd Ave	Ocala	Marion	34474	352 873-9005	ocala@callaghantire.com	
Snider Tire	Michelin, BFG, Unir	443 SW 54th CT	Ocala	Marion	34474	352 229-8338	jbeavers@sniderfleet.com	
St Lucie Battery & Tire Company	Michelin, BFG, Unir	198 US Highway 98 N	Okeechobee	Okeechobee	34972	863 357-2431	cjboone@slbt.com	
Boulevard Tire Center	Michelin, BFG, Unir	2788 Enterprise Rd	Orange City	Volusia	32763	386 774-9291	bsirabella@boulevardtire.com	
All-Starz Tire & Automotive	Michelin, BFG, Unir	238 Blanding Blvd	Orange Park	Clay	32703	904 579-3041	allstarztire@yahoo.com	
Action Gator Tire	Michelin, BFG, Unir	333 Thorpe Rd	Orlando	Orange	32824	407 816-8143	info@actiongatortire.com	
Boulevard Tire Center	Michelin, BFG, Unir	8210 S Orange Ave	Orlando	Orange	32809	407 240-1072	info@actiongatortire.com	
Miller Bros. Giant Tire Service	Michelin, BFG, Unir	925 Lancaster Rd	Orlando	Orange	32809	407 855-9621	tom.proctor@mgts.net	
Snider Tire	Michelin, BFG, Unir	9831 S Orange Ave	Orlando	Orange	32824	407 855-9111	lgray@sniderfleet.com	
Boulevard Tire Center	Michelin, BFG, Unir	330 West Granada Blvd	Ormond Beach	Volusia	32174	386 672-2251	elee@blulevardtire.com	
Toby's Alignment	Michelin, BFG, Unir	2604 Peters St	Palatka	Putnam	32177	386 328-5490	tobysa@bellsouth.net	
Boulevard Tire Center	Michelin, BFG, Unir	3680 S Nova Rd	Port Orange	Volusia	32129	386 898-0223	rcox@boulevardtire.com	
St Lucie Battery & Tire Company	Michelin, BFG, Unir	1888 SW Bayshore Blvd	Port Saint Lucie	St. Lucie	34984	772 807-5544	dwarner@slbt.com	
St Lucie Battery & Tire Company	Michelin, BFG, Unir	2155 SW Gatlin Blvd	Port Saint Lucie	St. Lucie	34953	772 293-0664	websales@slbt.com	
Boulevard Tire Center	Michelin, BFG, Unir	5178 Duncan Rd	Punta Gorda	Charlotte	33982	941 639-7788	info@boulevardtire.com	
Boulevard Tire Center	Michelin, BFG, Unir	424 W 13TH St	Riviera Beach	Palm Beach	33404	561 842-4332	info@boulevardtire.com	
Callaghan Tire	Michelin, BFG, Unir	891 W 13TH St	Riviera Beach	Palm Beach	33404	561 845-2875	jfarrell@callaghantire.com	
D & W Tires Direct	Michelin, BFG, Unir	1411 W 13th St, Unit 104 B	Riviera Beach	Palm Beach	33404	561-766-2543	tinatires@gmail.com	Yes
A.O.K Tire Mart	Michelin, BFG, Unir	1215 S French Ave	Sanford	Seminole	32772	407 330-3588	sales@aoktiremart.fdn.com	
St Lucie Battery & Tire Company	Michelin, BFG, Unir	1647 US #1	Sebastian	Indian River	32958	772 581-0605	ebrock@slbt.com	
Yarbrough Tire Service	Michelin, BFG, Unir	2306 S Highlands	Sebring	Highlands	33870	863 385-1574	dyaya@embarq.com	
St Lucie Battery & Tire Company	Michelin, BFG, Unir	4455 SE Cove Rd	Stuart	Martin	34997	772 872-7375	fmartinez@slbt.com	
Advantage Commercial Tire & Service	Michelin, BFG, Unir	4329 W Pensacola St	Tallahassee	Leon	32304	850 290-2690	jeff@advantagetrucktires.com	
Neece Truck Tire Center	Michelin, BFG, Unir	4792 Blountstown Hwy	Tallahassee	Leon	32304	850 574-4100	neecetire@msn.com	
Boulevard Tire Center	Michelin, BFG, Unir	6815 E Adamo Dr	Tampa	Hillsborough	33619	813 621-5445	info@boulevardtire.com	
Callaghan Tire	Michelin, BFG, Unir	6425 Causeway Blvd	Tampa	Hillsborough	33619	813 630-0039	tampa@callaghantire.com	
McGee Commercial Tire & Services	Michelin, BFG, Unir	6204 E. Hillsborough Ave	Tampa	Hillsborough	33610	813 623-5600	tpatruck@mcgeetire.com	
Olin Mott Tire	Michelin, BFG, Unir	2009 W Kennedy Blvd	Tampa	Hillsborough	33606	813 253-3183	kennedy@olinmott.com	
Olin Mott Tire	Michelin, BFG, Unir	3741 E. Hillsborough Ave.	Tampa	Hillsborough	33610	813 237-3945	hillsborough@olinmott.com	

Snider Tire	Michelin, BFG, Unir	811 N 50th St	Tampa	Hillsborough	33619	813 248-0062	mvanname@sniderfleet.com	
Lake Tire & Auto	Michelin, BFG, Unir	812 W Burleigh Blvd	Tavares	Lake	32778	352 343-0041	quotes.laketire@comcast.net	
Olin Mott Tire	Michelin, BFG, Unir	8850 N 56th St	Temple Terrace	Hillsborough	33617	813 980-0220	temple@olinmott.com	
St Lucie Battery & Tire Company	Michelin, BFG, Unir	1893 90th Ave	Vero Beach	Indian River	32966	772 569-7629	websales@slbt.com	
Snider Tire	Michelin, BFG, Unir	230 73Rd Terr N	West Palm Beach	Palm Beach	33413	561 792-3900	ghawkins@sniderfleet.com	
St Lucie Battery & Tire Company	Michelin, BFG, Unir	7071 N Military Trl	West Palm Beach	Palm Beach	33410	561 844-5505	droberts@slbt.com	
Snider Tire	Michelin, BFG, Unir	740 S. Industry Rd.	Cocoa	Brevard	32926	321 576 9580	mharmon@sniderfleet.com	
Heavy Duty Tire	Michelin	8470 Belvedere Rd.	West Palm Beach	Palm Beach	33411	561-383-2867	Accounting@HeavyDutyTires.Com	
Central Florida Tire Terminal, Inc.	Michelin, BFG, Unir	2400 US Hwy 27 S	Avon Park	Highlands	33825	863-453-2030	ken@centralfloridatireterminal.com	
Howell truck and giant tire service inc	michelin,bf goodrid	9890 n pensacola blvd	pensacola	escambia,	32534	850-476-7026	office@davehowelltires.com	woman owned

FSA TIRE CONTRACT: FSA25-TRS27.0

TIRE MANUFACTURER AUTHORIZED SALES AND SERVICE CENTERS

MANUFACTURER NAME: _____Sumitomo Rubber DBA Falken Tire_____
MANUFACTURER FEIN #: ____95-4204189_____

Manufacturer Authorized Sales & Service Center Name	Tire Brands	Street Address	City	County	Zip Code	Telephone #	E-Mail To Accept Purchase Orders	MWBE Status (if available) Y = MWBE
Callaghan Tire	Falken	1511 38th Ave	Bradenton	Manatee	34208	941.448.6954	gkortzendorf@callaghantire.com	
Callaghan Tire	Falken	11940 44th St N	Clearwater	Pinellas	33762	863.581.6958	rbyrd@callaghantire.com	
Callaghan Tire	Falken	2203 Alicia St	Ft Myers	Lee	33901	941.448.6954	gkortzendorf@callaghantire.com	
Callaghan Tire	Falken	7075 W 12 St	Jacksonville	Duvall	29506	904.237.6617	wowens@callaghantire.com	
Callaghan Tire	Falken	3035 E Main St	Lakeland	Polk	33801	863.581.6958	rbyrd@callaghantire.com	
Callaghan Tire	Falken	3600 NW 54th St	Miami	Miami Dade	29501	561.707.3594	lcarmenini@callaghantire.com	
Callaghan Tire	Falken	5791 Taylor Road	Naples	Collier	34109	941.448.6954	gkortzendorf@callaghantire.com	
Callaghan Tire	Falken	211 SW 33rd Ave	Ocala	Marion	34474	904.237.6617	wowens@callaghantire.com	
Callaghan Tire	Falken	891 W 13th St	Riviera Beach	Palm Beach	33404	561.707.3594	lcarmenini@callaghantire.com	
Callaghan Tire	Falken	6425 Causeway Blvd	Tampa	Hillsborough	33619	863.581.6958	rbyrd@callaghantire.com	
AOK Tire Mart	Falken	1215 S French Ave	Sanford	Seminole	32772	407.330.3588	vlgir@aol.com	
AOK Tire Mart	Falken	200 W Main St	Apopka	Orange	32703	407.889.7074	josh@aoktiremart.com	
Central Tire Corp	Falken	8275 NW 74th St	Miami	Miami Dade	33166	305.592.7564	centraltire@yahoo.com	
Central Tire Corp	Falken	2801 S Andrew Ave	Ft Lauderdale	Broward	33316	954.990.2434	centraltire@yahoo.com	
Falcon Tire Center	Falken	12930 NW S River Drive	Medley	Miami Dade	33178	305.883.8393	info@falcontiremiami.com	
Falcon Tire Center	Falken	7219 E Broadway Ave	Tampa	Hillsborough	33619	813.635.9408	info@falcontiretampa.com	
Falcon Tire Center	Falken	33 Lane Ave S	Jacksonville	Duvall	32254	904.695.8885	info@falcontirejacksonville.com	
Falcon Tire Center	Falken	5292 South West 1st Lane	Ocala	Marion	34474	407.922.4411	hg@falcontireocala.com	
St Lucie Battery & Tire	Falken	1888 SWBayshore Blvd	Port St Lucie	St Lucie	34984	866.779.5013	grussell@slbtsafefleet.com	
St Lucie Battery & Tire	Falken	2165 SW Gatlin Blvd	Port St Lucie	St Lucie	34953	866.779.5013	grussell@slbtsafefleet.com	
St Lucie Battery & Tire	Falken	10672 S Federal Hwy 1	Port St Lucie	St Lucie	34952	866.779.5013	grussell@slbtsafefleet.com	
St Lucie Battery & Tire	Falken	6911 Hancock Drive	Port St Lucie	St Lucie	34952	866.779.5013	grussell@slbtsafefleet.com	
St Lucie Battery & Tire	Falken	1650 Jensen Beach Blvd	Jenson Beach	Martin	34957	866.779.5013	grussell@slbtsafefleet.com	
St Lucie Battery & Tire	Falken	3992 SW Bruner Terrace	Palm City	Martin	34990	866.779.5013	grussell@slbtsafefleet.com	
St Lucie Battery & Tire	Falken	3602 Oleander Ave	Fort Pierce	St Lucie	34982	866.779.5013	grussell@slbtsafefleet.com	
St Lucie Battery & Tire	Falken	317 Orange Ave	Fort Pierce	St Lucie	34950	866.779.5013	grussell@slbtsafefleet.com	
St Lucie Battery & Tire	Falken	5500 Orange Ave	Fort Pierce	St Lucie	34947	866.779.5013	grussell@slbtsafefleet.com	
St Lucie Battery & Tire	Falken	16087 SW Warfield Blvd	Indiantown	Martin	34956	866.779.5013	grussell@slbtsafefleet.com	
St Lucie Battery & Tire	Falken	11050 SE Federal Hwy	Hobe Sound	Martin	33455	866.779.5013	grussell@slbtsafefleet.com	
St Lucie Battery & Tire	Falken	270 Old Dixie Hwy	Vero Beach	Indian River	32962	866.779.5013	grussell@slbtsafefleet.com	
St Lucie Battery & Tire	Falken	1893 90th Ave	Vero Beach	Indian River	32966	866.779.5013	grussell@slbtsafefleet.com	
St Lucie Battery & Tire	Falken	198 US Hwy 98 N	Okeechobee	Okeechobee	34972	866.779.5013	grussell@slbtsafefleet.com	
St Lucie Battery & Tire	Falken	10435 US Hwy 1	Sebastian	Indian River	32958	866.779.5013	grussell@slbtsafefleet.com	
St Lucie Battery & Tire	Falken	7071 N Military Tr	West Palm Bea	Palm Beach	33410	866.779.5013	grussell@slbtsafefleet.com	

St Lucie Battery & Tire	Falken	1647 US Hwy 1	Sebastian	Indian River	32958	866.779.5013	grussell@slbtsafefleet.com

FSA TIRE CONTRACT: FSA25-TRS27.0

TIRE MANUFACTURER AUTHORIZED SALES AND SERVICE CENTERS

MANUFACTURER NAME: The Goodyear Tire & Rubber Company
MANUFACTURER FEIN #: 34-0253240

Manufacturer Authorized Sales & Service Center Name	Tire Brands	Street Address	City	County	Zip Code	Telephone #	E-Mail To Accept Purchase Orders	MWBE Status (if available) Y = MWBE
GOODYEAR AUTO SERVICE #2440	Goodyear	1211 N MAIN ST	GAINESVILLE	ALACHUA	32601	(352) 372-3537	gsr2440@goodyear.com	
GOODYEAR AUTO SERVICE #2586	Goodyear	407 NW 75TH ST	GAINESVILLE	ALACHUA	32607	(352) 332-5111	gsr2586@goodyear.com	
MAVIS TIRE EXPRESS SVCS CORP	Goodyear, Cooper	3545 W UNIVERSITY AVE	GAINESVILLE	ALACHUA	32607	(352) 244-9842	tmoran@mavistire.com	
MAVIS TIRE EXPRESS SVCS CORP	Goodyear, Cooper	14145 W NEW BERRY RD STE 101	NEWBERRY	ALACHUA	32669	(352) 332-0500	tmoran@mavistire.com	
PEP BOYS #127	Goodyear, Cooper	7725 W NEWBERRY RD	GAINESVILLE	ALACHUA	32606	(352) 332-6003	scott_grable@pepboys.com	
ADVANCED TIRE LLC	Goodyear, Cooper	912 N MAIN ST	GAINESVILLE	ALACHUA	32601	(352) 559-0708	jguinn@advancedtireservicefl.com	
GOODYEAR AUTO SERVICE #2227	Goodyear	1001 W 15TH ST	PANAMA CITY	BAY	32401	(850) 763-4651	gsr2227@goodyear.com	
PEP BOYS #122	Goodyear, Cooper	821 W 23RD ST	PANAMA CITY	BAY	32405	(850) 872-8884	scott_grable@pepboys.com	
PEP BOYS #1527	Goodyear, Cooper	161 N TYNDALL PKWY	CALLAWAY	BAY	32404	(850) 769-0261	scott_grable@pepboys.com	
PEP BOYS #1528	Goodyear, Cooper	712 W 23RD ST	PANAMA CITY	BAY	32405	(850) 763-7936	scott_grable@pepboys.com	
PEP BOYS #1529	Goodyear, Cooper	8113 FRONT BEACH RD	PANAMA CITY BEACH	BAY	32407	(850) 236-7585	scott_grable@pepboys.com	
ALFORD & ALFORD PDL LLC	Goodyear, Cooper	180 NORTH TYNDALL PARKWAY	PANAMA CITY	BAY	32404	(850) 763-7339	alfordtirecenter@gmail.com	
MAVIS TIRE EXPRESS SVCS CORP	Goodyear, Cooper	7195 DOLINA COURT	MELBOURNE	BREVARD	32940	(321) 259-8494	tmoran@mavistire.com	
MIKE GATTO INC	Goodyear, Cooper	500 A N COCOA BLVD	COCOA	BREVARD	32922	(321) 632-7500	sknockdown@aol.com	
MIKE GATTO INC	Goodyear, Cooper	2965 BUSH DR	MELBOURNE	BREVARD	32935	(321) 421-6600	sknockdown@aol.com	
MIKE GATTO INC	Goodyear, Cooper	15 W HIBISCUS BLVD	MELBOURNE	BREVARD	32901	(321) 727-3322	sknockdown@aol.com	
MIKE GATTO INC	Goodyear, Cooper	855 N COURTENAY PKWY	MERRITT ISLAND	BREVARD	32953	(321) 452-4747	sknockdown@aol.com	
MIKE GATTO INC	Goodyear, Cooper	1103 MALABAR RD	PALM BAY	BREVARD	32907	(321) 953-6008	sknockdown@aol.com	
MIKE GATTO INC	Goodyear, Cooper	7205 DOLINA COURT	VIERA	BREVARD	32940	(321) 308-2468	sknockdown@aol.com	
MONRO INC	Goodyear, Cooper	453 N HARBOUR BLVD	MELBOURNE	BREVARD	32935	(321) 751-3722	kyle.peterson@monro.com	
PEP BOYS #1610	Goodyear, Cooper	2035 PALM BAY ROAD NE	PALM BAY	BREVARD	32905	(321) 723-0280	scott_grable@pepboys.com	
PEP BOYS #1611	Goodyear, Cooper	1090 N COURTENAY PKWY	MERRITT ISLAND	BREVARD	32953	(321) 453-9583	scott_grable@pepboys.com	
PEP BOYS #1641	Goodyear, Cooper	3100 CHENEY HWY	TITUSVILLE	BREVARD	32780	(321) 268-1534	scott_grable@pepboys.com	
GOODYEAR AUTO SERVICE #2544	Goodyear	2825 HOLLYWOOD BLVD	HOLLYWOOD	BROWARD	33020	(954) 923-6521	gsr2544@goodyear.com	
GOODYEAR AUTO SERVICE #6622	Goodyear	4699 SW VOLUNTEER RD	SOUTHWEST RANCHES	BROWARD	33330	(954) 434-2370	gsr6622@goodyear.com	
GOODYEAR AUTO SERVICE #6623	Goodyear	300 NW 172ND AVE	PEMBROKE PINES	BROWARD	33029	(954) 436-3661	gsr6623@goodyear.com	
GOODYEAR AUTO SERVICE #6647	Goodyear	497 S STATE ROAD 7	HOLLYWOOD	BROWARD	33023	(954) 987-0450	gsr6647@goodyear.com	
GOODYEAR AUTO SERVICE #6661	Goodyear	2101 S HIATUS RD	MIRAMAR	BROWARD	33025	(954) 450-4984	gsr6661@goodyear.com	
GOODYEAR AUTO SERVICE #6663	Goodyear	8301 PINES BLVD	PEMBROKE PINES	BROWARD	33024	(954) 435-1383	gsr6663@goodyear.com	
GOODYEAR COMMERCIAL TIRE & SVC	Goodyear, Cooper	901 NW 31ST AVE	LAUDERHILL	BROWARD	33311	(954) 583-9499	ct_location_013@goodyear.com	
MAVIS TIRE EXPRESS SVCS CORP	Goodyear, Cooper	377 S FEDERAL HIGHWAY	DEERFIELD BEACH	BROWARD	33441	(754) 233-3326	tmoran@mavistire.com	
MAVIS TIRE EXPRESS SVCS CORP	Goodyear, Cooper	3500 NORTH FEDERAL HIGHWAY	FORT LAUDERDALE	BROWARD	33308	(754) 233-4068	tmoran@mavistire.com	
MAVIS TIRE EXPRESS SVCS CORP	Goodyear, Cooper	1401 S UNIVERSITY DR	PLANTATION	BROWARD	33324	(754) 231-4806	tmoran@mavistire.com	
MAVIS TIRE EXPRESS SVCS CORP	Goodyear, Cooper	1751 NW 136TH AVE	SUNRISE	BROWARD	33323	(754) 837-8994	tmoran@mavistire.com	
MONRO INC	Goodyear, Cooper	4589 W HILLSBORO BLVD	COCONUT CREEK	BROWARD	33073	(954) 421-0444	kyle.peterson@monro.com	
MONRO INC	Goodyear, Cooper	4620 CORAL RIDGE DR	CORAL SPRINGS	BROWARD	33076	(954) 255-8522	kyle.peterson@monro.com	
MONRO INC	Goodyear, Cooper	8090 WILES ROAD	CORAL SPRINGS	BROWARD	33067	(954) 755-5584	kyle.peterson@monro.com	
MONRO INC	Goodyear, Cooper	1124 SW 101ST ROAD	DAVIE	BROWARD	33324	(954) 577-2000	kyle.peterson@monro.com	
MONRO INC	Goodyear, Cooper	1210 E COMMERCIAL BLVD	OAKLAND PARK	BROWARD	33334	(954) 332-3064	kyle.peterson@monro.com	
MONRO INC	Goodyear, Cooper	7011 NW 88TH AVENUE	TAMARAC	BROWARD	33321	(954) 721-9811	kyle.peterson@monro.com	
MONRO INC	Goodyear, Cooper	6852 N UNIVERSITY DRIVE	TAMARAC	BROWARD	33321	(954) 721-4700	kyle.peterson@monro.com	
NKE TRADING AUTOPARTS CORP	Goodyear, Cooper	15740 STATE RD 84	WESTON	BROWARD	33326	(954) 384-8473	westonauto@att.net	
ONIK & ARMEN INC	Goodyear, Cooper	440 E COPENS RD	POMPANO BEACH	BROWARD	33064	(954) 785-5493	gianttireauto@yahoo.com	
PEP BOYS #165	Goodyear, Cooper	240 COPANS RD	POMPANO BEACH	BROWARD	33064	(954) 784-7676	scott_grable@pepboys.com	
PEP BOYS #176	Goodyear, Cooper	760 S STATE ROAD 7	HOLLYWOOD	BROWARD	33023	(954) 985-9440	scott_grable@pepboys.com	
PEP BOYS #182	Goodyear, Cooper	2380 S UNIVERSITY DR	DAVIE	BROWARD	33324	(954) 476-2401	scott_grable@pepboys.com	
PEP BOYS #292	Goodyear, Cooper	2100 UNIVERSITY DR	CORAL SPRINGS	BROWARD	33071	(954) 346-4041	scott_grable@pepboys.com	
PEP BOYS #311	Goodyear, Cooper	601 SUNRISE BLVD	FT LAUDERDALE	BROWARD	33304	(954) 779-1002	scott_grable@pepboys.com	
PEP BOYS #376	Goodyear, Cooper	12251 W SUNRISE BLVD	PLANTATION	BROWARD	33323	(954) 916-9100	scott_grable@pepboys.com	
PEP BOYS #382	Goodyear, Cooper	7305 W COMMERCIAL BLVD	TAMARAC	BROWARD	33319	(954) 726-8677	scott_grable@pepboys.com	
PEP BOYS #387	Goodyear, Cooper	2721 STIRLING RD	FORT LAUDERDALE	BROWARD	33312	(954) 894-1888	scott_grable@pepboys.com	
PEP BOYS #6537	Goodyear, Cooper	4397 N PINE ISLAND RD	SUNRISE	BROWARD	33351	(954) 741-3111	scott_grable@pepboys.com	

FAMILY TIRE DIST INC	Goodyear	12606 PINES BLVD	PEMBROKE PINES	BROWARD	33027	(954) 435-0703	familytire@familytiredistributors.com	
AKRON TIRE CO INC	Goodyear, Cooper	5841 SW 45TH ST	DAVIE	BROWARD	33314	(954) 321-6618	astafford@tiresoles.com	
FAMILY TIRE DIST INC	Goodyear, Cooper	2817 PEMBROKE ROAD	HOLLYWOOD	BROWARD	33020	(954) 922-8473	familytire@familytiredistributors.com	
J & S TIRE AND AUTO INC	Goodyear, Cooper	5911 PEMBROKE ROAD	HOLLYWOOD	BROWARD	33023	(954) 989-2600	jatchiss@bellsouth.net	
KOVAC AUTOMOTIVE OF DAVIE INC	Goodyear, Cooper	2770 DAVIE RD	DAVIE	BROWARD	33314	(954) 792-7357	joeyk@kovacauto.com	
TIRE HUB LLC #105	Goodyear, Cooper	2939 NW 27TH AVE BLDG 2901	POMPANO BEACH	BROWARD	33069	(954) 977-8141	bryan.garrison@tirehub.com	
TIRESOLES OF BROWARD INC	Goodyear, Cooper	1865 S POWERLINE RD, SUITE C	DEERFIELD BEACH	BROWARD	33442	(954) 354-1810	astafford@tiresoles.com	
TIRESOLES OF BROWARD INC	Goodyear, Cooper	1865 SOUTH POWERLINE RD	DEERFIELD BEACH	BROWARD	33442	(954) 354-8489	astafford@tiresoles.com	
GOODYEAR AUTO SERVICE #6673	Goodyear	3225 S TAMIAMI TRAIL	PUNTA GORDA	CHARLOTTE	33950	(941) 639-1186	gsr6673@goodyear.com	
MAVIS TIRE EXPRESS SVCS CORP	Goodyear, Cooper	2572 TAMIAMI TRAIL	PORT CHARLOTTE	CHARLOTTE	33952	(941) 764-9815	tmoran@mavistire.com	
MONRO INC	Goodyear, Cooper	19100 VETERANS BLVD	PORT CHARLOTTE	CHARLOTTE	33948	(941) 315-5091	kyle.peterson@monro.com	
MAVIS TIRE EXPRESS SVCS CORP	Goodyear, Cooper	3775 S SUNCOAST BLVD	HOMOSASSA	CITRUS	34446	(352) 477-8028	tmoran@mavistire.com	
MAVIS TIRE EXPRESS SVCS CORP	Goodyear, Cooper	1183 N LECANTO HWY	LECANTO	CITRUS	34461	(352) 474-5559	tmoran@mavistire.com	
VP & C INC	Goodyear, Cooper	3260 N LECANTO HWY	BEVERLY HILLS	CITRUS	34465	(352) 527-1712	office@georgeswholesale.net	
GOODYEAR AUTO SERVICE #2443	Goodyear	1615 WELLS ROAD	ORANGE PARK	CLAY	32073	(904) 269-9700	gsr2443@goodyear.com	
GOODYEAR AUTO SERVICE #2444	Goodyear	1585-A ISLAND LANE	FLEMING ISLAND	CLAY	32003	(904) 215-3712	gsr2444@goodyear.com	
MAVIS TIRE EXPRESS SVCS CORP	Goodyear, Cooper	2600 BLANDING BLVD	MIDDLEBURG	CLAY	32068	(904) 693-5198	tmoran@mavistire.com	
MAVIS TIRE EXPRESS SVCS CORP	Goodyear, Cooper	706 PARK AVE	ORANGE PARK	CLAY	32073	(904) 693-5188	tmoran@mavistire.com	
MAVIS TIRE EXPRESS SVCS CORP	Goodyear, Cooper	346 BLANDING BLVD	ORANGE PARK	CLAY	32073	(904) 693-5163	tmoran@mavistire.com	
PEP BOYS #113	Goodyear, Cooper	204 BLANDING BLVD	ORANGE PARK	CLAY	32073	(904) 276-7680	scott_grable@pepboys.com	
PEP BOYS #1631	Goodyear, Cooper	1716 BLANDING BLVD.	MIDDLEBURG	CLAY	32068	(904) 406-4758	scott_grable@pepboys.com	
PEP BOYS #6625	Goodyear, Cooper	1807 EAST-WEST PARKWAY	FLEMING ISLAND	CLAY	32003	(904) 278-5252	scott_grable@pepboys.com	
U S VENTURE INC	Goodyear, Cooper	2832 ANVIL BLOCK ROAD	ELLENWOOD	CLAYTON	30294	(404) 762-4944	bdecker@usautoforce.com	
GOODYEAR AUTO SERVICE #6652	Goodyear	14275 COLLIER BLVD	NAPLES	COLLIER	34119	(239) 348-3537	gsr6652@goodyear.com	
MAVIS TIRE EXPRESS SVCS CORP	Goodyear, Cooper	7445 VANDERBILT BEACH RD	NAPLES	COLLIER	34119	(239) 304-2072	tmoran@mavistire.com	
MONRO INC	Goodyear, Cooper	13020 LINVINGTON ROAD	NAPLES	COLLIER	34105	(239) 659-0700	kyle.peterson@monro.com	
MONRO INC	Goodyear, Cooper	2800 IMMOKALEE ROAD	NAPLES	COLLIER	34110	(239) 594-0320	kyle.peterson@monro.com	
MONRO INC	Goodyear, Cooper	806 111TH AVENUE NORTH	NAPLES	COLLIER	34108	(585) 647-6400	kyle.peterson@monro.com	
MONRO INC	Goodyear, Cooper	4020 GREEN BLVD	NAPLES	COLLIER	34116	(239) 352-0001	kyle.peterson@monro.com	
MONRO INC	Goodyear, Cooper	996 CENTRAL AVENUE	NAPLES	COLLIER	34102	(239) 263-8483	kyle.peterson@monro.com	
MONRO INC	Goodyear, Cooper	4740 RADIO ROAD	NAPLES	COLLIER	34104	(239) 643-2230	kyle.peterson@monro.com	
MONRO INC	Goodyear, Cooper	6505 DUDLEY DRIVE	NAPLES	COLLIER	34105	(239) 430-2777	kyle.peterson@monro.com	
APEX FAMILY LLC	Goodyear	6220 COLLIER BLVD	NAPLES	COLLIER	34114	(239) 793-7117	david@apexautomotive.com	
COLLIER TIRES & REPAIRS INC	Goodyear, Cooper	3906 EXCHANGE AVE	NAPLES	COLLIER	34104	(239) 643-7676	wagnertire@yahoo.com	
ADVANCED TIRE LLC	Goodyear, Cooper	837 E DUVAL	LAKE CITY	COLUMBIA	32055	(386) 406-6745	jguinn@advancedtireservicefl.com	
JEDS AUTOMOTIVE & DIESEL REPAIR	Goodyear, Cooper	16776 SE HWY 19	CROSS CITY	DIXIE	32628	(352) 440-2412	jndperrone@gmail.com	
GOODYEAR AUTO SERVICE #2426	Goodyear	817 N CLAY ST	JACKSONVILLE	DUVAL	32202	(904) 598-1001	gsr2426@goodyear.com	
GOODYEAR AUTO SERVICE #2433	Goodyear	675 SKYMARKS DR	JACKSONVILLE	DUVAL	32218	(904) 714-9065	gsr2433@goodyear.com	
GOODYEAR AUTO SERVICE #2448	Goodyear	11800 SAN JOSE BLVD	JACKSONVILLE	DUVAL	32223	(904) 262-0090	gsr2448@goodyear.com	
GOODYEAR AUTO SERVICE #2450	Goodyear	4593 SAN JUAN	JACKSONVILLE	DUVAL	32210	(904) 389-3671	gsr2450@goodyear.com	
GOODYEAR AUTO SERVICE #2457	Goodyear	14150 BEACH BLVD	JACKSONVILLE	DUVAL	32250	(904) 223-9399	gsr2457@goodyear.com	
GOODYEAR AUTO SERVICE #2458	Goodyear	40 GIRVIN RD	JACKSONVILLE	DUVAL	32225	(904) 220-4929	gsr2458@goodyear.com	
GOODYEAR AUTO SERVICE #2460	Goodyear	9738 SAN JOSE BLVD	JACKSONVILLE	DUVAL	32257	(904) 260-8720	gsr2460@goodyear.com	
GOODYEAR AUTO SERVICE #2461	Goodyear	131 GATEWAY CIR	JACKSONVILLE	DUVAL	32259	(904) 823-1800	gsr2461@goodyear.com	
GOODYEAR AUTO SERVICE #2587	Goodyear	9927 ATLANTIC BLVD	JACKSONVILLE	DUVAL	32225	(904) 724-5111	gsr2587@goodyear.com	
GOODYEAR AUTO SERVICE #2593	Goodyear	1740 SOUTH 3RD ST	JACKSONVILLE	DUVAL	32250	(904) 241-0555	gsr2593@goodyear.com	
GOODYEAR COMMERCIAL TIRE & SVC	Goodyear, Cooper	450 LANE AVE N	JACKSONVILLE	DUVAL	32254	(904) 783-2541	ct_location_027@goodyear.com	
MAVIS TIRE EXPRESS SVCS CORP	Goodyear, Cooper	1178 3RD ST S	JACKSONVILLE	DUVAL	32250	(904) 694-2600	tmoran@mavistire.com	
MAVIS TIRE EXPRESS SVCS CORP	Goodyear, Cooper	910 DUNN AVE	JACKSONVILLE	DUVAL	32218	(904) 515-4550	tmoran@mavistire.com	
MAVIS TIRE EXPRESS SVCS CORP	Goodyear, Cooper	7390 103RD ST	JACKSONVILLE	DUVAL	32210	(904) 693-5183	tmoran@mavistire.com	
MAVIS TIRE EXPRESS SVCS CORP	Goodyear, Cooper	5942 UNIVERSITY BLVD W	JACKSONVILLE	DUVAL	32216	(904) 693-5178	tmoran@mavistire.com	
MAVIS TIRE EXPRESS SVCS CORP	Goodyear, Cooper	10101 ATLANTIC BLVD	JACKSONVILLE	DUVAL	32225	(904) 693-5173	tmoran@mavistire.com	
MAVIS TIRE EXPRESS SVCS CORP	Goodyear, Cooper	14175 BEACH BLVD	JACKSONVILLE	DUVAL	32250	(904) 693-5193	tmoran@mavistire.com	
MAVIS TIRE EXPRESS SVCS CORP	Goodyear, Cooper	9950 SAN JOSE BLVD	JACKSONVILLE	DUVAL	32257	(904) 693-5168	tmoran@mavistire.com	
MAVIS TIRE EXPRESS SVCS CORP	Goodyear, Cooper	2660 RACE TRACK RD	JACKSONVILLE	DUVAL	32259	(904) 693-5143	tmoran@mavistire.com	
MAVIS TIRE EXPRESS SVCS CORP	Goodyear, Cooper	13958 VILLAGE LAKE CIRCLE	JACKSONVILLE	DUVAL	32258	(904) 447-7515	tmoran@mavistire.com	
MAVIS TIRE EXPRESS SVCS CORP	Goodyear, Cooper	9718 TOUCHTON RD	JACKSONVILLE	DUVAL	32246	(904) 447-7516	tmoran@mavistire.com	
PEP BOYS #130	Goodyear, Cooper	1105 DUNN AVE	JACKSONVILLE	DUVAL	32218	(904) 696-0090	scott_grable@pepboys.com	
PEP BOYS #135	Goodyear, Cooper	919 LANE AVE S	JACKSONVILLE	DUVAL	32205	(904) 695-7770	scott_grable@pepboys.com	
PEP BOYS #1489	Goodyear, Cooper	8397 BAYMEADOWS RD	JACKSONVILLE	DUVAL	32256	(904) 448-5042	scott_grable@pepboys.com	
PEP BOYS #1642	Goodyear, Cooper	1737 N. 3RD ST	JACKSONVILLE BEACH	DUVAL	32250	(904) 246-0792	scott_grable@pepboys.com	
PEP BOYS #1824	Goodyear, Cooper	1300 NORTH 3RD ST	JACKSONVILLE BEACH	DUVAL	32250	(904) 758-8649	scott_grable@pepboys.com	

PEP BOYS #47	Goodyear, Cooper	9605 SAN JOSE BLVD	JACKSONVILLE	DUVAL	32257	(904) 260-9660	scott_grable@pepboys.com	
PEP BOYS #6621	Goodyear, Cooper	9148 PHILIPS HIGHWAY	JACKSONVILLE	DUVAL	32256	(904) 260-9600	scott_grable@pepboys.com	
PEP BOYS #6622	Goodyear, Cooper	12620 SAN JOSE BLVD	JACKSONVILLE	DUVAL	32223	(904) 268-2044	scott_grable@pepboys.com	
PEP BOYS #6623	Goodyear, Cooper	3726 ST AUGUSTINE RD	JACKSONVILLE	DUVAL	32207	(904) 398-6982	scott_grable@pepboys.com	
PEP BOYS #6624	Goodyear, Cooper	5431 ROOSEVELT BLVD	JACKSONVILLE	DUVAL	32210	(904) 387-9218	scott_grable@pepboys.com	
PEP BOYS #6626	Goodyear, Cooper	304 3RD ST N	JACKSONVILLE BEACH	DUVAL	32250	(904) 249-5711	scott_grable@pepboys.com	
PEP BOYS #6627	Goodyear, Cooper	13657-1 ATLANTIC BLVD	JACKSONVILLE	DUVAL	32225	(904) 221-1100	scott_grable@pepboys.com	
PEP BOYS #6628	Goodyear, Cooper	13131-1 WOLF BAY DRIVE	JACKSONVILLE	DUVAL	32218	(904) 757-6600	scott_grable@pepboys.com	
PEP BOYS #6629	Goodyear, Cooper	7762 BLANDING BLVD	JACKSONVILLE	DUVAL	32244	(904) 337-1053	scott_grable@pepboys.com	
TUBELS SERVICE CENTER INC	Goodyear	11411 N MAIN ST	JACKSONVILLE	DUVAL	32218	(904) 757-8100	wtubel@gmail.com	
ARLINGTON TIRE & SVC CTR	Goodyear, Cooper	5807 MERRILL RD	JACKSONVILLE	DUVAL	32277	(904) 743-6294	ataftgoodyear@gmail.com	
TIRE HUB LLC #104	Goodyear, Cooper	4101 BULLS BAY HIGHWAY	JACKSONVILLE	DUVAL	32219	(904) 693-8576	bryan.garrison@tirehub.com	
TIRESOLES OF JACKSONVILLE	Goodyear, Cooper	1475 PICKETTVILLE RD	JACKSONVILLE	DUVAL	32220	(904) 378-0090	astafford@tiresoles.com	
TUBELS SERVICE CENTER	Goodyear, Cooper	3483 PHILLIPS HWY	JACKSONVILLE	DUVAL	32207	(904) 398-4545	wtubel@gmail.com	
U S VENTURE INC	Goodyear, Cooper	5885 MINING TERRACE	JACKSONVILLE	DUVAL	32257	(904) 260-8700	bdecker@usautoforce.com	
MONRO INC	Goodyear, Cooper	3040 HIGHWAY 95A	CANTONMENT	ESCAMBIA	32533	(850) 474-1718	kyle.peterson@monro.com	
PEP BOYS #142	Goodyear, Cooper	4700 MOBILE HWY	PENSACOLA	ESCAMBIA	32506	(850) 457-1907	scott_grable@pepboys.com	
PEP BOYS #1536	Goodyear, Cooper	317 E NINE MILE RD	PENSACOLA	ESCAMBIA	32514	(850) 476-6530	scott_grable@pepboys.com	
PEP BOYS #1537	Goodyear, Cooper	549 NEW WARRINGTON RD	PENSACOLA	ESCAMBIA	32506	(850) 455-1305	scott_grable@pepboys.com	
PEP BOYS #1538	Goodyear, Cooper	300 E CERVANTES ST	PENSACOLA	ESCAMBIA	32501	(850) 433-5471	scott_grable@pepboys.com	
PEP BOYS #1542	Goodyear, Cooper	1560 W FAIRFIELD DR	PENSACOLA	ESCAMBIA	32501	(850) 432-7791	scott_grable@pepboys.com	
PEP BOYS #1545	Goodyear, Cooper	6389 NORTH 9TH AVE	PENSACOLA	ESCAMBIA	32504	(850) 477-0330	scott_grable@pepboys.com	
PEP BOYS #82	Goodyear, Cooper	6340 N DAVIS HWY	PENSACOLA	ESCAMBIA	32504	(850) 484-0605	scott_grable@pepboys.com	
VANNOYS TIRES INC	Goodyear	126 E NINE MILE RD	PENSACOLA	ESCAMBIA	32534	(850) 476-2507	clay.vannoy@gmail.com	
ACD HOLDINGS INC	Goodyear, Cooper	470 E NINE MILE RD	PENSACOLA	ESCAMBIA	32514	(850) 477-5044	coltssafety42@yahoo.com	
VANNOYS TIRES INC	Goodyear, Cooper	2252 W MICHIGAN AVE	PENSACOLA	ESCAMBIA	32526	(850) 477-0209	clay.vannoy@gmail.com	
VANNOYS TIRES INC	Goodyear, Cooper	6113 N NINTH AVE	PENSACOLA	ESCAMBIA	32504	(850) 477-0209	clay.vannoy@gmail.com	
VANNOYS TIRES INC	Goodyear, Cooper	1249 N NEW WARRINGTON RD	PENSACOLA	ESCAMBIA	32506	(850) 455-5492	clay.vannoy@gmail.com	
VANNOYS TIRES LLC	Goodyear, Cooper	3199 W NINE MILE RD	PENSACOLA	ESCAMBIA	32534	(850) 435-4555	clay.vannoy@gmail.com	
MAVIS TIRE EXPRESS SVCS CORP	Goodyear, Cooper	1430 PALM COAST PKWYNW	PALM COAST	FLAGLER	32137	(386) 597-4788	tmoran@mavistire.com	
A K TIRES LLC	Goodyear	5814 E HWY 100	PALM COAST	FLAGLER	32164	(386) 437-0888	shawn@aktires.com	
U S VENTURE INC	Goodyear, Cooper	695 COMMERCE BLVD	MIDWAY	GADSDEN	32343	(850) 224-8473	bdecker@usautoforce.com	
SUWANNEE VALLEY TIRE INC	Goodyear, Cooper	1225 NW US HWY 129	JASPER	HAMILTON	32052	(386) 792-2420	ehendry@windstream.net	
AKRON TIRE CO INC	Goodyear, Cooper	121 SOUTH BOND ST	CLEWISTON	HENDRY	33440	(863) 983-6197	astafford@tiresoles.com	
GOODYEAR AUTO SERVICE #2484	Goodyear	11021 NORTHCLIFFE BLVD.	SPRING HILL	HERNANDO	34608	(352) 398-1960	gsr2484@goodyear.com	
GOODYEAR AUTO SERVICE #2485	Goodyear	740 BROAD ST	BROOKSVILLE	HERNANDO	34601	(352) 796-4961	gsr2485@goodyear.com	
MAVIS TIRE EXPRESS SVCS CORP	Goodyear, Cooper	119 MARINER BLVD	SPRING HILL	HERNANDO	34609	(352) 587-5660	tmoran@mavistire.com	
MAVIS TIRE EXPRESS SVCS CORP	Goodyear, Cooper	1280 COMMERCIAL WAY	SPRING HILL	HERNANDO	34606	(352) 600-7971	tmoran@mavistire.com	
PEP BOYS #1703	Goodyear, Cooper	14414 SPRING HILL DRIVE	SPRING HILL	HERNANDO	34609	(352) 544-8273	scott_grable@pepboys.com	
BOBBYS AUTO REPAIR & BODY LLC	Goodyear	15136 COUNTY LINE RD	SPRING HILL	HERNANDO	34610	(727) 857-4430	bobbysautorepairllc@gmail.com	
FUTCH VENTURES INC	Goodyear	624 US 27 SOUTH	LAKE PLACID	HIGHLANDS	33852	(863) 465-5057	kennyfutch@hotmail.com	
FUTCH VENTURES INC	Goodyear, Cooper	1109 W MAIN ST	AVON PARK	HIGHLANDS	33825	(863) 452-2031	kennyfutch@hotmail.com	
GOODYEAR AUTO SERVICE #2428	Goodyear	3813 S DALE MABRY HWY	TAMPA	HILLSBOROUGH	33611	(813) 831-1891	gsr2428@goodyear.com	
GOODYEAR AUTO SERVICE #2438	Goodyear	13360 SOUTH US HWY 301	RIVERVIEW	HILLSBOROUGH	33578	(813) 677-1794	gsr2438@goodyear.com	
MAVIS TIRE EXPRESS SVCS CORP	Goodyear, Cooper	841 LITHIA PINECREST RD	BRANDON	HILLSBOROUGH	33511	(813) 982-3500	tmoran@mavistire.com	
MAVIS TIRE EXPRESS SVCS CORP	Goodyear, Cooper	2103 JAMES L REDMAN PARKWAY	PLANT CITY	HILLSBOROUGH	33563	(813) 756-2483	tmoran@mavistire.com	
MAVIS TIRE EXPRESS SVCS CORP	Goodyear, Cooper	10209 BIG BEND ROAD	RIVERVIEW	HILLSBOROUGH	33578	(813) 672-2030	tmoran@mavistire.com	
MAVIS TIRE EXPRESS SVCS CORP	Goodyear, Cooper	13110 US HIGHWAY 301	RIVERVIEW	HILLSBOROUGH	33578	(813) 533-5096	tmoran@mavistire.com	
MAVIS TIRE EXPRESS SVCS CORP	Goodyear, Cooper	1130 EAST FLETCHER AVE	TAMPA	HILLSBOROUGH	33612	(813) 980-0792	tmoran@mavistire.com	
MAVIS TIRE EXPRESS SVCS CORP	Goodyear, Cooper	17325 DONA MICHELLE DR	TAMPA	HILLSBOROUGH	33647	(813) 558-0882	tmoran@mavistire.com	
MAVIS TIRE EXPRESS SVCS CORP	Goodyear, Cooper	5660 W WATERS AVE	TAMPA	HILLSBOROUGH	33634	(813) 806-5765	tmoran@mavistire.com	
MAVIS TIRE EXPRESS SVCS CORP	Goodyear, Cooper	6422 HARNEY ROAD	TAMPA	HILLSBOROUGH	33610	(813) 553-6225	tmoran@mavistire.com	
MAVIS TIRE EXPRESS SVCS CORP	Goodyear, Cooper	4961 STATE ROAD 674	WIMAUMA	HILLSBOROUGH	33598	(813) 736-0265	tmoran@mavistire.com	
MONRO INC	Goodyear, Cooper	16505 FISH HAWK BLVD	LITHIA	HILLSBOROUGH	33547	(813) 689-5454	kyle.peterson@monro.com	
MONRO INC	Goodyear, Cooper	18951 STATE ROAD 54	LUTZ	HILLSBOROUGH	33558	(813) 751-0294	kyle.peterson@monro.com	
MONRO INC	Goodyear, Cooper	2102 JAMES L REDMAN PKWY	PLANT CITY	HILLSBOROUGH	33563	(813) 754-8473	kyle.peterson@monro.com	
MONRO INC	Goodyear, Cooper	10742 BIG BEND ROAD	RIVERVIEW	HILLSBOROUGH	33579	(813) 549-1813	kyle.peterson@monro.com	
MONRO INC	Goodyear, Cooper	7015 US HIGHWAY 301 S	RIVERVIEW	HILLSBOROUGH	33578	(585) 647-6400	kyle.peterson@monro.com	
MONRO INC	Goodyear, Cooper	12705 N DALE MABRY HIGHWAY	TAMPA	HILLSBOROUGH	33618	(813) 549-8968	kyle.peterson@monro.com	
MONRO INC	Goodyear, Cooper	3603 S DALE MABRY HWY	TAMPA	HILLSBOROUGH	33629	(813) 574-0940	kyle.peterson@monro.com	
MONRO INC	Goodyear, Cooper	20687 BRUCE B DOWNS BLVD	TAMPA	HILLSBOROUGH	33647	(813) 907-2599	kyle.peterson@monro.com	
MONRO INC	Goodyear, Cooper	13006 RACE TRACK RD	TAMPA	HILLSBOROUGH	33626	(813) 341-2100	kyle.peterson@monro.com	

MONRO INC	Goodyear, Cooper	4224 GUNN HWY	TAMPA	HILLSBOROUGH	33618	(813) 968-2657	kyle.peterson@monro.com	
MONRO INC	Goodyear, Cooper	601 N MORGAN ST	TAMPA	HILLSBOROUGH	33602	(813) 273-0988	kyle.peterson@monro.com	
MONRO INC	Goodyear, Cooper	8490 SHELDON RD	TAMPA	HILLSBOROUGH	33615	(813) 888-5388	kyle.peterson@monro.com	
MONRO INC	Goodyear, Cooper	6204 E HILLSBOROUGH AVE	TAMPA	HILLSBOROUGH	33610	(813) 623-5600	kyle.peterson@monro.com	
MONRO INC	Goodyear, Cooper	9240 N 56TH ST	TEMPLE TERRACE	HILLSBOROUGH	33617	(813) 988-4191	kyle.peterson@monro.com	
MONRO INC	Goodyear, Cooper	3523 BELL SHOALS RD	VALRICO	HILLSBOROUGH	33594	(813) 651-9585	kyle.peterson@monro.com	
MONRO INC	Goodyear, Cooper	2514 EAST STATE ROAD 60	VALRICO	HILLSBOROUGH	33594	(813) 685-6344	kyle.peterson@monro.com	
PEP BOYS #124	Goodyear, Cooper	3933 W HILLSBOROUGH AVE	TAMPA	HILLSBOROUGH	33614	(813) 884-1577	scott_grable@pepboys.com	
PEP BOYS #136	Goodyear, Cooper	10124 N FLORIDA AVE	TAMPA	HILLSBOROUGH	33612	(813) 933-2424	scott_grable@pepboys.com	
PEP BOYS #139	Goodyear, Cooper	1747 W BRANDON BLVD	BRANDON	HILLSBOROUGH	33511	(813) 689-0700	scott_grable@pepboys.com	
PEP BOYS #143	Goodyear, Cooper	15625 N DALE MABRY HWY	TAMPA	HILLSBOROUGH	33618	(813) 963-5545	scott_grable@pepboys.com	
PEP BOYS #1459	Goodyear, Cooper	7302 W. HILLSBOROUGH AVE	TAMPA	HILLSBOROUGH	33634	(813) 884-1890	scott_grable@pepboys.com	
PEP BOYS #1620	Goodyear, Cooper	6022 GUNN HWY	TAMPA	HILLSBOROUGH	33625	(813) 961-0361	scott_grable@pepboys.com	
PEP BOYS #1632	Goodyear, Cooper	10119 MCMULLEN ROAD	RIVERVIEW	HILLSBOROUGH	33569	(813) 677-0950	scott_grable@pepboys.com	
PEP BOYS #1687	Goodyear, Cooper	22545 CATFISH LAKE ROAD	LUTZ	HILLSBOROUGH	33549	(813) 909-7175	scott_grable@pepboys.com	
PEP BOYS #1802	Goodyear, Cooper	7655 W HILLSBOROUGH AVE	TAMPA	HILLSBOROUGH	33615	(813) 249-7736	scott_grable@pepboys.com	
PEP BOYS #1803	Goodyear, Cooper	214 E BRANDON BLVD	BRANDON	HILLSBOROUGH	33511	(813) 655-3476	scott_grable@pepboys.com	
PEP BOYS #1810	Goodyear, Cooper	2304 E BEARSS AVE	TAMPA	HILLSBOROUGH	33613	(813) 866-8790	scott_grable@pepboys.com	
PEP BOYS #1823	Goodyear, Cooper	8705 NORTH DALE MABRY	TAMPA	HILLSBOROUGH	33614	(813) 336-3330	scott_grable@pepboys.com	
ELITE AUTO & TIRES INC	Goodyear, Cooper	611 W ROBERTSON ST	BRANDON	HILLSBOROUGH	33511	(813) 689-7171	shannon@theeleitetotalcarcare.com	
GDYR AUTO SERVICE #3653	Goodyear, Cooper	1325 MASSARO BLVD	TAMPA	HILLSBOROUGH	33619	(813) 621-5891	gsr3653@goodyear.com	
LOVE'S TIRE & SERVICE CENTER	Goodyear, Cooper	1701 HIGHWAY 60 EAST	VALRICO	HILLSBOROUGH	33594	(813) 661-3955	evol6362@aol.com	
TIRE HUB LLC #103	Goodyear, Cooper	4942 JOANNE KEARNEY RD	TAMPA	HILLSBOROUGH	33619	(813) 621-3103	bryan.garrison@tirehub.com	
GOODYEAR AUTO SERVICE #6626	Goodyear	1920 58TH AVE	VERO BEACH	INDIAN RIVER	32966	(772) 562-4654	gsr6626@goodyear.com	
GOODYEAR AUTO SERVICE #6658	Goodyear	755 21ST ST	VERO BEACH	INDIAN RIVER	32960	(772) 567-1174	gsr6658@goodyear.com	
GOODYEAR AUTO SERVICE #2420	Goodyear	863 N HWY 27	LADY LAKE	LAKE	32159	(352) 751-1119	gsr2420@goodyear.com	
MAVIS TIRE EXPRESS SVCS CORP	Goodyear, Cooper	1602 HAMMOCK RIDGE RD	CLERMONT	LAKE	34711	(352) 708-3435	tmoran@mavistire.com	
MAVIS TIRE EXPRESS SVCS CORP	Goodyear, Cooper	591 E HIGHWAY 50	CLERMONT	LAKE	34711	(352) 702-4532	tmoran@mavistire.com	
MAVIS TIRE EXPRESS SVCS CORP	Goodyear, Cooper	16750 US HWY 441	MT. DORA	LAKE	32757	(352) 383-4994	tmoran@mavistire.com	
PEP BOYS #1054	Goodyear, Cooper	950 HOOKS STREET	CLERMONT	LAKE	34711	(352) 243-2109	scott_grable@pepboys.com	
PEP BOYS #1417	Goodyear, Cooper	1437 SUNRISE PLAZA DR	CLERMONT	LAKE	34714	(352) 536-1177	scott_grable@pepboys.com	
PEP BOYS #1419	Goodyear, Cooper	1314 W MAIN ST	LEESBURG	LAKE	34748	(352) 787-2144	scott_grable@pepboys.com	
PEP BOYS #1424	Goodyear, Cooper	15469 US HIGHWAY 441	EUSTIS	LAKE	32726	(352) 357-2637	scott_grable@pepboys.com	
PEP BOYS #1437	Goodyear, Cooper	10209 HIGHWAY 441	LEESBURG	LAKE	34788	(352) 314-6913	scott_grable@pepboys.com	
PEP BOYS #1821	Goodyear, Cooper	9816 US HIGHWAY 441	LEESBURG	LAKE	34788	(352) 504-3671	scott_grable@pepboys.com	
LAKE TIRE & AUTO INC	Goodyear, Cooper	812 W BURLEIGH BLVD	TAVARES	LAKE	32778	(352) 343-0041	smithralph669@gmail.com	
GOODYEAR AUTO SERVICE #2525	Goodyear	2144 DEL PRADO BLVD SOUTH	CAPE CORAL	LEE	33904	(239) 574-3539	gsr2525@goodyear.com	
MAVIS TIRE EXPRESS SVCS CORP	Goodyear, Cooper	1335 DEL PRADO BLVD S	CAPE CORAL	LEE	33990	(352) 474-5558	tmoran@mavistire.com	
MONRO INC	Goodyear, Cooper	12831 TRADE CENTER DR	BONITA SPRINGS	LEE	34135	(239) 947-1214	kyle.peterson@monro.com	
MONRO INC	Goodyear, Cooper	10100 BONITA BEACH ROAD	BONITA SPRINGS	LEE	34135	(239) 948-2777	kyle.peterson@monro.com	
MONRO INC	Goodyear, Cooper	946 NE PINE ISLAND ROAD	CAPE CORAL	LEE	33909	(239) 424-8657	kyle.peterson@monro.com	
MONRO INC	Goodyear, Cooper	1011 SW PINE ISLAND ROAD	CAPE CORAL	LEE	33991	(786) 465-7549	kyle.peterson@monro.com	
MONRO INC	Goodyear, Cooper	10451 CORKSCREW COMMONS DR	ESTERO	LEE	33928	(239) 949-1214	kyle.peterson@monro.com	
MONRO INC	Goodyear, Cooper	20441 S TAMIAMI TRAIL	ESTERO	LEE	33928	(239) 949-0777	kyle.peterson@monro.com	
MONRO INC	Goodyear, Cooper	20331 GRANDE OAKS BLVD	ESTERO	LEE	33928	(239) 390-9188	kyle.peterson@monro.com	
MONRO INC	Goodyear, Cooper	8600 GLADIOLUS DRIVE	FORT MYERS	LEE	33908	(239) 985-6992	kyle.peterson@monro.com	
MONRO INC	Goodyear, Cooper	9002 ROLFES ROAD	FORT MYERS	LEE	33966	(239) 278-3228	kyle.peterson@monro.com	
MONRO INC	Goodyear, Cooper	13621 FIDDLESTICKS BLVD	FORT MYERS	LEE	33912	(239) 561-5575	kyle.peterson@monro.com	
MONRO INC	Goodyear, Cooper	5960 COUNTY LAKES DR	FORT MYERS	LEE	33905	(239) 362-3025	kyle.peterson@monro.com	
MONRO INC	Goodyear, Cooper	15530 S TAMIAMI TRAIL	FORT MYERS	LEE	33908	(239) 948-2777	kyle.peterson@monro.com	
MONRO INC	Goodyear, Cooper	4230 COLONIAL BLVD	FORT MYERS	LEE	33966	(239) 353-0007	kyle.peterson@monro.com	
MONRO INC	Goodyear, Cooper	5785 BAYSHORE ROAD	FORT MYERS	LEE	33917	(239) 567-2777	kyle.peterson@monro.com	
MONRO INC	Goodyear, Cooper	3502 LEE BLVD	LEHIGH ACRES	LEE	33971	(239) 533-0064	kyle.peterson@monro.com	
MONRO INC	Goodyear, Cooper	3310 LEE BLVD	LEHIGH ACRES	LEE	33971	(239) 690-6441	kyle.peterson@monro.com	
PEP BOYS #1820	Goodyear, Cooper	1820 SDEL PRADO BLVD	CAPE CORAL	LEE	33990	(239) 214-6911	scott_grable@pepboys.com	
PEP BOYS #204	Goodyear, Cooper	4797 S CLEVELAND AVE	FORT MYERS	LEE	33907	(239) 939-5447	scott_grable@pepboys.com	
WALTER'S MCGREGOR LLC	Goodyear, Cooper	15135 MCGREGOR BLVD	FORT MYERS	LEE	33908	(239) 437-0377	barryjoslin@gmail.com	
MAVIS TIRE EXPRESS SVCS CORP	Goodyear, Cooper	2715 N MONROE ST	TALLAHASSEE	LEON	32303	(850) 422-2022	tmoran@mavistire.com	
MAVIS TIRE EXPRESS SVCS CORP	Goodyear, Cooper	2400 MILL CREEK LN	TALLAHASSEE	LEON	32308	(850) 553-9660	tmoran@mavistire.com	
MAVIS TIRE EXPRESS SVCS CORP	Goodyear, Cooper	3335 BEECH RIDE CT	TALLAHASSEE	LEON	32312	(850) 688-1196	tmoran@mavistire.com	
MAVIS TIRE EXPRESS SVCS CORP	Goodyear, Cooper	205 NORTH MAGNOLIA DR	TALLAHASSEE	LEON	32301	(850) 325-0971	tmoran@mavistire.com	
MONRO INC	Goodyear, Cooper	2400 CAPITAL CIRCLE NE	TALLAHASSEE	LEON	32308	(850) 386-8473	kyle.peterson@monro.com	

NEECE TIRE & AUTO SERVICE INC	Goodyear, Cooper	4792 BLOUNTSTOWN HWY	TALLAHASSEE	LEON	32304	(850) 574-4100	neecetire@msn.com	
PEP BOYS #123	Goodyear, Cooper	2353 APALACHEE PARKWAY	TALLAHASSEE	LEON	32301	(850) 656-9000	scott_grable@pepboys.com	
PEP BOYS #1523	Goodyear, Cooper	2525 NORTH MONROE ST	TALLAHASSEE	LEON	32303	(850) 385-5323	scott_grable@pepboys.com	
PEP BOYS #1524	Goodyear, Cooper	1425 WEST TENNESSEE ST	TALLAHASSEE	LEON	32304	(850) 224-0095	scott_grable@pepboys.com	
PEP BOYS #1525	Goodyear, Cooper	2237 CAPITAL CIRCLE NE	TALLAHASSEE	LEON	32308	(850) 385-4377	scott_grable@pepboys.com	
PEP BOYS #1526	Goodyear, Cooper	2984 APALACHEE PKWY	TALLAHASSEE	LEON	32301	(850) 656-1024	scott_grable@pepboys.com	
BLICKENDERFER ENTERPRISES INC	Goodyear, Cooper	3206 APALACHEE PKWY	TALLAHASSEE	LEON	32311	(850) 656-8473	blick111@gmail.com	
NE-RO TIRE & BRAKE SVC INC	Goodyear	2311 S PATTERSON ST	VALDOSTA	LOWNDES	31601	(229) 244-8353	neecetire@msn.com	
MAVIS TIRE EXPRESS SVCS CORP	Goodyear, Cooper	5706 FL 64 EAST	BRADENTON	MANATEE	34208	(941) 877-2093	tmoran@mavistire.com	
MAVIS TIRE EXPRESS SVCS CORP	Goodyear, Cooper	15209 GARNET TRAIL	BRADENTON	MANATEE	34211	(941) 900-4495	tmoran@mavistire.com	
MAVIS TIRE EXPRESS SVCS CORP	Goodyear, Cooper	6025 STATE ROAD 70 E	BRADENTON	MANATEE	34203	(941) 751-1818	tmoran@mavistire.com	
MAVIS TIRE EXPRESS SVCS CORP	Goodyear, Cooper	6008 LAKEWOOD RANCH BLVD	BRADENTON	MANATEE	34211	(941) 238-0193	tmoran@mavistire.com	
MAVIS TIRE EXPRESS SVCS CORP	Goodyear, Cooper	8268 US 301 N	PARRISH	MANATEE	34219	(941) 532-1002	tmoran@mavistire.com	
MONRO INC	Goodyear, Cooper	5720 RANCH LAKE ROAD	BRADENTON	MANATEE	34202	(941) 756-8605	kyle.peterson@monro.com	
MONRO INC	Goodyear, Cooper	5202 E STATE ROAD 64	BRADENTON	MANATEE	34208	(941) 749-6100	kyle.peterson@monro.com	
MONRO INC	Goodyear, Cooper	8712 E STATE ROAD 70	BRADENTON	MANATEE	34202	(941) 755-8394	kyle.peterson@monro.com	
PEP BOYS #1808	Goodyear, Cooper	6324 14TH ST WEST	BRADENTON	MANATEE	34207	(941) 751-7519	scott_grable@pepboys.com	
PEP BOYS #398	Goodyear, Cooper	2303 CORTEZ RD	BRADENTON	MANATEE	34207	(941) 739-1525	scott_grable@pepboys.com	
PARKERS TIRE & SERVICE INC	Goodyear	3000 NW PINE AVE	OCALA	MARION	34475	(352) 320-0786	kevin@parkerstire.com	
GOODYEAR COMMERCIAL TIRE & SVC	Goodyear, Cooper	1120 SW 12TH ST	OCALA	MARION	34471	(352) 351-3360	ct_location_028@goodyear.com	
MAVIS TIRE EXPRESS SVCS CORP	Goodyear, Cooper	4441 SE 102ND PLACE	BELLEVIEW	MARION	34420	(352) 719-4271	tmoran@mavistire.com	
MAVIS TIRE EXPRESS SVCS CORP	Goodyear, Cooper	16676 US HIGHWAY 441	SUMMERFIELD	MARION	34491	(352) 693-2245	tmoran@mavistire.com	
MONRO INC	Goodyear, Cooper	4710 SW COLLEGE ROAD	OCALA	MARION	34474	(352) 414-5589	kyle.peterson@monro.com	
MONRO INC	Goodyear, Cooper	14650 US HWY 441	SUMMERFIELD	MARION	34491	(352) 240-1163	kyle.peterson@monro.com	
PEP BOYS #1659	Goodyear, Cooper	2170 NE 49TH COURT RD.	OCALA	MARION	34470	(352) 624-8654	scott_grable@pepboys.com	
PEP BOYS #1819	Goodyear, Cooper	2425 NE SILVER SPRNGS BLVD	OCALA	MARION	34470	(352) 368-3697	scott_grable@pepboys.com	
PEP BOYS #598	Goodyear, Cooper	2035 SW COLLEGE RD	OCALA	MARION	34471	(352) 369-0303	scott_grable@pepboys.com	
ADVANCED TIRE LLC	Goodyear, Cooper	2418 E SILVER SPRINGS BLVD	OCALA	MARION	34470	(352) 236-8825	jguinn@advancedtireservicefl.com	
ADVANCED TIRE LLC	Goodyear, Cooper	2199 NW 10TH ST	OCALA	MARION	34475	(352) 236-8825	jguinn@advancedtireservicefl.com	
GOODYEAR AUTO SERVICE #6657	Goodyear	1955 SE FEDERAL HWY	STUART	MARTIN	34994	(772) 286-8550	gsr6657@goodyear.com	
MONRO INC	Goodyear, Cooper	4295 SE FEDERAL HWY BLD B	STUART	MARTIN	34997	(772) 320-0960	kyle.peterson@monro.com	
PEP BOYS #1828	Goodyear, Cooper	11350 SE FEDERAL HWY	HOBE SOUND	MARTIN	33455	(772) 546-2195	scott_grable@pepboys.com	
CERTIFIED TIRE & SERVICE LLC	Goodyear	995 SW MARTIN DOWNS BLVD	PALM CITY	MARTIN	34990	(772) 324-9145	swatson005@yahoo.com	
GOODYEAR AUTO SERVICE #2556	Goodyear	12850 WEST DIXIE HWY	NORTH MIAMI	MIAMI-DADE	33161	(305) 891-4648	gsr2556@goodyear.com	
GOODYEAR AUTO SERVICE #6624	Goodyear	11530 SW 147TH AVE	MIAMI	MIAMI-DADE	33173	(305) 385-9753	gsr6624@goodyear.com	
GOODYEAR AUTO SERVICE #6641	Goodyear	2670 W 68TH ST	HIALEAH	MIAMI-DADE	33016	(305) 819-7433	gsr6641@goodyear.com	
GOODYEAR AUTO SERVICE #6644	Goodyear	9001 S DIXIE HWY	MIAMI	MIAMI-DADE	33156	(305) 667-7575	gsr6644@goodyear.com	
GOODYEAR AUTO SERVICE #6651	Goodyear	3690 BIRD AVE	CORAL GABLES	MIAMI-DADE	33133	(305) 446-8101	gsr6651@goodyear.com	
GOODYEAR AUTO SERVICE #6675	Goodyear	30100 S DIXIE HWY	HOMESTEAD	MIAMI-DADE	33030	(305) 247-6966	gsr6675@goodyear.com	
PAULS TIRE INC	Goodyear	7601 NW 66TH ST	MIAMI	MIAMI-DADE	33166	(305) 592-0509	ianseaman@yahoo.com	
GOODYEAR COMMERCIAL TIRE & SVC	Goodyear, Cooper	3045 NW 119TH ST	MIAMI	MIAMI-DADE	33167	(305) 687-3400	ct_location_110@goodyear.com	
MONRO INC	Goodyear, Cooper	13150 SW 87TH AVENUE	MIAMI	MIAMI-DADE	33176	(786) 842-3540	kyle.peterson@monro.com	
MONRO INC	Goodyear, Cooper	13790 SW 56TH STREET	MIAMI	MIAMI-DADE	33175	(305) 382-3400	kyle.peterson@monro.com	
MONRO INC	Goodyear, Cooper	8291 BISCAYNE BLVD	MIAMI	MIAMI-DADE	33138	(585) 647-6400	kyle.peterson@monro.com	
MONRO INC	Goodyear, Cooper	1850 ALTON ROAD	MIAMI BEACH	MIAMI-DADE	33139	(305) 532-4807	kyle.peterson@monro.com	
PEP BOYS #133	Goodyear, Cooper	10200 BROAD CHANNEL RD	MIAMI	MIAMI-DADE	33157	(305) 252-7311	scott_grable@pepboys.com	
PEP BOYS #153	Goodyear, Cooper	17050 NORTHWEST 57TH AVE	HIALEAH	MIAMI-DADE	33015	(305) 557-4498	scott_grable@pepboys.com	
PEP BOYS #157	Goodyear, Cooper	2301 S W 8TH ST	MIAMI	MIAMI-DADE	33135	(305) 541-7200	scott_grable@pepboys.com	
PEP BOYS #167	Goodyear, Cooper	211 NW 82ND AVE	MIAMI	MIAMI-DADE	33126	(305) 264-6355	scott_grable@pepboys.com	
PEP BOYS #173	Goodyear, Cooper	295 NE 167TH ST	MIAMI	MIAMI-DADE	33162	(305) 655-3000	scott_grable@pepboys.com	
PEP BOYS #369	Goodyear, Cooper	10660 S W 40TH ST	MIAMI	MIAMI-DADE	33165	(305) 220-8877	scott_grable@pepboys.com	
BLACKWELL MIAMI INC	Goodyear	8250 N MIAMI AVE	MIAMI	MIAMI-DADE	33150	(305) 603-9025	admin@blackwellmiami.com	
FESTIVAL TIRES III INC	Goodyear	4696 PALM AVE	HIALEAH	MIAMI-DADE	33012	(305) 512-9662	angel.mediavilla@yahoo.com	
TECH & TIRES CORP	Goodyear	8761 SW 40TH STREET	MIAMI	MIAMI-DADE	33165	(305) 229-1820	techtires@gmail.com	
ADVENTURE TIRES 3 LLC	Goodyear, Cooper	7930 NW 36TH STREET	MIAMI	MIAMI-DADE	33166	(954) 385-8696	gerencia.corpotyre@gmail.com	
BALADO NATIONAL TIRES INC	Goodyear, Cooper	1633 NW 27TH AVENUE	MIAMI	MIAMI-DADE	33125	(305) 635-9001	orlando@balado.com	
KM PEDERSEN ENTERPRISES INC	Goodyear, Cooper	406 WASHINGTON AVE	HOMESTEAD	MIAMI-DADE	33030	(305) 245-9533	kmped@aol.com	
REPAIRS 4 LESS AND TIRES INC	Goodyear, Cooper	20125 NW 67TH AVE	HIALEAH	MIAMI-DADE	33015	(305) 623-0569	gianttiregoodyear@gmail.com	
TIRE HUB LLC #152	Goodyear, Cooper	14350 NW 56TH CT UNIT 120	MIAMI	MIAMI-DADE	33054	(305) 681-4129	bryan.garrison@tirehub.com	
TIRESOLES OF BROWARD INC	Goodyear, Cooper	7800 N W 103RD ST	HIALEAH	MIAMI-DADE	33016	(305) 821-2121	s4tires@aol.com	
WESTLAND AUTO CENTER LLC	Goodyear, Cooper	4000 W 16TH AVE	HIALEAH	MIAMI-DADE	33012	(305) 557-8888	vmorales@westlandautocenter.com	
GOODYEAR COMMERCIAL TIRE & SVC	Goodyear, Cooper	1295 WEST I65 SERVICE RD N	MOBILE	MOBILE	36618	(251) 471-2714	ct_location_104@goodyear.com	

MAVIS TIRE EXPRESS SVCS CORP	Goodyear, Cooper	463697 STATE RD 200	YULEE	NASSAU	32097	(904) 441-0754	tmoran@mavistire.com	
FIRST CHOICE CAR CARE INC	Goodyear, Cooper	463670 SR 200	YULEE	NASSAU	32097	(904) 225-2775	mwburdett@gmail.com	
PURE AUTO CENTERS LLC	Goodyear, Cooper	463140 SR 200	YULEE	NASSAU	32097	(904) 463-8907	vett3030@yahoo.com	
GOODYEAR AUTO SERVICE #2249	Goodyear	1056 JOHN SIMS PKWY	NICEVILLE	OKALOOSA	32578	(850) 678-2522	gsr2249@goodyear.com	
GOODYEAR AUTO SERVICE #2251	Goodyear	34721 EMERALD COAST PARKWAY	DESTIN	OKALOOSA	32541	(850) 650-2338	gsr2251@goodyear.com	
PEP BOYS #1530	Goodyear, Cooper	311 NE RACETRACK RD	FORT WALTON BEACH	OKALOOSA	32547	(850) 863-1102	scott_grable@pepboys.com	
PEP BOYS #1531	Goodyear, Cooper	35800 EMERALD COAST PKWY	DESTIN	OKALOOSA	32541	(850) 650-1575	scott_grable@pepboys.com	
PEP BOYS #1532	Goodyear, Cooper	15 W MIRACLE STRIP PKWY	FORT WALTON BEACH	OKALOOSA	32548	(850) 243-7632	scott_grable@pepboys.com	
PEP BOYS #1533	Goodyear, Cooper	883 N FERDON BLVD	CRESTVIEW	OKALOOSA	32536	(850) 689-1550	scott_grable@pepboys.com	
PEP BOYS #1534	Goodyear, Cooper	705 NORTH BEAL ST	FORT WALTON BEACH	OKALOOSA	32547	(850) 862-2164	scott_grable@pepboys.com	
PEP BOYS #1535	Goodyear, Cooper	796 JOHN SIMS PKWY	NICEVILLE	OKALOOSA	32578	(850) 678-0887	scott_grable@pepboys.com	
HUB CITY TIRE COMPANY	Goodyear, Cooper	615 N FERDON BLVD	CRESTVIEW	OKALOOSA	32536	(850) 682-5121	crestviewtire1@gmail.com	
TOTAL ROADSIDE SERVICES LLC	Goodyear, Cooper	3176 HIGHWAY 710 EAST	OKEECHOBEE	OKEECHOBEE	34974	(863) 357-8772	totalroadsideservice@hotmail.com	
GOODYEAR AUTO SERVICE #2435	Goodyear	447 S GOLDENROD RD	ORLANDO	ORANGE	32822	(407) 249-0037	gsr2435@goodyear.com	
GOODYEAR AUTO SERVICE #2437	Goodyear	8265 S JOHN YOUNG PARKWAY	ORLANDO	ORANGE	32819	(407) 354-4422	gsr2437@goodyear.com	
GOODYEAR AUTO SERVICE #2456	Goodyear	601 N BUMBY AVE	ORLANDO	ORANGE	32803	(407) 894-0511	gsr2456@goodyear.com	
GOODYEAR COMMERCIAL TIRE & SVC	Goodyear, Cooper	971 TAFT VINELAND RD	ORLANDO	ORANGE	32824	(407) 855-1182	ct_location_111@goodyear.com	
MAVIS TIRE EXPRESS SVCS CORP	Goodyear, Cooper	2213 E SEMORAN BLVD	APOPKA	ORANGE	32703	(407) 502-4697	tmoran@mavistire.com	
MAVIS TIRE EXPRESS SVCS CORP	Goodyear, Cooper	1675 E. SEMORAN BLVD	APOPKA	ORANGE	32703	(407) 884-4441	tmoran@mavistire.com	
MAVIS TIRE EXPRESS SVCS CORP	Goodyear, Cooper	11203 W COLONIAL DRIVE	OCOEE	ORANGE	34761	(407) 439-2815	tmoran@mavistire.com	
MAVIS TIRE EXPRESS SVCS CORP	Goodyear, Cooper	1717 LEE ROAD	ORLANDO	ORANGE	32810	(407) 641-4202	tmoran@mavistire.com	
MAVIS TIRE EXPRESS SVCS CORP	Goodyear, Cooper	4698 S ORANGE AVENUE	ORLANDO	ORANGE	32806	(407) 269-8762	tmoran@mavistire.com	
MAVIS TIRE EXPRESS SVCS CORP	Goodyear, Cooper	11231 S ORANGE BLOSSOM	ORLANDO	ORANGE	32837	(407) 915-3756	tmoran@mavistire.com	
MAVIS TIRE EXPRESS SVCS CORP	Goodyear, Cooper	300 S ALAFAYA TRAIL	ORLANDO	ORANGE	32828	(407) 966-2305	tmoran@mavistire.com	
MAVIS TIRE EXPRESS SVCS CORP	Goodyear, Cooper	1000 CAR CARE DRIVE	ORLANDO	ORANGE	32836	(407) 824-0976	tmoran@mavistire.com	
MAVIS TIRE EXPRESS SVCS CORP	Goodyear, Cooper	14373 NARCOOSSEE ROAD	ORLANDO	ORANGE	32832	(407) 707-8637	tmoran@mavistire.com	
MAVIS TIRE EXPRESS SVCS CORP	Goodyear, Cooper	11571 DARYL CARTER PKWY	ORLANDO	ORANGE	32821	(321) 300-7553	tmoran@mavistire.com	
MAVIS TIRE EXPRESS SVCS CORP	Goodyear, Cooper	14369 NARCOOSSEE RD	ORLANDO	ORANGE	32832	(407) 985-2156	tmoran@mavistire.com	
MAVIS TIRE EXPRESS SVCS CORP	Goodyear, Cooper	4111 NJOHN YOUNG PARKWAY	ORLANDO	ORANGE	32804	(407) 295-3535	tmoran@mavistire.com	
MAVIS TIRE EXPRESS SVCS CORP	Goodyear, Cooper	333 THORPE ROAD	ORLANDO	ORANGE	32824	(407) 816-8143	tmoran@mavistire.com	
MAVIS TIRE EXPRESS SVCS CORP	Goodyear, Cooper	5645 METROWEST BLVD	ORLANDO	ORANGE	32811	(407) 352-7824	tmoran@mavistire.com	
MAVIS TIRE EXPRESS SVCS CORP	Goodyear, Cooper	7444 NARCOOSSEE RD	ORLANDO	ORANGE	32822	(321) 235-6052	tmoran@mavistire.com	
MAVIS TIRE EXPRESS SVCS CORP	Goodyear, Cooper	11685 SVL PRK DR	WINDERMERE	ORANGE	34786	(407) 392-9168	tmoran@mavistire.com	
MAVIS TIRE EXPRESS SVCS CORP	Goodyear, Cooper	5185 HAMLIN GRVS	WINTER GARDEN	ORANGE	34787	(407) 347-3239	tmoran@mavistire.com	
MAVIS TIRE EXPRESS SVCS CORP	Goodyear, Cooper	1070 W FAIRBANKSAV	WINTER PARK	ORANGE	32789	(407) 269-8143	tmoran@mavistire.com	
MAVIS TIRE EXPRESS SVCS CORP	Goodyear, Cooper	2040 FL-436	WINTER PARK	ORANGE	32792	(407) 543-0366	tmoran@mavistire.com	
MONRO INC	Goodyear, Cooper	7412 HOFFNER AVENUE	ORLANDO	ORANGE	32822	(407) 434-0768	kyle.peterson@monro.com	
MONRO INC	Goodyear, Cooper	255 E TOWN CENTER BLVD	ORLANDO	ORANGE	32824	(585) 647-6400	kyle.peterson@monro.com	
MONRO INC	Goodyear, Cooper	333 W AVALON PARK BLVD	ORLANDO	ORANGE	32828	(407) 318-2944	kyle.peterson@monro.com	
MONRO INC	Goodyear, Cooper	11861 CURRY FORD ROAD	ORLANDO	ORANGE	32822	(407) 955-4564	kyle.peterson@monro.com	
MONRO INC	Goodyear, Cooper	1006 JETSTREAM DR	ORLANDO	ORANGE	32824	(407) 888-4994	kyle.peterson@monro.com	
PEP BOYS #125	Goodyear, Cooper	7750 S ORANGE BLOSSOM TRL	ORLANDO	ORANGE	32809	(407) 851-2626	scott_grable@pepboys.com	
PEP BOYS #126	Goodyear, Cooper	601 POWERS DR	ORLANDO	ORANGE	32818	(407) 295-5553	scott_grable@pepboys.com	
PEP BOYS #1422	Goodyear, Cooper	260 E MAIN ST	APOPKA	ORANGE	32703	(407) 886-2699	scott_grable@pepboys.com	
PEP BOYS #1496	Goodyear, Cooper	4400 S. SEMORAN BLVD	ORLANDO	ORANGE	32822	(407) 381-8537	scott_grable@pepboys.com	
PEP BOYS #1518	Goodyear, Cooper	10306 E COLONIAL DR	UNION PARK	ORANGE	32817	(407) 282-3155	scott_grable@pepboys.com	
PEP BOYS #1520	Goodyear, Cooper	5546 LB MCLEOD RD	ORLANDO	ORANGE	32811	(407) 295-2658	scott_grable@pepboys.com	
PEP BOYS #1522	Goodyear, Cooper	420 WOODLAND LAKE DR	ORLANDO	ORANGE	32828	(407) 207-1750	scott_grable@pepboys.com	
PEP BOYS #1613	Goodyear, Cooper	8805 WEST COLONIAL DR	OCOEE	ORANGE	34761	(407) 293-8634	scott_grable@pepboys.com	
PEP BOYS #1694	Goodyear, Cooper	351 AVALON PARK S BLVD	ORLANDO	ORANGE	32828	(407) 207-4588	scott_grable@pepboys.com	
PEP BOYS #1811	Goodyear, Cooper	11460 W COLONIAL DRIVE	OCOEE	ORANGE	34761	(407) 654-9847	scott_grable@pepboys.com	
PEP BOYS #1812	Goodyear, Cooper	3327 W COLONIAL DRIVE	ORLANDO	ORANGE	32808	(407) 521-8111	scott_grable@pepboys.com	
PEP BOYS #544	Goodyear, Cooper	2000 EAST SEMORAN BLVD	APOPKA	ORANGE	32703	(407) 880-4500	scott_grable@pepboys.com	
PEP BOYS #6588	Goodyear, Cooper	4400 S SEMORAN BLVD	ORLANDO	ORANGE	32822	(407) 776-0738	scott_grable@pepboys.com	
3D TIRE COMPANY	Goodyear, Cooper	538 W KENNEDY BLVD	ORLANDO	ORANGE	32810	(407) 875-3399	3dtire@3dtirecompany.com	
D.G. WILLIAMS	Goodyear, Cooper	200 WEST MAIN ST	APOPKA	ORANGE	32703	(407) 889-7074	dwilli6573@aol.com	
TIRE HUB LLC #107	Goodyear, Cooper	450 GILLS DRIVE STE 100	ORLANDO	ORANGE	32824	(407) 277-9052	bryan.garrison@tirehub.com	
US TIRE IMPORTS INC	Goodyear, Cooper	12475 W COLONIAL DRIVE	WINTER GARDEN	ORANGE	34787	(407) 614-8344	accounts@ustireimports.com	
GOODYEAR AUTO SERVICE #2421	Goodyear	1031 BUENAVENTURA BLVD	KISSIMMEE	OSCEOLA	34743	(407) 344-8108	gsr2421@goodyear.com	
MAVIS TIRE EXPRESS SVCS CORP	Goodyear, Cooper	4135 W VINE STREET	KISSIMMEE	OSCEOLA	34741	(407) 543-1718	tmoran@mavistire.com	
MAVIS TIRE EXPRESS SVCS CORP	Goodyear, Cooper	4550 13TH STREET	SAINT CLOUD	OSCEOLA	34769	(407) 809-3105	tmoran@mavistire.com	
PEP BOYS #1423	Goodyear, Cooper	70 BLAKE DR	CELEBRATION	OSCEOLA	34747	(321) 939-2581	scott_grable@pepboys.com	

PEP BOYS #1519	Goodyear, Cooper	4561 13TH STREET	SAINT CLOUD	OSCEOLA	34769	(407) 891-3661	scott_grable@pepboys.com	
PEP BOYS #1655	Goodyear, Cooper	2708 W. OSCEOLA PARKWAY	KISSIMMEE	OSCEOLA	34741	(407) 518-2098	scott_grable@pepboys.com	
PEP BOYS #310	Goodyear, Cooper	302 W VINE ST	KISSIMMEE	OSCEOLA	34741	(407) 933-0055	scott_grable@pepboys.com	
GOODYEAR AUTO SERVICE #2527	Goodyear	1350 W INDIANTOWN RD	JUPITER	PALM BEACH	33458	(561) 741-4379	gsr2527@goodyear.com	
GOODYEAR AUTO SERVICE #6625	Goodyear	199 NW 1ST AVE	BOCA RATON	PALM BEACH	33432	(561) 368-3898	gsr6625@goodyear.com	
GOODYEAR AUTO SERVICE #6642	Goodyear	4358 S SR 7	LAKE WORTH	PALM BEACH	33467	(561) 304-7344	gsr6642@goodyear.com	
GOODYEAR AUTO SERVICE #6649	Goodyear	515 S DIXIE HWY	WEST PALM BEACH	PALM BEACH	33401	(561) 832-4181	gsr6649@goodyear.com	
GOODYEAR AUTO SERVICE #6654	Goodyear	532 N LAKE BLVD	NORTH PALM BEACH	PALM BEACH	33408	(561) 848-2544	gsr6654@goodyear.com	
GOODYEAR AUTO SERVICE #6668	Goodyear	11451 SOUTHERN BLVD	ROYAL PALM BEACH	PALM BEACH	33411	(561) 793-1115	gsr6668@goodyear.com	
MAVIS TIRE EXPRESS SVCS CORP	Goodyear, Cooper	10 NW 28TH ST	BOCA RATON	PALM BEACH	33431	(561) 453-1444	tmoran@mavistire.com	
MONRO INC	Goodyear, Cooper	22923 SANDALFOOT PLAZA DR	BOCA RATON	PALM BEACH	33428	(561) 488-1822	kyle.peterson@monro.com	
MONRO INC	Goodyear, Cooper	3940 HYPOLUXO ROAD	BOYNTON BEACH	PALM BEACH	33436	(561) 641-7518	kyle.peterson@monro.com	
MONRO INC	Goodyear, Cooper	1640 S CONGRESS AVE	BOYNTON BEACH	PALM BEACH	33426	(561) 752-9090	kyle.peterson@monro.com	
MONRO INC	Goodyear, Cooper	4715 WEST ATLANTIC AVE	DELRAY BEACH	PALM BEACH	33445	(561) 638-5526	kyle.peterson@monro.com	
MONRO INC	Goodyear, Cooper	4690 LAKE WORTH RD	GREENACRES	PALM BEACH	33463	(561) 967-9120	kyle.peterson@monro.com	
MONRO INC	Goodyear, Cooper	4601 W HYPOLUXO RD	LAKE WORTH	PALM BEACH	33463	(561) 964-0200	kyle.peterson@monro.com	
MONRO INC	Goodyear, Cooper	5865 STATE ROAD 7	LAKE WORTH	PALM BEACH	33449	(561) 868-4676	kyle.peterson@monro.com	
MONRO INC	Goodyear, Cooper	1213-1 STATE ROAD 7	ROYAL PALM BEACH	PALM BEACH	33411	(561) 784-7811	kyle.peterson@monro.com	
MONRO INC	Goodyear, Cooper	7800 W OKEECHOBEE BLVD	WEST PALM BEACH	PALM BEACH	33411	(561) 640-7890	kyle.peterson@monro.com	
MONRO INC	Goodyear, Cooper	1118 N DIXIE HIGHWAY	WEST PALM BEACH	PALM BEACH	33401	(561) 659-1066	kyle.peterson@monro.com	
PEP BOYS #194	Goodyear, Cooper	4301 LAKE WORTH RD	LAKE WORTH	PALM BEACH	33461	(561) 968-4688	scott_grable@pepboys.com	
PEP BOYS #285	Goodyear, Cooper	3169 NORTHLAKE BLVD	PALM BEACH GARDENS	PALM BEACH	33403	(561) 881-8744	scott_grable@pepboys.com	
PEP BOYS #370	Goodyear, Cooper	800 N MILITARY TRAIL	WEST PALM BEACH	PALM BEACH	33415	(561) 686-3004	scott_grable@pepboys.com	
PEP BOYS #397	Goodyear, Cooper	2064 W INDIANTOWN RD	JUPITER	PALM BEACH	33458	(561) 748-9444	scott_grable@pepboys.com	
AKRON TIRE CO INC	Goodyear	41 SE AVE C	BELLE GLADE	PALM BEACH	33430	(561) 996-6556	astafford@tiresoles.com	
EASY PAY TIRE STORES INC	Goodyear, Cooper	619 N FEDERAL HIGHWAY	BOYNTON BEACH	PALM BEACH	33435	(561) 732-2696	doug@easypaytire.com	
MARTINO COMMERCIAL TIRE LLC	Goodyear, Cooper	751 S CONGRESS AVE	WEST PALM BEACH	PALM BEACH	33406	(561) 683-0535	gturner@martinotire.com	
TIRESOLES OF BROWARD INC	Goodyear, Cooper	402 RINKER WAY	LAKE WORTH	PALM BEACH	33461	(561) 588-2777	astafford@tiresoles.com	
GOODYEAR AUTO SERVICE #2424	Goodyear	16006 STATE RD 54	ODESSA	PASCO	33556	(813) 926-8485	gsr2424@goodyear.com	
GOODYEAR AUTO SERVICE #2446	Goodyear	27342 WESLEY CHAPEL BLVD	WESLEY CHAPEL	PASCO	33544	(813) 991-1090	gsr2446@goodyear.com	
MAVIS TIRE EXPRESS SVCS CORP	Goodyear, Cooper	12229 LITTLE ROAD	HUDSON	PASCO	34667	(727) 819-4668	tmoran@mavistire.com	
MAVIS TIRE EXPRESS SVCS CORP	Goodyear, Cooper	3530 LAND O LAKES BLVD	LAND O LAKES	PASCO	34639	(813) 996-2290	tmoran@mavistire.com	
MAVIS TIRE EXPRESS SVCS CORP	Goodyear, Cooper	5444 LITTLE RD	NEW PORT RICHEY	PASCO	34655	(727) 753-0017	tmoran@mavistire.com	
MAVIS TIRE EXPRESS SVCS CORP	Goodyear, Cooper	27303 WESLEY CHAPEL BLVD	WESLEY CHAPEL	PASCO	33544	(813) 907-5200	tmoran@mavistire.com	
MONRO INC	Goodyear, Cooper	22267 COLLIER PKWY	LAND O LAKES	PASCO	34639	(813) 995-6272	kyle.peterson@monro.com	
MONRO INC	Goodyear, Cooper	4710 ROWAN ROAD	NEW PORT RICHEY	PASCO	34653	(727) 376-5493	kyle.peterson@monro.com	
MONRO INC	Goodyear, Cooper	10627 STATE ROAD 54	NEW PORT RICHEY	PASCO	34655	(585) 647-6400	kyle.peterson@monro.com	
PEP BOYS #1822	Goodyear, Cooper	9208 US HWY 19 N	PORT RICHEY	PASCO	34668	(727) 619-4854	scott_grable@pepboys.com	
CRYSTAL BEACH TIRE & AUTO INC	Goodyear, Cooper	5038 US HWY 19	NEW PORT RICHEY	PASCO	34652	(727) 849-7516	gtc1945@tampbay.rr.com	
GEORGE'S WHSLE TIRE PASCO INC	Goodyear, Cooper	8230 US HIGHWAY 19	PORT RICHEY	PASCO	34668	(727) 817-0905	generalmailbox@gwtires.com	
LEONE TIRE & AUTO	Goodyear, Cooper	2424 US HWY 19 N	HOLIDAY	PASCO	34691	(727) 934-5470	Leonetire@gmail.com	
GOODYEAR AUTO SERVICE #2430	Goodyear	904 E TARPON AVE	TARPON SPRINGS	PINELLAS	34689	(727) 937-4179	gsr2430@goodyear.com	
GOODYEAR AUTO SERVICE #2431	Goodyear	2910 PALM HARBOR BLVD	PALM HARBOR	PINELLAS	34683	(727) 787-1007	gsr2431@goodyear.com	
GOODYEAR AUTO SERVICE #2452	Goodyear	4115 E BAY DR	CLEARWATER	PINELLAS	33764	(727) 536-9404	gsr2452@goodyear.com	
GOODYEAR COMMERCIAL TIRE & SVC	Goodyear, Cooper	11601 47TH ST N	CLEARWATER	PINELLAS	33762	(727) 299-0722	ct_location_105@goodyear.com	
MAVIS TIRE EXPRESS SVCS CORP	Goodyear, Cooper	2165 GULF TO BAY BLVD	CLEARWATER	PINELLAS	33765	(727) 431-3101	tmoran@mavistire.com	
MAVIS TIRE EXPRESS SVCS CORP	Goodyear, Cooper	1798 NORTH HERCULES	CLEARWATER	PINELLAS	33765	(727) 466-4724	tmoran@mavistire.com	
MAVIS TIRE EXPRESS SVCS CORP	Goodyear, Cooper	1810 MAIN ST	DUNEDIN	PINELLAS	34698	(727) 748-4265	tmoran@mavistire.com	
MAVIS TIRE EXPRESS SVCS CORP	Goodyear, Cooper	N 1190 MISSOURI AVE	LARGO	PINELLAS	33770	(727) 218-1050	tmoran@mavistire.com	
MAVIS TIRE EXPRESS SVCS CORP	Goodyear, Cooper	650 DOUGLAS RD E	OLDSMAR	PINELLAS	34677	(813) 815-6171	tmoran@mavistire.com	
MAVIS TIRE EXPRESS SVCS CORP	Goodyear, Cooper	601 ALT 19 NORTH	PALM HARBOR	PINELLAS	34683	(727) 491-8489	tmoran@mavistire.com	
MAVIS TIRE EXPRESS SVCS CORP	Goodyear, Cooper	4900 34TH ST S	SAINT PETERSBURG	PINELLAS	33711	(727) 616-3942	tmoran@mavistire.com	
MAVIS TIRE EXPRESS SVCS CORP	Goodyear, Cooper	2701 TYRONE BLVD N	SAINT PETERSBURG	PINELLAS	33710	(727) 347-7223	tmoran@mavistire.com	
MAVIS TIRE EXPRESS SVCS CORP	Goodyear, Cooper	4001 4TH ST N	SAINT PETERSBURG	PINELLAS	33703	(727) 400-3094	tmoran@mavistire.com	
MAVIS TIRE EXPRESS SVCS CORP	Goodyear, Cooper	40200 US HWY 19 N	TARPON SPRINGS	PINELLAS	34689	(727) 943-9939	tmoran@mavistire.com	
MONRO INC	Goodyear, Cooper	235 S BELCHER RD	CLEARWATER	PINELLAS	33765	(727) 799-4800	kyle.peterson@monro.com	
MONRO INC	Goodyear, Cooper	13399 SEMINOLE BLVD	LARGO	PINELLAS	33778	(727) 683-0893	kyle.peterson@monro.com	
MONRO INC	Goodyear, Cooper	2110 S BELCHER RD	LARGO	PINELLAS	33771	(585) 647-6401	kyle.peterson@monro.com	
MONRO INC	Goodyear, Cooper	30780 US 19 N	PALM HARBOR	PINELLAS	34684	(727) 437-4700	kyle.peterson@monro.com	
MONRO INC	Goodyear, Cooper	7511 49TH STREET N	PINELLAS PARK	PINELLAS	33781	(727) 548-0779	kyle.peterson@monro.com	
MONRO INC	Goodyear, Cooper	445 99TH AVE N	SAINT PETERSBURG	PINELLAS	33702	(727) 217-0020	kyle.peterson@monro.com	
MONRO INC	Goodyear, Cooper	456 DR MLK ST N	SAINT PETERSBURG	PINELLAS	33705	(727) 898-8818	kyle.peterson@monro.com	

PEP BOYS #1447	Goodyear, Cooper	29889 US 19 NORTH	CLEARWATER	PINELLAS	33761	(727) 785-2803	scott_grable@pepboys.com	
PEP BOYS #1649	Goodyear, Cooper	6492 PARK BLVD.	PINELLAS PARK	PINELLAS	33781	(727) 541-6154	scott_grable@pepboys.com	
PEP BOYS #1804	Goodyear, Cooper	35061 US HWY 19 NORTH	PALM HARBOR	PINELLAS	34684	(727) 771-6216	scott_grable@pepboys.com	
PEP BOYS #1805	Goodyear, Cooper	13015 SEMINOL BLVD STE 1	LARGO	PINELLAS	33778	(727) 518-6476	scott_grable@pepboys.com	
PEP BOYS #1806	Goodyear, Cooper	1559B GULF TO BAY BLVD	CLEARWATER	PINELLAS	33755	(727) 443-1194	scott_grable@pepboys.com	
PEP BOYS #1807	Goodyear, Cooper	6790 US HWY 19 N	PINELLAS PARK	PINELLAS	33781	(727) 522-5188	scott_grable@pepboys.com	
BOB LEES INC	Goodyear, Cooper	1631 4TH ST N	SAINT PETERSBURG	PINELLAS	33704	(727) 822-3981	don@allamericanautoandtire.com	
LEONE TIRE & AUTO	Goodyear, Cooper	3826 TAMPA RD	OLDSMAR	PINELLAS	34677	(813) 818-7669	Leonetire@gmail.com	
GOODYEAR AUTO SERVICE #2439	Goodyear	390 EAST VAN FLEET DRIVE	BARTOW	POLK	33830	(863) 533-4136	gsr2439@goodyear.com	
GOODYEAR AUTO SERVICE #2472	Goodyear	100 MAXCY PLAZA CIRCLE	HAINES CITY	POLK	33844	(863) 422-4965	gsr2472@goodyear.com	
MAVIS TIRE EXPRESS SVCS CORP	Goodyear, Cooper	8002 OSCEOLAPOLKLINERD	DAVENPORT	POLK	33896	(863) 251-5051	tmoran@mavistire.com	
MAVIS TIRE EXPRESS SVCS CORP	Goodyear, Cooper	35560 HIGHWAY 27	HAINES CITY	POLK	33844	(863) 422-1110	tmoran@mavistire.com	
MAVIS TIRE EXPRESS SVCS CORP	Goodyear, Cooper	4516 FLORIDA AVE S	LAKELAND	POLK	33813	(863) 777-4994	tmoran@mavistire.com	
MAVIS TIRE EXPRESS SVCS CORP	Goodyear, Cooper	5120 DAVE ROBBINS WAY	LAKELAND	POLK	33812	(863) 937-0700	tmoran@mavistire.com	
MAVIS TIRE EXPRESS SVCS CORP	Goodyear, Cooper	6597 N CHURCH ST	MULBERRY	POLK	33860	(863) 425-5400	tmoran@mavistire.com	
MONRO INC	Goodyear, Cooper	28919 US HWY 27	DUNDEE	POLK	33838	(863) 439-8473	kyle.peterson@monro.com	
MONRO INC	Goodyear, Cooper	203 DOMARIS AVE	LAKE WALES	POLK	33853	(863) 676-3423	kyle.peterson@monro.com	
MONRO INC	Goodyear, Cooper	3102 S FLORIDA AVE	LAKELAND	POLK	33803	(863) 644-1027	kyle.peterson@monro.com	
MONRO INC	Goodyear, Cooper	3939 US HWY 98S	LAKELAND	POLK	33812	(585) 647-6400	kyle.peterson@monro.com	
MONRO INC	Goodyear, Cooper	5020 US HWY 98 N	LAKELAND	POLK	33809	(863) 858-4477	kyle.peterson@monro.com	
MONRO INC	Goodyear, Cooper	4304 SOUTH FLORIDA AVE	LAKELAND	POLK	33813	(863) 646-8518	kyle.peterson@monro.com	
MONRO INC	Goodyear, Cooper	3939 US HWY 98 S	LAKELAND	POLK	33812	(863) 667-3347	kyle.peterson@monro.com	
MONRO INC	Goodyear, Cooper	2636 LASSO LANE	LAKELAND	POLK	33801	(863) 665-8473	kyle.peterson@monro.com	
MONRO INC	Goodyear, Cooper	6867 N CHURCH AVE	MULBERRY	POLK	33860	(863) 644-7700	kyle.peterson@monro.com	
MONRO INC	Goodyear, Cooper	1803 3RD STREET SW	WINTER HAVEN	POLK	33880	(863) 401-8473	kyle.peterson@monro.com	
MONRO INC	Goodyear, Cooper	6975 CYPRESS GARDEN BLVD	WINTER HAVEN	POLK	33884	(585) 647-6400	kyle.peterson@monro.com	
PEP BOYS #118	Goodyear, Cooper	4405 U S HWY 98 N	LAKELAND	POLK	33809	(863) 853-3776	scott_grable@pepboys.com	
PEP BOYS #1619	Goodyear, Cooper	6820 S. FLORIDA AVENUE	LAKELAND	POLK	33813	(863) 644-3420	scott_grable@pepboys.com	
PEP BOYS #1686	Goodyear, Cooper	5694 SE CYPRESS GARDENS BLVD	WINTER HAVEN	POLK	33884	(863) 324-1824	scott_grable@pepboys.com	
PEP BOYS #1818	Goodyear, Cooper	5437 US HWY 98 N	LAKELAND	POLK	33809	(863) 853-8692	scott_grable@pepboys.com	
PEP BOYS #8073	Goodyear, Cooper	6800 E STATE RD 33	LAKELAND	POLK	33805	(800) 737-2697	scott_grable@pepboys.com	
ACTION TIRE SERVICE LLC	Goodyear, Cooper	130 KITTO LANE	DUNDEE	POLK	33838	(863) 438-8444	store1@actiontireservices.com	
ST JOHN SUPER SERVICE CENTER	Goodyear, Cooper	608 REID ST	PALATKA	PUTNAM	32177	(386) 328-9231	stjohnsservice@cs.com	
TMT AUTO CLINIC INC	Goodyear, Cooper	1117 SR 20	INTERLACHEN	PUTNAM	32148	(386) 684-1901	tmttires@gmail.com	
GOODYEAR AUTO SERVICE #2250	Goodyear	8460 NAVARRE PKWY	NAVARRE	SANTA ROSA	32566	(850) 936-1200	gsr2250@goodyear.com	
PEP BOYS #1495	Goodyear, Cooper	3113 GULF BREEZE PKWY	GULF BREEZE	SANTA ROSA	32563	(850) 932-6425	scott_grable@pepboys.com	
PEP BOYS #1539	Goodyear, Cooper	6611 CAROLINE ST	MILTON	SANTA ROSA	32570	(850) 623-4377	scott_grable@pepboys.com	
PEP BOYS #1541	Goodyear, Cooper	4128 HWY. 90	PACE	SANTA ROSA	32571	(850) 994-0777	scott_grable@pepboys.com	
LEDDY ENTERPRISES INC	Goodyear	2983 GULF BREEZE PKWY/HWY 98	GULF BREEZE	SANTA ROSA	32563	(850) 932-4250	randyleddy@bellsouth.net	
EAGLE TIRE&SERVICE CENTER LLC	Goodyear, Cooper	6425 HWY 90 W	MILTON	SANTA ROSA	32570	(850) 623-2236	coltssafety42@yahoo.com	
VANNOYS TIRES INC	Goodyear, Cooper	3425 GULF BREEZE PKWY	GULF BREEZE	SANTA ROSA	32563	(850) 916-0912	clay.vannoy@gmail.com	
GOODYEAR AUTO SERVICE #2451	Goodyear	3481 CATTLEMAN BLVD	SARASOTA	SARASOTA	34232	(941) 377-8775	gsr2451@goodyear.com	
GOODYEAR AUTO SERVICE #2453	Goodyear	401 N LEMON AVE	SARASOTA	SARASOTA	34236	(941) 365-5060	gsr2453@goodyear.com	
GOODYEAR AUTO SERVICE #2574	Goodyear	5785 BENEVA RD	SARASOTA	SARASOTA	34233	(941) 923-3364	gsr2574@goodyear.com	
HEARTLAND TIRE INC	Goodyear, Cooper	12145 TAMIAMI TRL	NORTH PORT	SARASOTA	34287	(941) 426-3242	dmitchell788@gmail.com	
MAVIS TIRE EXPRESS SVCS CORP	Goodyear, Cooper	14970 TAMIAMI TRAIL	NORTH PORT	SARASOTA	34287	(941) 423-3211	tmoran@mavistire.com	
MAVIS TIRE EXPRESS SVCS CORP	Goodyear, Cooper	5050 FRUITVILLE RD	SARASOTA	SARASOTA	34232	(941) 343-9487	tmoran@mavistire.com	
MAVIS TIRE EXPRESS SVCS CORP	Goodyear, Cooper	2371 S. TAMIAMI TRAIL	VENICE	SARASOTA	34293	(941) 493-8887	tmoran@mavistire.com	
MONRO INC	Goodyear, Cooper	4480 AIDAN LANE	NORTH PORT	SARASOTA	34287	(941) 426-1019	kyle.peterson@monro.com	
MONRO INC	Goodyear, Cooper	5837 DEREK AVENUE	SARASOTA	SARASOTA	34238	(941) 343-4502	kyle.peterson@monro.com	
MONRO INC	Goodyear, Cooper	4060 S TAMIAMI TRAIL	VENICE	SARASOTA	34293	(941) 441-2504	kyle.peterson@monro.com	
MONRO INC	Goodyear, Cooper	1908 TAMIAMI TRAIL S	VENICE	SARASOTA	34293	(941) 408-1717	kyle.peterson@monro.com	
PEP BOYS #1809	Goodyear, Cooper	4427 BEE RIDGE RD	SARASOTA	SARASOTA	34233	(941) 371-1377	scott_grable@pepboys.com	
PIT STOP FLEET SERVICE INC	Goodyear, Cooper	1841 TAMIAMI TRAIL S	VENICE	SARASOTA	34293	(833) 449-5600	ronaldjperry@comcast.net	
STERNS AUTO SVC & TIRE CTR INC	Goodyear, Cooper	1590 S MCCALL RD	ENGLEWOOD	SARASOTA	34223	(941) 474-2905	rob@sbgtires.com	
GOODYEAR AUTO SERVICE #2523	Goodyear	5535 RED BUG LAKE RD	WINTER SPRINGS	SEMINOLE	32708	(407) 699-5141	gsr2523@goodyear.com	
MAVIS TIRE EXPRESS SVCS CORP	Goodyear, Cooper	4416 LAKE MARY BLVD	LAKE MARY	SEMINOLE	32746	(407) 871-3468	tmoran@mavistire.com	
MAVIS TIRE EXPRESS SVCS CORP	Goodyear, Cooper	1330 ALAFAYA TRAIL	OVIEDO	SEMINOLE	32765	(407) 502-4721	tmoran@mavistire.com	
MAVIS TIRE EXPRESS SVCS CORP	Goodyear, Cooper	385 W MITCHELL HAMMOCK RD	OVIEDO	SEMINOLE	32765	(407) 977-7595	tmoran@mavistire.com	
MAVIS TIRE EXPRESS SVCS CORP	Goodyear, Cooper	4151 W 1ST STREET	SANFORD	SEMINOLE	32771	(407) 269-8167	tmoran@mavistire.com	
MONRO INC	Goodyear, Cooper	318 W MITCHELL HAMMOCK ROAD	OVIEDO	SEMINOLE	32765	(321) 222-3856	kyle.peterson@monro.com	
PEP BOYS #1061	Goodyear, Cooper	2994 ALAFAYA TRAIL	OVIEDO	SEMINOLE	32765	(407) 326-5000	scott_grable@pepboys.com	

PEP BOYS #120	Goodyear, Cooper	1029 E ALTAMONTE DR	ALTAMONTE SPRINGS	SEMINOLE	32701	(407) 339-3385	scott_grable@pepboys.com	
PEP BOYS #1416	Goodyear, Cooper	555 W FIRST STREET	SANFORD	SEMINOLE	32771	(407) 322-2821	scott_grable@pepboys.com	
PEP BOYS #1434	Goodyear, Cooper	710 W. HIGHWAY 436	ALTAMONTE SPRINGS	SEMINOLE	32714	(407) 774-6830	scott_grable@pepboys.com	
PEP BOYS #1435	Goodyear, Cooper	100 S. HIGHWAY 17-92	LONGWOOD	SEMINOLE	32750	(407) 339-4611	scott_grable@pepboys.com	
PEP BOYS #1516	Goodyear, Cooper	907 SOUTH LAKE JESSUP AVE	OVIEDO	SEMINOLE	32765	(407) 366-0202	scott_grable@pepboys.com	
PEP BOYS #1521	Goodyear, Cooper	4170 WEST STATE ROAD 46	SANFORD	SEMINOLE	32771	(407) 322-9896	scott_grable@pepboys.com	
PEP BOYS #1813	Goodyear, Cooper	690 E SEMORAN BLVD	CASSELBERRY	SEMINOLE	32707	(407) 682-9988	scott_grable@pepboys.com	
PEP BOYS #1817	Goodyear, Cooper	4231 N HWY 17-92	SANFORD	SEMINOLE	32773	(407) 321-0339	scott_grable@pepboys.com	
D.G. WILLIAMS	Goodyear, Cooper	1215 S FRENCH AVE	SANFORD	SEMINOLE	32771	(407) 330-3588	dwilli6573@aol.com	
GOODYEAR AUTO SERVICE #2449	Goodyear	512 W GEOFFREY ST	SAINT AUGUSTINE	ST JOHNS	32086	(904) 825-1229	gsr2449@goodyear.com	
PEP BOYS #6630	Goodyear, Cooper	1605 COUNTY ROAD 210	ST AUGUSTINE	ST JOHNS	32095	(904) 429-9575	scott_grable@pepboys.com	
RAYS TIRE & SERVICE CENTER INC	Goodyear	2330 DOBBS RD	SAINT AUGUSTINE	ST JOHNS	32086	(904) 810-5889	raystire@aol.com	
RAYS TIRE & SERVICE CENTER INC	Goodyear	1375 US HWY 1 SOUTH	SAINT AUGUSTINE	ST JOHNS	32084	(904) 829-6418	raystire@aol.com	
GOODYEAR AUTO SERVICE #2521	Goodyear	10475 SO FEDERAL HWY	PORT SAINT LUCIE	ST LUCIE	34952	(772) 398-9052	gsr2521@goodyear.com	
MONRO INC	Goodyear, Cooper	250 NW CASHMERE BLVD	PORT SAINT LUCIE	ST LUCIE	34986	(772) 408-1950	kyle.peterson@monro.com	
MONRO INC	Goodyear, Cooper	2010 SW BAYSHORE BLVD	PORT SAINT LUCIE	ST LUCIE	34984	(772) 408-1251	kyle.peterson@monro.com	
PEP BOYS #1827	Goodyear, Cooper	2903 S US HWY 1	FORT PIERCE	ST LUCIE	34982	(772) 595-5230	scott_grable@pepboys.com	
TIRESOLES	Goodyear, Cooper	6101 ORANGE AVE	FORT PIERCE	ST LUCIE	34947	(772) 464-4211	astafford@tiresoles.com	
MAVIS TIRE EXPRESS SVCS CORP	Goodyear, Cooper	4243 E COUNTY ROAD 466	OXFORD	SUMTER	34484	(352) 571-2256	tmoran@mavistire.com	
MAVIS TIRE EXPRESS SVCS CORP	Goodyear, Cooper	5167 SUNDANCE TRAIL	WILDWOOD	SUMTER	34785	(352) 571-2441	tmoran@mavistire.com	
MONRO INC	Goodyear, Cooper	280 COLONY BLVD	THE VILLAGES	SUMTER	32162	(352) 430-0043	kyle.peterson@monro.com	
MONRO INC	Goodyear, Cooper	45 LAGRANDE BLVD	THE VILLAGES	SUMTER	32159	(352) 391-6488	kyle.peterson@monro.com	
MONRO INC	Goodyear, Cooper	3949 WEDGEWOOD LANE	THE VILLAGES	SUMTER	32162	(352) 391-1001	kyle.peterson@monro.com	
PEP BOYS #1698	Goodyear, Cooper	8697 SE 165TH MULBERRY LANE	THE VILLAGES	SUMTER	32162	(352) 205-7746	scott_grable@pepboys.com	
BUSHNELL TIRE CO	Goodyear, Cooper	322 NORTH MAIN ST	BUSHNELL	SUMTER	33513	(352) 793-7822	jhatcher@aol.com	
CRIBBS & SONS INC	Goodyear, Cooper	1005 S JEFFERSON STREET	PERRY	TAYLOR	32348	(850) 584-3883	revroper@hotmail.com	
MAVIS TIRE EXPRESS SVCS CORP	Goodyear, Cooper	4831 CLYDE MORRIS BLVD	PORT ORANGE	VOLUSIA	32129	(386) 756-8889	tmoran@mavistire.com	
MONRO INC	Goodyear, Cooper	148 N RIDGEWOOD AVE	DAYTONA BEACH	VOLUSIA	32114	(386) 252-7661	kyle.peterson@monro.com	
MONRO INC	Goodyear, Cooper	680 N SPRING GARDEN AVE	DELAND	VOLUSIA	32720	(386) 740-8996	kyle.peterson@monro.com	
MONRO INC	Goodyear, Cooper	1445 S DIXIE FWY	NEW SMYRNA BEACH	VOLUSIA	32168	(386) 428-5784	kyle.peterson@monro.com	
PEP BOYS #1433	Goodyear, Cooper	2835 S. WOODLAND BLVD	DELAND	VOLUSIA	32720	(386) 943-9299	scott_grable@pepboys.com	
PEP BOYS #1436	Goodyear, Cooper	234 W. GRANADA BLVD	ORMOND BEACH	VOLUSIA	32174	(386) 677-5037	scott_grable@pepboys.com	
PEP BOYS #163	Goodyear, Cooper	2220 W. INTERNATIONAL SPEEDWAY	DAYTONA BEACH	VOLUSIA	32114	(386) 255-6390	scott_grable@pepboys.com	
PEP BOYS #1825	Goodyear, Cooper	310 RIDGEWOOD AVE	HOLLY HILL	VOLUSIA	32117	(386) 262-1664	scott_grable@pepboys.com	
PEP BOYS #1826	Goodyear, Cooper	722 S WOODLAND BLVD	DELAND	VOLUSIA	32720	(386) 337-3530	scott_grable@pepboys.com	
JA TIRE INC	Goodyear	5120 S CLYDE MORRIS BLVD	PORT ORANGE	VOLUSIA	32127	(386) 761-0010	jayres_1@yahoo.com	
4 BOYS ENTERPRISES INC	Goodyear, Cooper	424 S NOVA RD	DAYTONA BEACH	VOLUSIA	32114	(386) 258-1051	04tires@gmail.com	
GOODYEAR AUTO SERVICE #2248	Goodyear	12340 EMERALD COAST PARKWAY W	MIRAMAR BEACH	WALTON	32550	(850) 269-2522	gsr2248@goodyear.com	
NATIONAL TIRE BROKERS	Goodyear, Cooper	829 US HIGHWAY 90 W	DEFUNIAK SPRINGS	WALTON	32433	(850) 892-5191	jeffntbc@gdsys.net	

FSA TIRE CONTRACT: FSA25-TRS27.0

TIRE MANUFACTURER AUTHORIZED SALES AND SERVICE CENTERS

MANUFACTURER NAME: _____ Toyo Tire USA Corp
MANUFACTURER FEIN #: _____ 95-2452102

Manufacturer Authorized Sales & Service Center Name	Tire Brands	Street Address	City	County	Zip Code	Telephone #	E-Mail To Accept Purchase Orders	MWBE Status (if available) Y = MWBE
Callaghan Tire	Toyo Tires	1511 38th Ave	Bradenton	Manatee	34208	941.448.6954	gkortzendorf@callaghantire.com	N/A
Callaghan Tire	Toyo Tires	11940 44th St N	Clearwater	Pinellas	33762	863.581.6958	rbyrd@callaghantire.com	N/A
Callaghan Tire	Toyo Tires	2203 Alicia St	Ft Myers	Lee	33901	941.448.6954	gkortzendorf@callaghantire.com	N/A
Callaghan Tire	Toyo Tires	7075 W 12 St	Jacksonville	Duval	29506	904.237.6617	wowens@callaghantire.com	N/A
Callaghan Tire	Toyo Tires	3035 E Main St	Lakeland	Polk	33801	863.581.6958	rbyrd@callaghantire.com	N/A
Callaghan Tire	Toyo Tires	3600 NW 54th St	Miami	Miami-Dade	29501	561.707.3594	lcarmenini@callaghantire.com	N/A
Callaghan Tire	Toyo Tires	5791 Taylor Road	Naples	Collier	34109	941.448.6954	gkortzendorf@callaghantire.com	N/A
Callaghan Tire	Toyo Tires	211 SW 33rd Ave	Ocala	Marion	34474	904.237.6617	wowens@callaghantire.com	N/A
Callaghan Tire	Toyo Tires	891 W 13th St	Riviera Beach	Palm Beach	33404	561.707.3594	lcarmenini@callaghantire.com	N/A
Callaghan Tire	Toyo Tires	6425 Causeway Blvd	Tampa	Hillsborough	33619	863.581.6958	rbyrd@callaghantire.com	N/A
DISCOUNT TIRE	Toyo Tires	2150 E Semoran Blvd	Apopka	Orange	32703-572	407-889-9113		N/A
DISCOUNT TIRE	Toyo Tires	16407 Sr 50	Clermont	Lake	34711-768	407-654-0415		N/A
DISCOUNT TIRE	Toyo Tires	42305 HIGHWAY 27	DAVENPORT	Polk	33837			N/A
DISCOUNT TIRE	Toyo Tires	5860 S. UNIVERSITY DRIVE	DAVIE	Broward	33328	954-331-1994		N/A
DISCOUNT TIRE	Toyo Tires	1051 Beville Rd	Daytona Beach	Volusia	32119-160	386-760-0633		N/A
DISCOUNT TIRE	Toyo Tires	140 GARDEN ST S	DAYTONA BEACH	Volusia	32127	386-627-7108		N/A
DISCOUNT TIRE	Toyo Tires	210 E INTERNATIONAL SPEEDW	DELAND	Volusia	32724-2340			N/A
DISCOUNT TIRE	Toyo Tires	8341 DANI DR	FORT MYERS	Lee	33966-800	239-286-6877		N/A
DISCOUNT TIRE	Toyo Tires	3003 SW 34th St	Gainesville	Alachua	32608-173	352-491-2812		N/A
DISCOUNT TIRE	Toyo Tires	5990 LAKE WORTH RD	GREENACRES	Palm Beach	33463			N/A
DISCOUNT TIRE	Toyo Tires	9440 Atlantic Blvd	Jacksonville	Duval	32225-822	904-724-0945		N/A
DISCOUNT TIRE	Toyo Tires	5175 LENOX AVE	JACKSONVILLE	Duval	32205-483	904-378-9282		N/A
DISCOUNT TIRE	Toyo Tires	560 Skymarks Dr	Jacksonville	Duval	32218-725	904-757-6760		N/A
DISCOUNT TIRE	Toyo Tires	13840 Beach Blvd	Jacksonville	Duval	32224-121	904-821-0982		N/A
DISCOUNT TIRE	Toyo Tires	8080 Philips Hwy #300	Jacksonville	Duval	32256-740	904-636-7576		N/A
DISCOUNT TIRE	Toyo Tires	7273 103rd St	Jacksonville	Duval	32210-670	904-831-5416		N/A
DISCOUNT TIRE	Toyo Tires	11567 SAN JOSE BLVD.	JACKSONVILLE	Duval	32223	904-380-3182		N/A
DISCOUNT TIRE	Toyo Tires	1608 W Osceola Pkwy #300	Kissimmee	Osceola	34741-072	407-870-0217		N/A
DISCOUNT TIRE	Toyo Tires	1867 W Us Highway 90	Lake City	Columbia	32055-471	386-243-6968		N/A

DISCOUNT TIRE	Toyo Tires	3860 FLAGG LN.	LAKE MARY	Seminole	32746-540	407-562-0344		N/A
DISCOUNT TIRE	Toyo Tires	6975 Us Highway 98 N	Lakeland	Polk	33809-213	863-797-1236		N/A
DISCOUNT TIRE	Toyo Tires	1567 BRANAN FIELD RD	MIDDLEBURG	Clay	32068-842	904-589-9874		N/A
DISCOUNT TIRE	Toyo Tires	18465 US HIGHWAY 441	MOUNT DORA	Lake	32757			N/A
DISCOUNT TIRE	Toyo Tires	2701 SW College Rd Ste 800	Ocala	Marion	34474-844	352-351-4327		N/A
DISCOUNT TIRE	Toyo Tires	151 Blanding Blvd	Orange Park	Clay	32073-262	904-276-2013		N/A
DISCOUNT TIRE	Toyo Tires	1509 County Road 220	Orange Park	Clay	32003-792	904-682-0017		N/A
DISCOUNT TIRE	Toyo Tires	986 N Semoran Blvd	Orlando	Orange	32807-352	407-380-2036		N/A
DISCOUNT TIRE	Toyo Tires	6242 W Colonial Dr	Orlando	Orange	32808-752	407-295-6433		N/A
DISCOUNT TIRE	Toyo Tires	8107 S John Young Pkwy	Orlando	Orange	32819-902	407-226-3276		N/A
DISCOUNT TIRE	Toyo Tires	330 S Alafaya Trl	Orlando	Orange	32828-891	407-275-8133		N/A
DISCOUNT TIRE	Toyo Tires	13145 S ORNAGE BLOOSOM TR	ORLANDO	Orange	32837			N/A
DISCOUNT TIRE	Toyo Tires	12061 NARCOOSSEE RD.	ORLANDO	Orange	32832			N/A
DISCOUNT TIRE	Toyo Tires	986 N Semoran Blvd	Orlando	Orange	32807-352	407-382-7029		N/A
DISCOUNT TIRE	Toyo Tires	175 Williamson Blvd	Ormond Beach	Volusia	32174-816	386-671-9022		N/A
DISCOUNT TIRE	Toyo Tires	175 WILLIAMSON BLVD	ORMOND BEACH	Volusia	32174	866-895-8032		N/A
DISCOUNT TIRE	Toyo Tires	5036 HWY 90	PACE	Santa Rosa	32571	850-463-9247		N/A
DISCOUNT TIRE	Toyo Tires	5860 E HIGHWAY 100	PALM COAST	Flagler	32164-2446			N/A
DISCOUNT TIRE	Toyo Tires	528 E 23RD ST	PANAMA CITY	BAY COUNTY	32405			N/A
DISCOUNT TIRE	Toyo Tires	5315 N Davis Hwy	Pensacola	ESCAMBIA COUNTY	32503-200	850-462-6990		N/A
DISCOUNT TIRE	Toyo Tires	4900 MOBILE HWY	PENSACOLA	ESCAMBIA COUNTY	32505	850-316-3795		N/A
DISCOUNT TIRE	Toyo Tires	3700 S Fiske Blvd	Rockledge	Brevard	32955-450	321-615-9033		N/A
DISCOUNT TIRE	Toyo Tires	2449 State Road 16	SAINT AUGUSTINE	St Johns	32092-070	904-417-9703		N/A
DISCOUNT TIRE	Toyo Tires	4290 13TH ST.	SAINT CLOUD	Osceola	34769	407-556-0113		N/A
DISCOUNT TIRE	Toyo Tires	390 DURBIN PAVILION DR	SAINT JOHNS	St Johns	32259	904-506-6079		N/A
DISCOUNT TIRE	Toyo Tires	3513 Orlando Dr	Sanford	Seminole	32773-560	407-330-3889		N/A
DISCOUNT TIRE	Toyo Tires	212 N Magnolia Dr	Tallahassee	Leon	32301-263	850-878-8473		N/A
DISCOUNT TIRE	Toyo Tires	1507 Killearn Center Blvd	Tallahassee	Leon	32309-343	850-894-8473		N/A
DISCOUNT TIRE	Toyo Tires	4655 SOUTH ST	TITUSVILLE	Brevard	32780	321-603-6530		N/A
DISCOUNT TIRE	Toyo Tires	119 S STATE ROAD 7	WELLINGTON	Palm Beach	33414	561-530-6227		N/A
DISCOUNT TIRE	Toyo Tires	4365 Norfolk Pkwy	West Melbourne	Brevard	32904-860	321-409-0190		N/A
DISCOUNT TIRE	Toyo Tires	2629 WESTON RD	WESTON	Broward	33331-361	954-807-5878		N/A
DISCOUNT TIRE	Toyo Tires	5686 Roosevelt Dr	Winter Haven	Polk	33884-210	863-326-1614		N/A
MAVIS - 0557 HOMOSASSA	Toyo Tires	3727 SOUTH SUNCOAST BLVD	HOMOSASSA	Citrus	34448	352-453-0714		N/A
MAVIS - 0735 KISSIMMEE	Toyo Tires	831 N. OLD LAKE WILSON RD.	KISSIMMEE	Osceola	34747	813-553-6225		N/A
MAVIS - 1230 HAMMOCK RIDGE	Toyo Tires	1602 HAMMOCK RIDGE ROAD	CLERMONT	Lake	34711	(352) 708-3435		N/A
MAVIS - 1231 CLERMONT	Toyo Tires	591 E. HIGHWAY 50	CLERMONT	Lake	34711	(352)702-4532		N/A
MAVIS - 1232 BRADENTON	Toyo Tires	15209 GARNET TRAIL	BRADENTON	Manatee	34211			N/A
MAVIS - 1233 APOPKA	Toyo Tires	2213 E. SEMORAN BOULEVARD	APOPKA	Orange	32703	(407) 502-4697		N/A
MAVIS - 1234 OCOEE	Toyo Tires	11203 W. COLONIAL DRIVE	OCOEE	Marion	34761	(407) 439-2815		N/A
MAVIS - 1235 LEE ROAD	Toyo Tires	1717 LEE ROAD	ORLANDO	Orange	32810	(407)641-4202		N/A
MAVIS - 1236 ORANGE AVE	Toyo Tires	4698 S. ORANGE AVENUE	ORLANDO	Orange	32806	(407) 269-8762		N/A
MAVIS - 1237 S ORANGE BLOSSOM	Toyo Tires	11231 S. ORANGE BLOSSOM TR	ORLANDO	Orange	32837	(407) 915-3756		N/A
MAVIS - 1238 ALAFAYA TRAIL	Toyo Tires	300 S. ALAFAYA TRAIL	ORLANDO	Orange	32828	(407) 966-2305		N/A
MAVIS - 1239 CARE CARE DRIVE	Toyo Tires	1000 CAR CARE DRIVE	ORLANDO	Orange	32836	(407) 824-0976		N/A

MAVIS - 1240 ORLANDO	Toyo Tires	14373 NARCOOSSEE ROAD	ORLANDO	Orange	32832	(407) 707-8637		N/A
MAVIS - 1241 DARYL CARTER PKWY	Toyo Tires	11571 DARYL CARTER PKWY	ORLANDO	Orange	32821			N/A
MAVIS - 1242 WINDERMERE	Toyo Tires	11685 SILVERLAKE PARK DRIVE	WINDERMERE	Orange	34786	(407)392-9168		N/A
MAVIS - 1243 WINTER GARDEN	Toyo Tires	5185 HAMLIN GROVES TRAIL	WINTER GARDEN	Orange	34787	(407) 347-3239		N/A
MAVIS - 1244 FAIRBANKS AVE	Toyo Tires	1070 W. FAIRBANKS AVENUE	WINTER PARK	Orange	32789	(407) 269-8143		N/A
MAVIS - 1245 KISSIMMEE	Toyo Tires	4135 W. VINE STREET	KISSIMMEE	Osceola	34741	(407) 543-1718		N/A
MAVIS - 1246 SAINT CLOUD	Toyo Tires	4550 13TH STREET	ST. CLOUD	Osceola	34769	(407) 809-3105		N/A
MAVIS - 1247 DAVENPORT	Toyo Tires	8002 OSCEOLA POLK LINE RD.	DAVENPORT	Polk	33896	(863)251-5051		N/A
MAVIS - 1248 LAKELAND	Toyo Tires	4516 FLORIDA AVE S	LAKELAND	Polk	33813	(863) 777-4994		N/A
MAVIS - 1249 LAKE MARY	Toyo Tires	4416 LAKE MARY BOULEVARD	LAKE MARY	Seminole	32746	(407) 871-3468		N/A
MAVIS - 1250 OVIEDO	Toyo Tires	1330 ALAFAYA TRAIL	OVIEDO	Seminole	32765	(407) 502-4721		N/A
MAVIS - 1251 SANFORD	Toyo Tires	41581 W. 1ST STREET	SANFORD	Seminole	32771	(407) 269-8167		N/A
MAVIS - 1252 WINTER PARK	Toyo Tires	2040 FL 436	WINTER PARK	Orange	32792	(407)543-0366		N/A
MAVIS - 1253 OXFORD	Toyo Tires	4243 E COUNTY ROAD 466	OXFORD	Sumter	34484	(352) 399-2046		N/A
MAVIS - 1254 WILDWOOD	Toyo Tires	5167 SUNDANCE TRAIL	WILDWOOD	Sumter	34785			N/A
MAVIS - 1255 LAKE NONA	Toyo Tires	14373 NARCOOSSEE ROAD	ORLANDO	Orange	32832	689-240-1517		N/A
MAVIS - 1256 JOHN YOUNG PKWY	Toyo Tires	4111 N. JOHN YOUNG PARKWA	ORLANDO	Orange	32804	(407) 295-3535		N/A
MAVIS - 1257 THORPE ROAD	Toyo Tires	333 THORPE ROAD	ORLANDO	Orange	32824	(407) 816-8143		N/A
MAVIS - 1260 DUNDEE	Toyo Tires	130 KITTO LANE	DUNDEE	Polk	33838	(863) 438-8444		N/A
MAVIS - 1262 OCALA	Toyo Tires	4949 W. HIGHWAY 40	OCALA	Marion	34482	(352) 390-8880		N/A
MAVIS - 1750 NEWBERRY	Toyo Tires	14145 W. NEWBERRY RD. STE.	NEWBERRY	Alachua	32669	(352)332-0500		N/A
MAVIS - 1751 MELBOURNE	Toyo Tires	7195 DOLINA COURT	MELBOURNE	Brevard	32940	321-259-8494		N/A
MAVIS - 1752 NAPLES	Toyo Tires	7445 VANDERBILT BEACH ROAI	NAPLES	Collier	34119	239-304-2072		N/A
MAVIS - 1753 PALM COAST	Toyo Tires	1430 PALM COAST PKWY NW	PALM COAST	Flagler	32137	(386)597-4788		N/A
MAVIS - 1754 SPRING HILL	Toyo Tires	1280 COMMERCIAL WAY	SPRING HILL	Hernando	34606	(352)600-7971		N/A
MAVIS - 1755 MT. DORA	Toyo Tires	16750 US HWY 441	MT. DORA	Lake	32757	(352)383-4994		N/A
MAVIS - 1756 SUMMERFIELD	Toyo Tires	16676 US HIGHWAY 441	SUMMERFIELD	Marion	34491	(352)693-2245		N/A
MAVIS - 1757 HAINES CITY	Toyo Tires	35560 HIGHWAY 27	HAINES CITY	Polk	33844	(863)422-1110		N/A
MAVIS - 1758 MULBUERRY	Toyo Tires	6597 N. CHURCH STREET	MULBERRY	Polk	33860	863-425-5400		N/A
MAVIS - 1773 NORTH PORT	Toyo Tires	14970 TAMIAMI TRAIL	NORTH PORT	Sarasota	34287	(941)423-3211		N/A
MAVIS - 1774 SARASOTA	Toyo Tires	5050 FRUITVILLE RD	SARASOTA	Sarasota	34232	(941)343-9487		N/A
MAVIS - 1778 LAND O LAKES	Toyo Tires	3530 LAND O LAKES BLVD.	LAND O LAKES	Pasco	34639	813-996-2290		N/A
MAVIS - 1783 FLETCHER	Toyo Tires	1130 E FLETCHER AVE	TAMPA	Hillsborough	33612	813-980-0792		N/A
MAVIS - 1784 TARPON SPRINGS	Toyo Tires	40200 US HWY 19 N	TARPON SPRINGS	Pinellas	34689	727-943-9939		N/A
MAVIS - 1785 VENICE	Toyo Tires	2371 S TAMIAMI TRAIL	VENICE	Sarasota	34293	941-493-8887		N/A
MAVIS - 1786 PORT CHARLOTTE	Toyo Tires	2572 TAMIAMI TRAIL	PORT CHARLOTTE	Charlotte	33952	941-764-9815		N/A
MAVIS - 1787 METRO WEST	Toyo Tires	5645 METRO WEST BLVD	ORLANDO	Orange	32811	407-532-7874		N/A
MAVIS - 1794 BRADENTON	Toyo Tires	6025 STATE ROAD 70 EAST	BRADENTON	Manatee	34203	(941) 751-1818		N/A
MAVIS - 1795 PORT ORANGE	Toyo Tires	4831 CLYDE MORRIS BVLD	PORT ORANGE	Volusia	32129	386-756-8889		N/A
MAVIS - 1796 WESLEY CHAPEL	Toyo Tires	27303 WESLEY CHAPEL BLVD.	WESLEY CHAPEL	Pasco	33544	813-907-5200		N/A
MAVIS - 1798 NARCOOSSEE	Toyo Tires	7444 NARCOOSSEE RD #430	ORLANDO	Orange	32822	407-208-0004		N/A
MAVIS - 1799 CAPE CORAL	Toyo Tires	1335 DEL PRADO BLVD. SOUTH	CAPE CORAL	Lee	33990	352-474-5558		N/A
MAVIS - 1800 APOPKA	Toyo Tires	1675 E SEMORA BLVD	APOPKA	Orange	32703	(407) 884-4441		N/A
MAVIS - 1801 Semoran	Toyo Tires	1222 North Semoran Blvd.	Orlando	Orange	32807	407-207-4045		N/A
MAVIS - 1802 OVIEDO	Toyo Tires	385 W MITCHEL HAMMOCK RD	OVIEDO	Seminole	32765	(321) 348-4720		N/A
MAVIS - 1803 Jacksonville	Toyo Tires	14026 Beach Blvd.	Jacksonville	Duval	32250	904-992-4176		N/A
MAVIS - 1804 RIVERVIEW	Toyo Tires	10209 BIG BEND RD	RIVERVIEW	Hillsborough	33578	863-578-8804		N/A

MAVIS - 1807 WINTER HAVEN	Toyo Tires	6906 CYPRESS GARDEN BLVD	WINTER HAVEN	Polk	33884	863-319-8339		N/A
MAVIS - 1808 Pensacola	Toyo Tires	9350 University Pkwy	Pensacola	ESCAMBIA COUNTY	32514	850-478-8884		N/A
MAVIS - 1810 LANDSTAR	Toyo Tires	13466 LANDSTAR BLVD	ORLANDO	Orange	32824	321-710-9756		N/A
MAVIS - 1811 PORT RICHEY	Toyo Tires	5049 LITTLE ROAD	NEW PORT RICHEY	Pasco	34655	727-203-5316		N/A
MAVIS - 1812 DESTIN	Toyo Tires	4604 OPA LOCKA LANE	DESTIN	Okaloosa	32541	850-269-2300		N/A
MAVIS - 1813 GULF BREEZE	Toyo Tires	3737 GULF BREEZE PKWY	GULF BREEZE	Santa Rosa	32563	850-934-08839		N/A
MAVIS - 1814 MARY ESTHER	Toyo Tires	141 W. MIRACLE STRIP PKWY	MARY ESTHER	Okaloosa	32569	850-243-2544		N/A
MAVIS - 2003 BELLEVIEW	Toyo Tires	4441 SE 102ND PL	BELLEVIEW	Marion	34420	352-719-4271		N/A
Mavis - 2012 Alachua	Toyo Tires	16113 NW Hwy 411	Alacjua	Alachua	32615	386-324-3302		N/A
MAVIS - 2014 ST. PETERSBURG	Toyo Tires	4900 E 34th St	ST. PETERSBURG	Pinellas	37711	727-440-5435		N/A
MAVIS - 2017 PARRISH	Toyo Tires	8268 US-301	PARRISH	Manatee	34219	941-531-1003		N/A
MAVIS - 2028 SAINT CLOUD	Toyo Tires	1940 S NARCOOSSEE RD	SAINT CLOUD	Osceola	34771	689-214-6884		N/A
MAVIS - 2029 LANDSTAR	Toyo Tires	13995 LANDSTAR BLVD.	ORLANDO	Orange	32824	689-257-5856		N/A
MAVIS - 2063 - FLAGLER BEACH	Toyo Tires	2450 MOODY BLVD.	FLAGLER BEACH	Flagler	32136	386-693-9070		N/A
MAVIS - 2065 LARGO	Toyo Tires	13702 WALSINGHAM RD	LARGO	Pinellas	33774	727-516-6557		N/A
MAVIS - 2090 DELAND	Toyo Tires	144 FREEWAY	DELAND	Volusia	32720	386-414-8555		N/A
MAVIS - 2097 PALM BAY	Toyo Tires	3380 BAYSIDE LAKES BLVD, SE	PALM BAY	Brevard	32909	(321) 405-3297		N/A
MAVIS - 2122 GIBSONTON	Toyo Tires	9324 THEATER DR	GIBSONTON	Hillsborough	33534	(813) 302-1192		N/A
MAVIS - 2159 ROCKLEDGE	Toyo Tires	3854 MURRELL ROAD	ROCKLEDGE	Brevard	32955	(321) 261-0667		N/A
MAVIS - 2169 LAKELAND	Toyo Tires	5325 N. SOCRUM LOOP RD	LAKELAND	Polk	33809	863-225-7464		N/A
MAVIS - 297 YULEE	Toyo Tires	463697 STATE ROAD 200	YULEE	Nassau	32097	904-441-1704		N/A
Mavis - 3002 River City	Toyo Tires	15202 Max Leggett Pkwy	Jacksonville	Duval	32218	904-379-4274		N/A
Mavis - 3003 Beach Boulevard	Toyo Tires	13985 Beach Blvd	Jacksonville	Duval	32224	904-379-0267		N/A
Mavis - 3004 San Jose	Toyo Tires	11839 San Jose Blvd	Jacksonville	Duval	32223	904-551-7677		N/A
MAVIS - 3035 PANAMA CITY	Toyo Tires	1417 CLAY AVE	PANAMA CITY	BAY COUNTY	32401	850-898-1196		N/A
MAVIS - 3058 PANAMA CITY	Toyo Tires	11620 PANAMA CITY BEACH PK	PANAMA CITY BEACH	BAY COUNTY	32407	850-233-0808		N/A
MAVIS - 3071 DESTIN	Toyo Tires	36100 EMERALD COAST PKWY	DESTIN	Okaloosa	32541	850-837-4000		N/A
MAVIS - 3085 AMELIA CONCOURSE	Toyo Tires	463821 STATE RD 200	YULEE	Nassau	32097	904-849-5515		N/A
MAVIS - 3100 FORT WALTON	Toyo Tires	771 BEAL PKWY NW	FORT WALTON BEACH	Okaloosa Count	32547	(850)863-4447		N/A
MAVIS - 3101 CRESTVIEW	Toyo Tires	2053 S FERDON BLVD.	CRESTVIEW	okaloosa	32536	(850)398-8505		N/A
MAVIS - 3102 DEFUNIAK SPRINGS	Toyo Tires	760 US HIGHWAY 331 S	DEFUNIAK SPRINGS	Walton	32435	(850)520-4406		N/A
MAVIS - 3103 NAVARRE BEACH	Toyo Tires	9028 NAVARRE PKWY	NAVARRE	Santa Rosa	32566	(850)710-7088		N/A
MAVIS - 3117 TIGER POINT	Toyo Tires	3352 GULF BREEZE PKWY	GULF BREEZE	Santa Rosa	32563	850-565-9775		N/A
MAVIS - 3149 KISSIMMEE	Toyo Tires	1050 W. OSCEOLA PKWY	KISSIMMEE	Osceola	34741	407-935-9001		N/A
MAVIS - 3153 NINE MILE	Toyo Tires	1650 EAST NINE MILE RD.	PENSACOLA	ESCAMBIA COUNTY	32514	850-478-0120		N/A
MAVIS - 3154 PENSACOLA	Toyo Tires	6200 NORTH 9TH AVE	PENSACOLA	ESCAMBIA COUNTY	32504	850-477-0337		N/A
MAVIS - 3155 PACE	Toyo Tires	4640 HWY 90	PACE	Santa Rosa	32571	850-736-8044		N/A
MAVIS - 3164 SAUTH WALTON	Toyo Tires	2098 US Hwy 98	SANTA ROSA BEACH	Walton	32459	850-608-6122		N/A
MAVIS - 3192 Oviedo	Toyo Tires	1120 Alafaya Trail	Oviedo	Seminole	32765	407-542-8645		N/A
MAVIS - 3208 NICEVILLE	Toyo Tires	1501 JOHN SMIS PKWY EAST	NICEVILLE	Okaloosa	32578	850-517-1016		N/A
MAVIS - 377 JACKSONVILLE	Toyo Tires	910 DUNN AVE	JACKSONVILLE	Duval	32218	(904)515-4550		N/A
MAVIS - 386 JACKSONVILLE BEACH	Toyo Tires	1178 3RD ST SOUTH	JACKSONVILLE BEACH	Duval	32250	904-694-2600		N/A
MAVIS - 387 SPRING HILL	Toyo Tires	119 MARINER BLVD	SPRING HILL	Hernando	34606	352-587-5670		N/A
MAVIS - 4001 ALTAMONTE SPRINGS	Toyo Tires	457 W HIGHWAY 436	ALTAMONTE SPRINGS	Seminole	32714	(407) 682-6661		N/A
MAVIS - 4002 APOPKA	Toyo Tires	1651 W ORANGE BLOSSOM TRL	APOPKA	Orange	32712	(407) 880-8600		N/A

MAVIS - 4003 AUBURNDALE	Toyo Tires	1015 US HIGHWAY 92 W	AUBURNDALE	Polk	33823	(863) 967-3355		N/A
MAVIS - 4004 BOCA RATON	Toyo Tires	121 NW SPANISH RIVER BOULE	BOCA RATON	Palm Beach	33431	(561) 368-5663		N/A
MAVIS - 4005 BOCA RATON	Toyo Tires	199 NW 1ST AVENUE	BOCA RATON	Palm Beach	33432	(561) 367-4595		N/A
MAVIS - 4006 BOCA RATON	Toyo Tires	19571 STATE ROAD 7	BOCA RATON	Palm Beach	33498	(561) 477-8210		N/A
MAVIS - 4007 BONITA SPRINGS	Toyo Tires	28090 IMPERIAL ST	BONITA SPRINGS	Lee	34135	(239) 948-1830		N/A
MAVIS - 4008 BOYNTON	Toyo Tires	3030 S CONGRESS AVE	BOYNTON	Palm Beach	33426	(561) 737-6500		N/A
MAVIS - 4009 BRADENTON	Toyo Tires	7390 52ND PL E	BRADENTON	Manatee	34203	(941) 755-6755		N/A
MAVIS - 4010 BRADENTON	Toyo Tires	6011 14TH STREET W	BRADENTON	Manatee	34207	(941) 753-4667		N/A
MAVIS - 4011 BRADENTON	Toyo Tires	5206 CORTEZ RD	BRADENTON	Manatee	34210	(941) 792-5958		N/A
MAVIS - 4012 BRADENTON	Toyo Tires	8347 FLORIDA 64	BRADENTON	Manatee	34212	(941) 932-8990		N/A
MAVIS - 4013 BRANDON	Toyo Tires	1527 E BRANDON BLVD	BRANDON	Hillsborough	33511	(813) 653-2227		N/A
MAVIS - 4014 BROOKSVILLE	Toyo Tires	12161 CORTEZ BLVD	BROOKSVILLE	Hernando	34613	(352) 597-1099		N/A
MAVIS - 4015 CAPE CORAL	Toyo Tires	4503 DEL PRADO BLVD S	CAPE CORAL	Lee	33904	(239) 945-0031		N/A
MAVIS - 4016 CAPE CORAL	Toyo Tires	2517 SKYLINE BLVD	CAPE CORAL	Lee	33914	(239) 268-7758		N/A
MAVIS - 4017 CAPE CORAL	Toyo Tires	1028 DEL PRADO BLVD	CAPE CORAL	Lee	33990	(239) 772-1868		N/A
MAVIS - 4018 CLERMONT	Toyo Tires	1210 OAKLEY SEAVER DR	CLERMONT	Lake	34711	(352) 241-8185		N/A
MAVIS - 4019 CLERMONT	Toyo Tires	229 HIGHWAY 27 N	CLERMONT	Lake	34714	(352) 241-6594		N/A
MAVIS - 4020 CORAL SPRINGS	Toyo Tires	8181 WILES RD	CORAL SPRINGS	Broward	33067	(954) 344-6603		N/A
MAVIS - 4021 CRYSTAL RIVER	Toyo Tires	750 NE 5TH ST	CRYSTAL RIVER	Citrus	34429	(352) 795-9585		N/A
MAVIS - 4022 DAVENPORT	Toyo Tires	8093 LAKE WILSON ROAD	DAVENPORT	Polk	33896	(863) 236-3068		N/A
MAVIS - 4023 DAVIE	Toyo Tires	6595 NOVA DRIVE	DAVIE	Broward	33317	(954) 472-8606		N/A
MAVIS - 4024 DAVIE	Toyo Tires	13760 W STATE ROAD 84	DAVIE	Broward	33325	(954) 370-1140		N/A
MAVIS - 4025 DAYTONA BEACH	Toyo Tires	1250 BEVILLE ROAD	DAYTONA BEACH	Volusia	32114	(386) 523-2000		N/A
MAVIS - 4026 DEERFIELD BEACH	Toyo Tires	100 E HILLSBORO BLVD	DEERFIELD BEACH	Broward	33441	(954) 426-6300		N/A
MAVIS - 4027 DELAND	Toyo Tires	2612 S WOODLAND BLVD	DELAND	Volusia	32720	(386) 943-8608		N/A
MAVIS - 4028 DELAND	Toyo Tires	1615 N WOODLAND BLVD	DELAND	Volusia	32720	(386) 736-2123		N/A
MAVIS - 4029 DELRAY BEACH	Toyo Tires	220 LINTON BLVD	DELRAY BEACH	Palm Beach	33444	(561) 272-1212		N/A
MAVIS - 4030 DELRAY BEACH	Toyo Tires	14115 S MILITARY TRAIL	DELRAY BEACH	Palm Beach	33484	(561) 496-1660		N/A
MAVIS - 4031 DORAL	Toyo Tires	2401 NW 87TH AVE	DORAL	Miami-Dade	33172	(305) 477-1499		N/A
MAVIS - 4032 DUNEDIN	Toyo Tires	1901 MAIN ST	DUNEDIN	Pinellas	34698	(727) 738-1414		N/A
MAVIS - 4034 EUSTIS	Toyo Tires	16200 US HIGHWAY 441	EUSTIS	Lake	32726	(352) 357-1133		N/A
MAVIS - 4035 FERNANDINA BEACH	Toyo Tires	1260 S 8TH ST	FERNANDINA BEACH	Nassau	32034	(904) 261-3684		N/A
MAVIS - 4036 FT MYERS	Toyo Tires	14650 S TAMIAMI TRAIL	FT MYERS	Lee	33912	(239) 481-9900		N/A
MAVIS - 4037 FT MYERS	Toyo Tires	10520-10580 COLONIAL BLVD	FT MYERS	Lee	33913	(239) 688-3351		N/A
MAVIS - 4038 FT WALTON BEACH	Toyo Tires	799 BEAL PARKWAY	FT WALTON BEACH	Okalossa	32547	(850) 904-0335		N/A
MAVIS - 4039 GAINESVILLE	Toyo Tires	3950 NEWBERRY RD	GAINESVILLE	Alachua	32607	(352) 371-1771		N/A
MAVIS - 4040 GOLDEN GATE	Toyo Tires	4757 GOLDEN GATE PKWY	GOLDEN GATE	Collier	34116	(239) 455-1075		N/A
MAVIS - 4041 GREENACRES	Toyo Tires	5901 LAKE WORTH RD	GREENACRES	Palm Beach	33463	(561) 964-8118		N/A
MAVIS - 4042 GULF BREEZE	Toyo Tires	3730 GULF BREEZE PKWY	GULF BREEZE	Santa Rosa	32563	(850) 677-0373		N/A
MAVIS - 4043 HALLANDALE	Toyo Tires	100 NW HALLANDALE BEACH B	HALLANDALE	Broward	33009	(954) 458-2337		N/A
MAVIS - 4044 HIALEAH	Toyo Tires	5710 NW 176TH ST	HIALEAH	Miami-Dade	33015	(305) 820-1695		N/A
MAVIS - 4045 HOLIDAY	Toyo Tires	1633 US HIGHWAY 19	HOLIDAY	Pasco	34691	(727) 937-4101		N/A
MAVIS - 4046 HOLLYWOOD	Toyo Tires	7200 TAFT ST	HOLLYWOOD	Broward	33024	(954) 981-7004		N/A
MAVIS - 4047 HOLLYWOOD	Toyo Tires	2600 PINE ISLAND RD	HOLLYWOOD	Broward	33024	(954) 517-0066		N/A
MAVIS - 4048 HOLLYWOOD	Toyo Tires	4200 DAVIE ROAD EXTENSION	HOLLYWOOD	Broward	33024	(754) 799-4565		N/A
MAVIS - 4049 HOLLYWOOD	Toyo Tires	2401 STIRLING RD	HOLLYWOOD	Broward	33312	(954) 964-9051		N/A
MAVIS - 4050 HUDSON	Toyo Tires	9615 STATE ROAD 52	HUDSON	Pasco	34669	(727) 869-8100		N/A

MAVIS - 4051 INDIAN HARBOUR BE	Toyo Tires	1050 WALLACE AVE	INDIAN HARBOUR BEAC	Brevard	32937	(321) 773-9223		N/A
MAVIS - 4052 INVERNESS	Toyo Tires	3115 E GULF-TO-LAKE HWY	INVERNESS	Citrus	34453	(352) 860-1020		N/A
MAVIS - 4053 JACKSONVILLE	Toyo Tires	591 PARK ST	JACKSONVILLE	Duval	32202	(904) 355-9595		N/A
MAVIS - 4054 JACKSONVILLE	Toyo Tires	5887 NORMANDY BLVD	JACKSONVILLE	Duval	32205	(904) 786-4650		N/A
MAVIS - 4055 JACKSONVILLE	Toyo Tires	4195 SOUTHSIDE BLVD	JACKSONVILLE	Duval	32216	(904) 645-7007		N/A
MAVIS - 4056 JACKSONVILLE	Toyo Tires	544 SKYMARKS DR	JACKSONVILLE	Duval	32218	(904) 696-9303		N/A
MAVIS - 4057 JACKSONVILLE	Toyo Tires	9628 ARGYLE FOREST BOULEVA	JACKSONVILLE	Duval	32222	(904) 276-2222		N/A
MAVIS - 4058 JACKSONVILLE	Toyo Tires	11630 SAN JOSE BLVD	JACKSONVILLE	Duval	32223	(904) 268-5004		N/A
MAVIS - 4059 JACKSONVILLE	Toyo Tires	13786 BEACH BLVD	JACKSONVILLE	Duval	32224	(904) 223-1412		N/A
MAVIS - 4060 JACKSONVILLE	Toyo Tires	10417 ATLANTIC BLVD	JACKSONVILLE	Duval	32225	(904) 645-3600		N/A
MAVIS - 4061 JACKSONVILLE	Toyo Tires	10755 PHILLIPS HWY	JACKSONVILLE	Duval	32256	(904) 262-8848		N/A
MAVIS - 4062 JACKSONVILLE	Toyo Tires	10211 SAN JOSE BLVD	JACKSONVILLE	Duval	32257	(904) 268-2020		N/A
MAVIS - 4063 JACKSONVILLE BEAC	Toyo Tires	923 S 3RD ST	JACKSONVILLE BEACH	Duval	32250	(904) 247-5577		N/A
MAVIS - 4064 JUNO BEACH	Toyo Tires	13841 US HWY 1	JUNO BEACH	Palm Beach	33408	(561) 624-2211		N/A
MAVIS - 4065 JUPITER	Toyo Tires	50 BUSH RD	JUPITER	Palm Beach	33458	(561) 746-4844		N/A
MAVIS - 4066 JUPITER	Toyo Tires	26 OLD DIXIE HWY	JUPITER	Palm Beach	33458	(561) 746-0800		N/A
MAVIS - 4067 KENDALL	Toyo Tires	6500 SW 117TH AVE	KENDALL	Miami-Dade	33183	(305) 666-4717		N/A
MAVIS - 4068 KISSIMMEE	Toyo Tires	325 W VINE ST	KISSIMMEE	Osceola	34741	(407) 847-7900		N/A
MAVIS - 4069 KISSIMMEE	Toyo Tires	825 TOWNE CENTER DR	KISSIMMEE	Osceola	34759	(407) 935-1828		N/A
MAVIS - 4070 LADY LAKE	Toyo Tires	440 US HIGHWAY 441	LADY LAKE	Lake	32159	(352) 259-8116		N/A
MAVIS - 4071 LAKE CITY	Toyo Tires	2829 W US HIGHWAY 90	LAKE CITY	Columbia	32055	(386) 754-8770		N/A
MAVIS - 4072 LAKE PARK	Toyo Tires	3615 NORTHLAKE BLVD	LAKE PARK	Palm Beach	33403	(561) 842-4289		N/A
MAVIS - 4073 LAKE WALES	Toyo Tires	4561 MACEY LN (HWY 27)	LAKE WALES	Polk	33859	(863) 676-4410		N/A
MAVIS - 4074 LAKELAND	Toyo Tires	4910 N US HIGHWAY 98	LAKELAND	Polk	33809	(863) 859-2200		N/A
MAVIS - 4075 LAKELAND	Toyo Tires	5121 S FLORIDA AVE	LAKELAND	Polk	33813	(863) 647-2124		N/A
MAVIS - 4076 LANTANA	Toyo Tires	1201 HYPOLUXO RD	LANTANA	Palm Beach	33462	(561) 585-6500		N/A
MAVIS - 4077 LARGO	Toyo Tires	10595 ULMERTON ROAD	LARGO	Pinellas	33771	(727) 535-1420		N/A
MAVIS - 4078 LAUDERHILL	Toyo Tires	2601 N STATE ROAD 7	LAUDERHILL	Broward	33313	(954) 484-2224		N/A
MAVIS - 4079 LEHIGH ACRES	Toyo Tires	2911 5TH ST W	LEHIGH ACRES	Lee	33971	(239) 369-5590		N/A
MAVIS - 4080 LONGWOOD	Toyo Tires	805 W STATE ROAD 434	LONGWOOD	Seminole	32750	(407) 830-5040		N/A
MAVIS - 4081 LONGWOOD	Toyo Tires	2600 W. 434 SR	LONGWOOD	Seminole	32750	(407) 794-5929		N/A
MAVIS - 4082 LUTZ	Toyo Tires	2127 BRINSON ROAD	LUTZ	Hillsborough	33558	(813) 949-6720		N/A
MAVIS - 4083 LYNN HAVEN	Toyo Tires	2112 HIGHWAY 77	LYNN HAVEN	BAY COUNTY	32444	(850) 303-7339		N/A
MAVIS - 4084 MARATHON	Toyo Tires	12300 OVERSEAS HWY	MARATHON	Monroe	33050	(305) 289-9992		N/A
MAVIS - 4085 MELBOURNE	Toyo Tires	1580 N WICKHAM RD	MELBOURNE	Brevard	32935	(321) 253-0228		N/A
MAVIS - 4086 MELBOURNE	Toyo Tires	6200 N WICKHAM RD	MELBOURNE	Brevard	32940	(321) 752-6677		N/A
MAVIS - 4087 MELBOURNE	Toyo Tires	7201 LAKE ANDREW DR	MELBOURNE	Brevard	32940	(321) 433-0976		N/A
MAVIS - 4088 MERRITT ISLAND	Toyo Tires	930 N COURTENAY PKWY	MERRITT ISLAND	Brevard	32953	(321) 454-3044		N/A
MAVIS - 4089 MIAMI	Toyo Tires	2821 SW 8TH ST	MIAMI	Miam Dade	33135	(305) 649-7880		N/A
MAVIS - 4090 MIAMI	Toyo Tires	3753 BIRD RD	MIAMI	Miam Dade	33146	(305) 445-1801		N/A
MAVIS - 4091 MIAMI	Toyo Tires	8495 SW 132ND ST	MIAMI	Miam Dade	33156	(305) 233-7788		N/A
MAVIS - 4092 MIAMI	Toyo Tires	8790 SW 24TH ST	MIAMI	Miam Dade	33165	(305) 227-4110		N/A
MAVIS - 4093 MIAMI	Toyo Tires	12450 SW 8TH ST	MIAMI	Miam Dade	33184	(305) 226-5353		N/A
MAVIS - 4094 MIAMI	Toyo Tires	13515 SW 137TH AVE	MIAMI	Miam Dade	33186	(305) 256-1991		N/A
MAVIS - 4095 MIAMI	Toyo Tires	13870-72 SW 88TH STREET	MIAMI	Miam Dade	33186	(786) 260-0450		N/A
MAVIS - 4096 MIAMI	Toyo Tires	11199 SW 211TH STREET	MIAMI	Miam Dade	33189	(305) 259-2925		N/A
MAVIS - 4097 MIAMI GARDENS	Toyo Tires	19850 NW 27TH AVE	MIAMI GARDENS	Miami Dade	33056	(305) 624-6877		N/A

MAVIS - 4098 MIDDLEBURG	Toyo Tires	2705 BLANDING BLVD	MIDDLEBURG	Clay	32068	(904) 291-6655		N/A
MAVIS - 4099 N FT MYERS	Toyo Tires	276 PONDELLA RD	N FT MYERS	Lee	33903	(239) 997-4300		N/A
MAVIS - 4100 N MIAMI	Toyo Tires	1700 N MIAMI BEACH BLVD	N MIAMI	Miam Dade	33162	(305) 654-1323		N/A
MAVIS - 4101 NAPLES	Toyo Tires	4772 TAMIAMI TRAIL N	NAPLES	Collier	34103	(239) 263-8565		N/A
MAVIS - 4102 NAPLES	Toyo Tires	12442 TAMIAMI TRAIL E	NAPLES	Collier	34113	(239) 298-8108		N/A
MAVIS - 4103 NARANJA	Toyo Tires	26994 S DIXIE HWY	NARANJA	Miami Dade	33032	(305) 246-9566		N/A
MAVIS - 4104 NEPTUNE BEACH	Toyo Tires	1353 ATLANTIC BLVD	NEPTUNE BEACH	Duval	32266	(904) 242-4003		N/A
MAVIS - 4105 NEW SMYRNA BEACH	Toyo Tires	1698 STATE ROAD 44	NEW SMYRNA BEACH	Volusia	32168	(386) 423-2451		N/A
MAVIS - 4106 NOKOMIS	Toyo Tires	1240 N TAMIAMI TRAIL	NOKOMIS	Sarasota	34275	(941) 837-5078		N/A
MAVIS - 4107 NORTH PORT	Toyo Tires	4400 AIDAN LANE	NORTH PORT	Sarasota	34287	(941) 300-4141		N/A
MAVIS - 4108 OAKLAND PARK	Toyo Tires	610 E COMMERCIAL BLVD	OAKLAND PARK	Broward	33334	(954) 938-8205		N/A
MAVIS - 4109 OCALA	Toyo Tires	2511 NE SILVER SPRINGS BLVD	OCALA	Marion	34470	(352) 368-7744		N/A
MAVIS - 4110 OCALA	Toyo Tires	2357 SW COLLEGE RD	OCALA	Marion	34471	(352) 237-7900		N/A
MAVIS - 4111 OCALA	Toyo Tires	5534 SW COLLEGE ROAD (SR 20	OCALA	Marion	34474	(352) 644-9281		N/A
MAVIS - 4112 ODESSA	Toyo Tires	13600 STATE ROAD 54	ODESSA	Pasco	33556	(813) 343-5135		N/A
MAVIS - 4113 ORANGE CITY	Toyo Tires	896 SAXON BLVD	ORANGE CITY	Volusia	32763	(386) 774-7400		N/A
MAVIS - 4114 ORANGE PARK	Toyo Tires	1003 BLANDING BLVD	ORANGE PARK	Clay	32065	(904) 272-4444		N/A
MAVIS - 4115 ORANGE PARK	Toyo Tires	375 BLANDING BLVD	ORANGE PARK	Clay	32073	(904) 272-2977		N/A
MAVIS - 4116 ORLANDO	Toyo Tires	2100 S ORANGE AVE	ORLANDO	Orange	32806	(407) 423-9835		N/A
MAVIS - 4117 ORLANDO	Toyo Tires	7601 MAJORCA PL	ORLANDO	Orange	32819	(407) 354-2379		N/A
MAVIS - 4118 ORLANDO	Toyo Tires	12051 S ORANGE BLOSSOM TR/	ORLANDO	Orange	32821	(407) 240-9229		N/A
MAVIS - 4119 ORLANDO	Toyo Tires	3722 S SEMORAN BLVD	ORLANDO	Orange	32822	(407) 282-7434		N/A
MAVIS - 4120 ORLANDO	Toyo Tires	7160 NARCOOSSEE RD	ORLANDO	Orange	32822	(407) 273-1055		N/A
MAVIS - 4121 ORLANDO	Toyo Tires	1651 N ALAFAYA TRAIL	ORLANDO	Orange	32828	(407) 823-9275		N/A
MAVIS - 4122 ORMOND BEACH	Toyo Tires	20 N YONGE ST	ORMOND BEACH	Volusia	32174	(386) 672-8013		N/A
MAVIS - 4123 ORMOND BEACH	Toyo Tires	250 WILLIAMSON BLVD	ORMOND BEACH	Volusia	32174	(386) 615-7237		N/A
MAVIS - 4124 OVIEDO	Toyo Tires	1485 E MITCHELL HAMMOCK R	OVIEDO	Seminole	32765	(407) 977-8889		N/A
MAVIS - 4125 OXFORD	Toyo Tires	11824 N US HIGHWAY 301	OXFORD	Sumter	34484	(352) 626-8154		N/A
MAVIS - 4126 PALATKA	Toyo Tires	813 REID ST	PALATKA	Putnam	32177	(386) 328-9696		N/A
MAVIS - 4127 PALM BAY	Toyo Tires	2005 PALM BAY RD	PALM BAY	Brevard	32905	(321) 723-9002		N/A
MAVIS - 4128 PALM BAY	Toyo Tires	1110 MALABAR RD	PALM BAY	Brevard	32907	(321) 725-0202		N/A
MAVIS - 4129 PALM COAST	Toyo Tires	1050 PALM COAST PARKWAY N	PALM COAST	Flagler	32137	(386) 445-8833		N/A
MAVIS - 4130 PALM HARBOR	Toyo Tires	32581 US HIGHWAY 19 N	PALM HARBOR	Pinellas	34684	(727) 786-4296		N/A
MAVIS - 4131 PALMETTO	Toyo Tires	1429 US HWY #301 N	PALMETTO	Manatee	34221	(941) 729-3802		N/A
MAVIS - 4132 PANAMA CITY	Toyo Tires	1918 WEST 23RD STREET	PANAMA CITY	BAY COUNTY	32405	(850) 387-0901		N/A
MAVIS - 4133 PEMBROKE PINES	Toyo Tires	9898 PINES BLVD	PEMBROKE PINES	Broward	33024	(954) 431-2300		N/A
MAVIS - 4134 PEMBROKE PINES	Toyo Tires	17203 PINES BLVD	PEMBROKE PINES	Broward	33029	(954) 450-0998		N/A
MAVIS - 4135 PENSACOLA	Toyo Tires	407 BRENT LANE	PENSACOLA	ESCAMBIA COUNTY	32503	(850) 786-2738		N/A
MAVIS - 4136 PENSACOLA	Toyo Tires	2023 W NINE MILE ROAD	PENSACOLA	ESCAMBIA COUNTY	32534	(850) 941-7120		N/A
MAVIS - 4137 PINELLAS PARK	Toyo Tires	6201 PARK BLVD	PINELLAS PARK	Pinellas	33781	(727) 549-8050		N/A
MAVIS - 4138 PLANT CITY	Toyo Tires	2303 JIM REDMAN PKWY, STE E	PLANT CITY	Hillsborough	33566	(813) 754-1525		N/A
MAVIS - 4139 POMPANO BEACH	Toyo Tires	2301 N FEDERAL HIGHWAY	POMPANO BEACH	Broward	33062	(954) 782-0991		N/A
MAVIS - 4140 POMPANO BEACH	Toyo Tires	2525 SAMPLE RD	POMPANO BEACH	Broward	33073	(954) 968-1685		N/A
MAVIS - 4141 PONTE VEDRA	Toyo Tires	880 N A1A, STE 17C	PONTE VEDRA	St Johns	32082	(904) 543-9161		N/A
MAVIS - 4142 PORT CHARLOTTE	Toyo Tires	3555 TAMIAMI TRAIL S	PORT CHARLOTTE	Charlotte	33952	(941) 625-4484		N/A
MAVIS - 4143 PORT CHARLOTTE	Toyo Tires	1182 TAMIAMI TRAIL	PORT CHARLOTTE	Charlotte	33953	(941) 743-4949		N/A

MAVIS - 4144 PORT CHARLOTTE	Toyo Tires	24491 SANDHILL BLVD	PORT CHARLOTTE	Charlotte	33983	(941) 467-1318		N/A
MAVIS - 4145 PORT ORANGE	Toyo Tires	899 DUNLAWTON AVE	PORT ORANGE	Volusia	32127	(386) 756-4189		N/A
MAVIS - 4146 PORT ST LUCIE	Toyo Tires	2001 SE PORT ST LUCIE BLVD	PORT ST LUCIE	St Lucie	34952	(772) 337-4033		N/A
MAVIS - 4147 PORT ST LUCIE	Toyo Tires	2634 SW EDGARCE STREET	PORT ST LUCIE	St Lucie	34953	(772) 345-2860		N/A
MAVIS - 4148 PORT ST LUCIE	Toyo Tires	1380 SW ST LUCIE W BLVD	PORT ST LUCIE	St Lucie	34986	(772) 879-1114		N/A
MAVIS - 4149 PUNTA GORDA	Toyo Tires	2500 TAMIAMI TRAIL	PUNTA GORDA	Charlotte	33950	(941) 505-8850		N/A
MAVIS - 4150 RIVERVIEW	Toyo Tires	10418 GIBSONTON DRIVE	RIVERVIEW	Hillsborough	33578	(813) 868-4235		N/A
MAVIS - 4151 ROYAL PALM BEACH	Toyo Tires	450 STATE ROAD 7	ROYAL PALM BEACH	Palm Beach	33411	(561) 791-1117		N/A
MAVIS - 4152 ROYAL PALM BEACH	Toyo Tires	1316 ROYAL PALM BEACH BLVD	ROYAL PALM BEACH	Palm Beach	33411	(561) 798-6422		N/A
MAVIS - 4153 SAINT AUGUSTINE	Toyo Tires	2494 US HIGHWAY 1 S	SAINT AUGUSTINE	St Johns	32086	(904) 797-2105		N/A
MAVIS - 4154 SANFORD	Toyo Tires	4401 W 1ST ST	SANFORD	Seminole	32771	(407) 321-2212		N/A
MAVIS - 4155 SARASOTA	Toyo Tires	3942 S TAMIAMI TRAIL	SARASOTA	Sarasota	34231	(941) 927-1411		N/A
MAVIS - 4156 SARASOTA	Toyo Tires	5947 BROOKHILL BLVD	SARASOTA	Sarasota	34232	(941) 371-1181		N/A
MAVIS - 4157 SARASOTA	Toyo Tires	501 N BENEVA ROAD, STE 700	SARASOTA	Sarasota	34232	(941) 217-1248		N/A
MAVIS - 4158 SARASOTA	Toyo Tires	4626 CLARK RD	SARASOTA	Sarasota	34233	(941) 929-7450		N/A
MAVIS - 4159 SARASOTA	Toyo Tires	2615 UNIVERSITY PARKWAY	SARASOTA	Sarasota	34234	(941) 365-7098		N/A
MAVIS - 4160 SEBASTIAN	Toyo Tires	1677 US HIGHWAY 1	SEBASTIAN	Indian River	32958	(772) 589-1911		N/A
MAVIS - 4161 SEBRING	Toyo Tires	340 US 27	SEBRING	Highlands	33870	(863) 471-3661		N/A
MAVIS - 4162 SEFFNER	Toyo Tires	1808 S PARSONS AVE UNIT 112	SEFFNER	Hillsborough	33584	(813) 655-7737		N/A
MAVIS - 4163 SEMINOLE	Toyo Tires	8650 SEMINOLE BLVD	SEMINOLE	Pinellas	33772	(727) 391-9983		N/A
MAVIS - 4164 SOUTH MIAMI	Toyo Tires	5814 S DIXIE HWY	SOUTH MIAMI	Miami Dade	33143	(305) 666-8921		N/A
MAVIS - 4165 ST CLOUD	Toyo Tires	3551 13TH ST	ST CLOUD	Osceola	34769	(407) 892-2325		N/A
MAVIS - 4166 ST PETERSBURG	Toyo Tires	5344 16TH STREET N	ST PETERSBURG	Pinellas	33703	(727) 521-3502		N/A
MAVIS - 4167 ST PETERSBURG	Toyo Tires	2911 TYRONE BLVD	ST PETERSBURG	Pinellas	33710	(727) 345-2404		N/A
MAVIS - 4168 ST PETERSBURG	Toyo Tires	3398 N 34TH ST	ST PETERSBURG	Pinellas	33713	(727) 527-9555		N/A
MAVIS - 4169 STUART	Toyo Tires	1541 SE FEDERAL HWY	STUART	Martin	34994	(772) 283-8831		N/A
MAVIS - 4170 STUART	Toyo Tires	5200 SE FEDERAL HIGHWAY	STUART	Martin	34997	(772) 283-3997		N/A
MAVIS - 4171 SUNRISE	Toyo Tires	2550 SAWGRASS MILLS CIR	SUNRISE	Broward	33323	(954) 845-9800		N/A
MAVIS - 4172 TALLAHASSEE	Toyo Tires	800 OCALA RD	TALLAHASSEE	Leon	32304	(850) 576-3570		N/A
MAVIS - 4173 TALLAHASSEE	Toyo Tires	2220 CAPITAL CIR NE	TALLAHASSEE	Leon	32308	(850) 297-0121		N/A
MAVIS - 4174 TALLAHASSEE	Toyo Tires	3475 APALACHEE PKWY	TALLAHASSEE	Leon	32311	(850) 402-2989		N/A
MAVIS - 4175 TAMARAC	Toyo Tires	6440 W COMMERCIAL BLVD	TAMARAC	Broward	33319	(954)749-1222		N/A
MAVIS - 4176 TAMPA	Toyo Tires	3733 HENDERSON BLVD	TAMPA	Hillsborough	33609	(813) 879-6715		N/A
MAVIS - 4177 TAMPA	Toyo Tires	15113 N NEBRASKA AVE	TAMPA	Hillsborough	33613	(813) 397-2572		N/A
MAVIS - 4178 TAMPA	Toyo Tires	7602 W HILLSBOROUGH AVE	TAMPA	Hillsborough	33615	(813) 885-1781		N/A
MAVIS - 4179 TAMPA	Toyo Tires	5107 E FOWLER AVE	TAMPA	Hillsborough	33617	(813) 985-0905		N/A
MAVIS - 4180 TAMPA	Toyo Tires	1014 US HIGHWAY 301 S	TAMPA	Hillsborough	33619	(813) 628-0800		N/A
MAVIS - 4181 TAMPA	Toyo Tires	6602 GUNN HWY	TAMPA	Hillsborough	33625	(813) 265-1635		N/A
MAVIS - 4182 TARPON SPRINGS	Toyo Tires	1260 E LAKE RD S	TARPON SPRINGS	Pinellas	34688	(727) 939-2221		N/A
MAVIS - 4183 TITUSVILLE	Toyo Tires	3550 S WASHINGTON AVE	TITUSVILLE	Brevard	32780	(321) 268-5772		N/A
MAVIS - 4184 TITUSVILLE	Toyo Tires	2965 COLUMBIA BLVD	TITUSVILLE	Brevard	32780	(321) 264-8616		N/A
MAVIS - 4185 VENICE	Toyo Tires	2361 EAST VENICE AVE	VENICE	Sarasota	34292	(941) 837-5077		N/A
MAVIS - 4186 VENICE	Toyo Tires	2348 S. TAMIAMI TRAIL	VENICE	Sarasota	34293	(941) 493-3317		N/A
MAVIS - 4187 VERO BEACH	Toyo Tires	1159 21ST ST	VERO BEACH	Indian River	32960	(772) 569-6770		N/A
MAVIS - 4188 VERO BEACH	Toyo Tires	5115 20TH STREET	VERO BEACH	Indian River	32966	(772) 469-2655		N/A
MAVIS - 4189 WESLEY CHAPEL	Toyo Tires	27629 WESLEY CHAPEL BLVD	WESLEY CHAPEL	Pasco	33543	(813) 907-5640		N/A
MAVIS - 4190 WESLEY CHAPEL	Toyo Tires	1005 BRUCE B DOWNS BLVD	WESLEY CHAPEL	Pasco	33543	(813) 929-7700		N/A

MAVIS - 4191 WEST BOCA RATON	Toyo Tires	23193 SANDLEFOOT PLAZA DR	WEST BOCA RATON	Palm Beach	33428	(561) 451-0765		N/A
MAVIS - 4192 WEST MELBOURNE	Toyo Tires	1416 W NEW HAVEN AVE	WEST MELBOURNE	Brevard	32904	(321) 728-5566		N/A
MAVIS - 4193 WEST PALM BEACH	Toyo Tires	1544 PALM BEACH LAKES BLVD	WEST PALM BEACH	Palm Beach	33401	(561) 640-7300		N/A
MAVIS - 4194 WEST PALM BEACH	Toyo Tires	2770 NORTH MILITARY TRAIL	WEST PALM BEACH	Palm Beach	33409	(561) 471-5207		N/A
MAVIS - 4195 WEST PALM BEACH	Toyo Tires	1760 N JOG RD, SUITE 100	WEST PALM BEACH	Palm Beach	33411	(561) 697-5043		N/A
MAVIS - 4196 WEST PALM BEACH	Toyo Tires	1840 S MILITARY TRAIL	WEST PALM BEACH	Palm Beach	33415	(561) 642-9032		N/A
MAVIS - 4197 WINTER HAVEN	Toyo Tires	875 6TH STREET NW	WINTER HAVEN	Polk	33881	(863) 299-6443		N/A
MAVIS - 4198 WINTER PARK	Toyo Tires	2701 LEE ROAD	WINTER PARK	Orange	32789	(407) 457-3536		N/A
MAVIS - 4199 WINTER PARK	Toyo Tires	2216 ALOMA AVE	WINTER PARK	Orange	32792	(407) 629-5656		N/A
MAVIS - 4200 WINTER SPRINGS	Toyo Tires	1481 TUSKAWILLA RD	WINTER SPRINGS	Seminole	32708	(407) 695-3040		N/A
MAVIS - 4201 YULEE	Toyo Tires	463118 STATE ROAD 200	YULEE	Nassau	32097	(904) 225-5107		N/A
MAVIS - 4202 ZEPHYRHILLS	Toyo Tires	7540 GALL BLVD	ZEPHYRHILLS	Pasco	33452	(813) 779-3909		N/A
MAVIS - 508 WIMAUMA	Toyo Tires	4961 STATE ROAD 674	WIMAUMA	Hillsborough	33598	(813)736-0265		N/A
MAVIS - 531 HUDSON	Toyo Tires	12229 LITTLE RD	HUDSON	Pasco	34667	727-819-4669		N/A
MAVIS - 536 BRADENTON	Toyo Tires	5706 FL-64E	BRADENTON	Manatee	34208	941-877-2093		N/A
Mavis - 573 Seffner	Toyo Tires	321 W Dr Martin Luther King Jr	Seffner	Hillsborough	33584	813-681-5152		N/A
Mavis - 574 Dale Mabry	Toyo Tires	4526 South Dale Mabry Hwy	Tampa	Hillsborough	33611	813-839-3100		N/A
Mavis - 575 Brue B Downs	Toyo Tires	6403 Tampa County Line	Tampa	Hillsborough	33647	813-591-2591		N/A
Mavis - 576 Valrico	Toyo Tires	3231 Lithia Pinecrest Rd	Valrico	Hillsborough	33596	813-643-7200		N/A
MAVIS - 723 TAMPA	Toyo Tires	6422 HARNEY RD	TAMPA	Hillsborough	33610	813-553-6225		N/A
MAVIS - 741 LECANTO	Toyo Tires	1978 N LECANTO HWY	LECANTO	Citrus	34461	352-474-5559		N/A
MAVIS - 745 BOCA RATON	Toyo Tires	10 NW 28th Street	Boca Raton	Palm Beach	33431	(561) 295-1560		N/A
MAVIS - 746 DEERFIELD BEACH	Toyo Tires	377 S. Federal Highway	Deerfield Beach	Broward	33441	(757) 296-7987		N/A
MAVIS - 747 FORT LAUDERDALE	Toyo Tires	3500 N. Federal Highway	Fort Lauderdale	Broward	33308	(757) 296-8519		N/A
Mavis - 748 Plantation	Toyo Tires	1401 South University Dr.	Plantation	Broward	33324	(757) 296-8721		N/A
MAVIS - 749 SUNRISE	Toyo Tires	1751 NW 136th Avenue	Sunrise	Broward	33323	(757) 298-7552		N/A
MAVIS - 791 TRINITY LAKES	Toyo Tires	11964 FL-54	ODESSA	Pasco	33556	813-580-8779		N/A
MAVIS - 799 OLDSMAR	Toyo Tires	650 DOUGLAS ROAD EAST	OLDSMAR	Pinellas	34677	813-855-8473		N/A
MAVIS - 800 PALM HARBOR	Toyo Tires	601 US ALT. 19 NORTH	PALM HARBOR	Pinellas	34683	727-781-8473		N/A
MAVIS - 801 CLEARWATER	Toyo Tires	1798 NORTH HERCULES	CLEARWATER	Pinellas	33765	727-446-8107		N/A
MAVIS - 802 DUNEDIN	Toyo Tires	1810 MAIN STREET	DUNEDIN	Pinellas	34698	727-733-0884		N/A
MAVIS - 806 LITTLE ROAD	Toyo Tires	5444 Little Road	New Port Richey	Pasco	34655	727-300-4257		N/A
MAVIS - 817 TALLAHASSEE	Toyo Tires	205 NORTH MAGNOLIA DRIVE	TALLAHASSEE	Leon	32301	850-325-0971		N/A
SOUTHERN TIRE MART, LLC	Toyo Tires	4500 Home Run Blvd Ste 300	Davenport	Polk	33837	689-208-3967	alex.budd@stmtires.com	N/A
SOUTHERN TIRE MART, LLC	Toyo Tires	285 SAND MINE ROAD	DEFUNIAK SPRINGS	Walton	32433	850-951-2180		N/A
SOUTHERN TIRE MART, LLC	Toyo Tires	309 GREEN ACRES ROAD	FORT WALTON BEACH	Okaloosa Count	32547	850-226-7233	850-226-4298	N/A
SOUTHERN TIRE MART, LLC	Toyo Tires	1505 COMMERCE BLVD	MIDWAY	GADSDEN COUNTY	32343-6625	(850) 580-4010	shane.barnes@stmtires.com	N/A
SOUTHERN TIRE MART, LLC	Toyo Tires	7528 PENNY RD	PANAMA CITY	BAY COUNTY	32404-5506	(850) 914-0092	ttolbert@stmtires.com	N/A
SOUTHERN TIRE MART, LLC	Toyo Tires	7800 PITTMAN AVE	PENSACOLA	ESCAMBIA COUNTY	32534-4495	(850) 477-3330	jackie.steadham@stmtires.com	N/A
SOUTHERN TIRE MART, LLC	Toyo Tires	5343 S.E. 131 ST.	STARKE	Bradford	32091	(800)874-4270	(904)964-4373	N/A
St Lucie Battery and Tire	Toyo Tires	5500 Orange Ave	Ft Pierce	St Lucie	34947	772.461.1746	jcoogan@slbt.com	N/A
St Lucie Battery and Tire	Toyo Tires	16087 SW WARFIELD BLVD	Indiantown	Martin	34956	7725973741	jcoogan@slbt.com	N/A
St Lucie Battery and Tire	Toyo Tires	198 US 98	Okeechobee	Okeechobee	34972	863.357.2431	jcoogan@slbt.com	N/A
St Lucie Battery and Tire	Toyo Tires	3992 SE Bruner Terrace	Palm City	Martin	34990	772.219.0100	jcoogan@slbt.com	N/A

St Lucie Battery and Tire	Toyo Tires	6911 Hancock Dr	Port St Lucie	St Lucie	34592	772.466.1814	jcoogan@slbt.com	N/A
St Lucie Battery and Tire	Toyo Tires	7897 SW JACK JAMES DR	Stuart	Martin	34997	772-212-4847	jcoogan@slbt.com	N/A
St Lucie Battery and Tire	Toyo Tires	1893 90th Ave	Vero Beach	Indian River	32966	772.569.7629	jcoogan@slbt.com	N/A
St Lucie Battery and Tire	Toyo Tires	7071 N Military Trail	West Palm Beach	Palm Beach	33410	561.844.5505	jcoogan@slbt.com	N/A
Tinseltown Mavis	Toyo Tires	9718 Touchton Road	Jacksonville	Duval	32246	904-719-6116		N/A
WELDON TIRE - MAVIS - Sun Whol	Toyo Tires	6807 Stuart Ln. S	Jacksonville	Duval	32254	904-693-4476		N/A

FSA TIRE CONTRACT: FSA25-TRS27.0
TIRE MANUFACTURER AUTHORIZED SALES AND SERVICE CENTERS
MANUFACTURER NAME: _____Yokohama Tire
MANUFACTURER FEIN #: ____95-2624417

Manufacturer Authorized Sales & Service Center Name	Tire Brands	Street Address	City	County	Zip Code	Telephone #	E-Mail To Accept Purchase Orders	MWBE Status (if available)Y = MWBE
Snider Fleet Solutions	Yokohama	9831 S. Orange Ave.	Orlando	Orange	32824	407-855-9111	timmiller@sniderfleet.com	
Snider Fleet Solutions	Yokohama	2015 Hwy 37 South	Mulberry	Polk	33860	863-425-3053	Same	
Snider Fleet Solutions	Yokohama	811 North 50th Street	Tampa	Hillsboro	33619	813-248-0062	Same	
Snider Fleet Solutions	Yokohama	3400 Burris Road	Davie	Broward	33314	954-585-8525	Same	
Snider Fleet Solutions	Yokohama	5321 Dr. MLK Jr. Blvd	Ft. Myers	Lee	33905	239-334-7100	Same	
Snider Fleet Solutions	Yokohama	230 73rd Terrace N.	West Palm	Palm Beach	33413	561-792-3900	Same	
Snider Fleet Solutions	Yokohama	4320 15th Street East	Bradenton	Manatee	34208	941-753-4705	Same	
Snider Fleet Solutions	Yokohama	740 S. Industry Rd.	Cocoa	Brevard	32926	321-576-9580	Same	
Snider Fleet Solutions	Yokohama	443 SW 54th Court	Ocala	Marion	34474	354-229-8338	Same	
Callaghan Tire	Yokohama	3035 East Main Street	Lakeland	Polk	33801	863-665-9336	dmead@callaghantire.com	
Callaghan Tire	Yokohama	211 SW 33rd Avenue	Ocala	Marion	34474	352-873-9005	Same	
Callaghan Tire	Yokohama	3615 15th Street East	Bradenton	Manatee	34208	941-747-6189	Same	
Callaghan Tire	Yokohama	11940 44th Street N.	Clearwater	Pinellas	33762	727-571-3358	Same	
Callaghan Tire	Yokohama	2203 Alicia Street	Ft. Myers	Lee	33901	239-334-0105	Same	
Callaghan Tire	Yokohama	3600 NW 54th Street	Miami	Dade	33142	305-634-7665	Same	
Callaghan Tire	Yokohama	5791 Taylor Rd.	Naples	Lee	34109	239-592-0003	Same	
Callaghan Tire	Yokohama	891 West 13th Street	Palm Beach	Palm Beach	33404	561-845-2875	Same	
Callaghan Tire	Yokohama	6425 Causeway Blvd.	Tampa	Hillsboro	33619	813-630-0039	Same	
Callaghan Tire	Yokohama	4421 12th Street Court E.	Bradenton	Manatee	34203	941-751-1577	Same	
Boulevard Tire Center	Yokohama	3850 NW 30th Avenue	Miami	Dade	33142	305-635-8116	smeents@boulevardtire.com	
Boulevard Tire Center	Yokohama	6815 Adamo Dr.	Tampa	Hillsboro	33619	813-621-5445	Same	
Boulevard Tire Center	Yokohama	8210 S. Orange Avenue	Orlando	Orange	32809	407-240-1072	Same	
Boulevard Tire Centers	Yokohama	625 West Main	Bartow	Orange	32830	863-533-0368	smeents@boulevardtire.com	
Boulevard Tire Centers	Yokohama	2964 63rd Avenue East	Bradenton	Manatee	34203	941-739-7704	Same	
Boulevard Tire Centers	Yokohama	5178 Duncan Road	Punta Gorda	Charlotte	33982	941-639-7788	Same	
Boulevard Tire Centers	Yokohama	7051 Alico Road	Ft. Myers	Lee	33912	239-267-4701	Same	
Boulevard Tire Centers	Yokohama	1609 N. Cocoa Blvd.	Cocoa	Brevard	32922	321-639-3077	Same	
Tire Max of South Florida	Yokohama	2540 West 78th Street	Hialeah	Dade	33016	786-400-8420	kalil6473@yahoo.com	
Express Tire	Yokohama	10080 Intercom Drive	Ft. Myers	Lee	33912	239-561-2810	expresstiredistributor@gmail.com	
Falcon Tire Centers	Yokohama	12940 NW S. River Drive	Medley	Dade	33178	305-863-0034	arios@ftw.tires	
St. Lucie Battery & Tire	Yokohama	5500 Orange Avenue	Fort Pierce	Saint Lucie	34947	772-672-8702	jcoogan@slbt.com	
St. Lucie Battery & Tire	Yokohama	1893 90th Avenue	Vero Beach	Indian River	32966	Same	Same	
St. Lucie Battery & Tire	Yokohama	198 US Hwy 98 N.	Okeechobee	Okeechobee	34972	Same	Same	
St. Lucie Battery & Tire	Yokohama	7071 N. Military Trail	West Palm	Palm Beach	33410	Same	Same	
St. Lucie Battery & Tire	Yokohama	3992 SW Bruner Terrace	Palm City	Martin	34990	Same	Same	
Boulevard Tire Center	Yokohama	5105 Sw 41st Blvd	Gainesville	Aluachu	32608	352-371-6209	shellyer@boulevardtire.com	
Boulevard Tire Center	Yokohama	3680 S Nova Rd	Port Orange	Volusia	32129	407-889-5241		
Boulevard Tire Center	Yokohama	201 N State St	Bunnell	Flagler	32110	386-586-6088		
Boulevard Tire Center	Yokohama	7500 Commonwealth Ave	Jacksonville	Duvall	32220	904-786-8550		
Boulevard Tire Center	Yokohama	4702 Capital Cir Nw	Tallahassee	Leon	32302	850-222-3130		
Boulevard Tire Center	Yokohama	418 S Us Highway 441	Lady Lake	Lake	32159	352-430-2380		
Boulevard Tire Center	Yokohama	800 S Nova Rd	Dayton Beach	Volusia	32114	386-258-8129		
Boulevard Tire Center	Yokohama	828 Edgewood Ave N	Jacksonville	Duvall	32254	904-388-5457		
Southern Tire Mart	Yokohama	1505 Commerce Ave	Midway	Gadsden	32343	850-580-4010		
Snider Tire	Yokohama	2550 W Beaver St	Jacksonville	Duvall	32254	904-389-0255		
Callahan Tire	Yokohama	7075 12th St W	Jacksonville	Duvall	32220	904-693-4999		
Callahan Tire	Yokohama	211 SW 33rd Ave	Ocala	Marion	34474	352-873-9005		

Davis Tire Center	Yokohama	5971 W Beaver St	Jacksonville	Duvall	32254	904-329-4933		
Neece Tire & Auto	Yokohama	4792 Blountstown Hwy	Tallahassee	Leon	32304	850-574-4100		

FSA Cooperative Purchasing Program

FSA25-TRS27.0: Tires
Base Specifications

Bid Item Groups

Tire Price and MSRP must be provided for all specifications bid. Additional information requested on the Item Group Price Sheets should be provided, if applicable. Tires offered under this bid shall be as listed in the following item groups:

- Law Enforcement Pursuit & Emergency High Speed Vehicle Tires
- Passenger Vehicle Tires
- Light Truck & Related Vehicle Tires
- Commercial Truck & Related Vehicle Tires
- Off Road Equipment Tires
- Agricultural Farm & Implement Tires
- Specialty Tires
- Off The Road (OTR) Solid Rubber Molded Tires
- Press On Solid Rubber Tires
- Industrial - Solid Rubber Tires
- Rubber Tracks for Tractors & Equipment
- Re-Tread Tire

Law Enforcement Pursuit & Emergency High Speed Vehicle Tires

This specification is for air tires. All tires offered under this specification must be new, unused, and in current production. Re-tread tires shall not be offered. If optional items and services are purchased, each price shall be added to the invoice as a separate additional charge. All tires, including optional items and services, provided must be designed, constructed, and installed to be fully suitable for the intended use and service.

Prices bid must include:

- Disposal fee, if applicable
- Valve and installation
- Tire Pressure Monitoring System (TPMS) sensor and installation
- Tire Mount
- Tire Balance

Passenger Vehicles Tires

This specification is for air tires. All tires offered under this specification must be new, unused, and in current production. Re-tread tires shall not be offered. If optional items and services are purchased, each price shall be added to the invoice as a separate additional charge. All tires, including optional items and services, provided must be designed, constructed, and installed to be fully suitable for the intended use and service.

Prices bid must include:

- Disposal fee, if applicable
- Valve and installation
- Tire Pressure Monitoring System (TPMS) sensor and installation
- Tire Mount
- Tire Balance

Light Truck & Related Vehicle Tires

This specification is for air tires. All tires offered under this specification must be new, unused, and in current production. Re-tread tires shall not be offered. If optional items and services are purchased, each price shall be added to the invoice as a separate additional charge. All tires, including optional items and services, provided must be designed, constructed, and installed to be fully suitable for the intended use and service.

Prices bid must include:

- Disposal fee, if applicable
- Valve and installation
- Tire Pressure Monitoring System (TPMS) sensor and installation
- Tire Mount
- Tire Balance

Commercial Truck & Related Vehicle Tires

This specification is for air tires. All tires offered under this specification must be new, unused, and in current production. Re-tread tires shall not be offered. If optional items and services are purchased, each price shall be added to the invoice as a separate additional charge. All tires, including optional items and services, provided must be designed, constructed, and installed to be fully suitable for the intended use and service.

Prices bid must include:

- Disposal fee, if applicable
- Valve and installation
- Tire Pressure Monitoring System (TPMS) sensor and installation
- Tire Mount
- Tire Balance

Off Road Equipment Tires

This specification is for air tires. All tires offered under this specification must be new, unused, and in current production. Re-tread tires shall not be offered. If optional items and services are purchased, each price shall be added to the invoice as a separate additional charge. All tires, including optional items and services, provided must be designed, constructed, and installed to be fully suitable for the intended use and service.

Prices bid must include:

- Disposal fee, if applicable
- Valve and installation
- Tire Pressure Monitoring System (TPMS) sensor and installation
- Tire Mount
- Tire Balance

Agricultural Farm & Implement Tires

This specification is for air tires. All tires offered under this specification must be new, unused, and in current production. Re-tread tires shall not be offered. If optional items and services are purchased, each price shall be added to the invoice as a separate additional charge. All tires, including optional items and services, provided must be designed, constructed, and installed to be fully suitable for the intended use and service.

Prices bid must include:

- Disposal fee, if applicable
- Valve and installation
- Tire Mount

Specialty Tires

This specification is for air tires. All tires offered under this specification must be new, unused, and in current production. Re-tread tires shall not be offered. If optional items and services are purchased, each price shall be added to the invoice as a separate additional charge. All tires, including optional items and services, provided must be designed, constructed, and installed to be fully suitable for the intended use and service.

Prices bid must include:

- Disposal fee, if applicable
- Valve and installation
- Tire Pressure Monitoring System (TPMS) sensor and installation
- Tire Mount
- Tire Balance

Off The Road (OTR) Solid Rubber Molded Tires

This specification is for solid rubber tires. All tires offered under this specification must be new, unused, and in current production. Authorized sales and service centers must provide delivery costs, and when applicable installation costs, in writing on the quote to the purchaser prior to placing the order. All tires, including optional items and services, provided must be designed, constructed, and installed to be fully suitable for the intended use and service.

Prices for the following items and services shall be supplied, as applicable, on the Specification and Price Sheet:

- Disposal fee, if applicable
- Wheel exchange credit
- Tire mount installation on purchaser-owned wheel assembly

Press On Solid Rubber Tires

This specification is for solid rubber tires. All tires offered under this specification must be new, unused, and in current production. Authorized sales and service centers must provide delivery costs, and when applicable installation costs, in writing on the quote to the purchaser prior to placing the order. All tires, including optional items and services, provided must be designed, constructed, and installed to be fully suitable for the intended use and service.

Prices for the following items and services shall be supplied, as applicable, on the Specification and Price Sheet:

- Disposal fee, if applicable
- Wheel exchange credit
- Tire mount installation on purchaser-owned wheel assembly

Industrial – Solid Rubber Tires

This specification is for solid rubber tires. All tires offered under this specification must be new, unused, and in current production. Authorized sales and service centers must provide delivery costs, and when applicable installation costs, in writing on the quote to the purchaser prior to placing the order. All tires, including optional items and services, provided must be designed, constructed, and installed to be fully suitable for the intended use and service.

Prices for the following items and services shall be supplied, as applicable, on the Specification and Price Sheet:

- Disposal fee, if applicable
- Wheel exchange credit
- Tire mount installation on purchaser-owned wheel assembly

Rubber Tracks For Tractors & Equipment

This specification is for rubber tracks. All rubber tracks offered under this specification must be new, unused, and in current production. Authorized sales and service centers must provide delivery costs, and when applicable installation costs, in writing on the quote to the purchaser prior to placing the order. All tracks, including optional items and services, provided must be designed, constructed, and installed to be fully suitable for the intended use and service.

Prices for the following items and services shall be supplied, as applicable, on the Specification and Price Sheet:

- Disposal fee, if applicable
- Track mount installation on purchaser-owned wheel assembly

Re-Tread Tires

This specification is for re-tread tires. The waste fee is included in the base price and must be provided in the bid submission. If optional items and services are purchased, each price shall be added to the invoice as a separate additional charge. All tires, including optional items and services, provided must be designed, constructed, and installed to be fully suitable for the intended use and service.

Prices for the following items and services shall be supplied, as applicable, on the Specification and Price Sheet:

- Disposal fee, if applicable
- Valve and installation
- Tire Mount
- Tire Balance

FSA Cooperative Purchasing Program

FSA25-TRS27.0: Tires
Terms and Conditions

Florida Sheriffs Association
Cooperative Purchasing Program
Contract Terms and Conditions

Table of Contents

1.0GENERAL CONDITIONS 4

1.01BID CORRESPONDENCE 4

1.02PURPOSE 4

1.03TERM OF CONTRACT 4

1.04JURISDICTION 4

1.05SHERIFF AS COUNTY CONSTITUTIONAL OFFICER 5

1.06FUNDING 5

1.07CURRENCY 5

1.08GENERAL DEFINITIONS 5

1.09ELIGIBLE PURCHASERS OF CONTRACT 7

1.10LEGAL REQUIREMENTS 8

1.11PATENTS & ROYALTIES 8

1.12FEDERAL AND STATE STANDARDS 8

1.13UNDERWRITERS' LABORATORIES 8

1.14AMERICANS WITH DISABILITIES ACT 8

1.15REASONABLE ACCOMMODATION 9

1.16DISADVANTAGED BUSINESSES 9

1.17ANTI-DISCRIMINATION 9

1.18BEST COMMERCIAL PRACTICES 9

1.19PUBLIC ENTITY CRIMES (PEC) 9

1.20TAX EXEMPTION 10

1.21ORDER OF PRECEDENCE IN THE EVENT OF CONFLICT 10

1.22COMMUNICATIONS 10

1.23CLARIFICATION AND ADDENDA 10

1.24SIGNED BID CONSIDERED AN OFFER 11

1.25ASSIGNMENT OF CONTRACT 11

1.26TERMINATION OF PRODUCT LINE 11

1.27DEMONSTRATION OF COMPETENCY 11

1.28VENDOR ABILITY TO PERFORM 12

1.29FINANCIAL RESPONSIBILITY 12

1.30QUALITY AND SAFETY 13

1.31NONCONFORMANCE 13
1.32GRATUITIES 13
1.33TIE BIDS 13
1.34RIGHT TO AUDIT 13
1.35LICENSES AND PERMITS 14
1.36PERFORMANCE BONDS 15
1.37ELIMINATION FROM CONSIDERATION 15
1.38INDEPENDENT PREPARATION 15
1.39DEFAULT 15
1.40PROTESTS AND ARBITRATION 15
1.41NONPERFORMANCE 16
1.42SEVERABILITY 17
1.43TERMINATION FOR CAUSE 17
1.44TERMINATION WITHOUT CAUSE 18
1.45CONTRACT ADVERTISEMENT AND USE OF FSA LOGO 18
2.0 BIDDER INSTRUCTIONS 19
2.01QUALIFICATION 19
2.02LICENSING/FACILITIES 19
2.03INSURANCE AND INDEMNIFICATION 19
2.04SPECIFICATIONS 21
2.05SEALED BIDS 22
2.06EXCEPTIONS 22
2.07MISTAKES 22
2.08EQUIVALENTS 22
2.09MANDATORY PRE-BID MEETING 22
2.10PRICES QUOTED 23
2.11OPTION PRICING 23
2.12BID SUBMISSIONS 23
2.13EXECUTION OF BID 24
2.14MODIFICATION OR WITHDRAWALS OF BIDS 24
2.15LATE BIDS 24
2.16BID OPENING 24

2.17DETERMINATION OF RESPONSIVENESS 25
2.18RESPONSIBLE BIDDER CRITERIA 25
2.19BASIS FOR AWARD 25
2.20BID TABULATIONS 26
2.21MINOR IRREGULARITIES/RIGHT TO REJECT 26
2.22CONE OF SILENCE 26
3.0 CONTRACT CONDITIONS 27
3.01GENERAL REQUIREMENTS 27
3.02STATEMENT OF AUTHORITY 27
3.03VENDOR CONTACT INFORMATION 27
3.04CONTRACT EXTENSION 27
3.05ADDITIONS AND DELETIONS 27
3.06 PRICE ADJUSTMENT 28
3.07CONDITIONS 28
3.08FACILITIES 29
3.09INSTALLATIONS AND SERVICES 29
3.10NON-SCHEDULED OPTIONS 29
3.11FORCE MAJEURE 29
3.12DELIVERY 29
3.13PURCHASE ORDERS 30
3.14DELIVERY AND SHIPPING 30
3.15INSPECTION AND ACCEPTANCE 30
3.16DISPOSAL AND OTHER FEES 31
3.17INVOICING AND PAYMENTS 31
3.18WARRANTY REPAIRS AND SERVICE 31
3.19QUARTERLY REPORTS 31
3.20ADMINISTRATIVE FEE 32
3.21LIQUIDATED DAMAGES 33
Appendix A: Bid Calendar 34
Appendix B: ACH Payment Form 35
Appendix C: Insurance Checklist 36

1.0 GENERAL CONDITIONS

1.01 BID CORRESPONDENCE

All correspondence regarding this bid should be directed to the Florida Sheriffs Association, "FSA". Please be sure to reference the bid number and title and provide your contact information. Communication for this Invitation to Bid should be identified by contract number and title and directed to:

Florida Sheriffs Association
Attn: Cooperative Purchasing Program Coordinator
2617 Mahan Drive
Tallahassee, FL 32308
E-mail: CPP@flsheriffs.org

1.02 PURPOSE

The FSA invites interested manufacturers and manufacturer's authorized representatives to submit responses in accordance with these solicitation documents. The FSA Cooperative Purchasing Program will conduct the solicitation process and administer the resulting contract. The purpose of this bid is to establish a contract with tire manufacturers and manufacturer's authorized service centers for the purchase of tires and optional goods and services.

Trade-ins are not addressed in this Invitation to Bid or the resulting contract. If a purchaser has wishes to offer tires for trade or recycling to the dealer, the purchaser and dealer may do so at their sole discretion, separate and apart from this contract. Under no circumstances shall trade-in transactions be deemed to constitute part of, or to have been conducted pursuant to, this contract.

1.03 TERM OF CONTRACT

The term for Contract FSA25-TRS27.0: Tires shall remain in effect for two (2) years from date of contract execution by the FSA, and may be extended by mutual agreement, at the sole option and discretion of the FSA. The initial term of these contracts begins April 1, 2025, and ends March 31, 2027.

Contract extensions will only be executed when the FSA determines, based on then-existing conditions, that it is in the best interest of the FSA and the purchasers to do so.

1.04 JURISDICTION

This Agreement shall be governed by and construed in accordance with the laws of the State of Florida. Venue shall lie in the appropriate court in and for Leon County, Florida.

1.05 SHERIFF AS COUNTY CONSTITUTIONAL OFFICER

The Offices of the Sheriff in the State of Florida are constitutional offices of the State of Florida. Each has the authority either individually or collectively to execute contracts for all goods and services for the proper conduct of that office. Section 30.53, Florida Statutes, exempts the sheriff's offices from the provisions of the Florida Statutes that would otherwise require sealed and competitive bidding procedures.

The Office of the Sheriff is not required by law to accept the lowest priced proposal and may reject any or all of the bids without recourse. Bidders are solely responsible for their own bid preparation costs and nothing in this solicitation in any way obligates the participating sheriffs' offices for any payment for any activity or costs incurred by any bidder in responding to this solicitation.

1.06 FUNDING

In the case of certain purchasers, including state agencies, funds expended for the purposes of the contract must be appropriated by the Florida Legislature, the individual participating agency, or the agency's appropriating authority for each fiscal year included within the contract period. For such agencies, their performances and obligations to pay for products or services under any resulting contract, or purchase order, are contingent upon such an annual appropriation by the Legislature, individual agency or by the appropriating authority. Therefore, any contract or purchase order with such an agency shall automatically terminate without penalty or termination costs in the event of non-appropriation.

1.07 CURRENCY

All transaction amounts, bids, quotes, provisions, payments, or any part of this contract relating to currency are to be made in United States Dollar.

1.08 GENERAL DEFINITIONS

The terms used in this contract are defined as the following:

A. Bidder: A business or enterprise that submits a formal bid to the Florida Sheriffs Association Cooperative Purchasing Program in accordance with the Florida Sheriffs Association Cooperative Purchasing Program Terms and Conditions. A bidder, that is not the manufacturer, must be authorized by the manufacturer to market and sell an item for which they are bidding.

B. Bid System: The online forum used for the submission of bids and review of bid results for the specifications connected to this Invitation to Bid. VendorLink is the software used for this bid.

C. Build Sheet: A document from the Bidder that confirms that the item submitted meets or exceeds the FSA Base Specifications. Build sheets include, but are not limited to, the factory options list and door data plate information for vehicles that include details such as engine size and transmission, paint codes, production date, axle code, etc.

D. Dealer: An enterprise authorized by the manufacturer to market, sell, provide, and service the items for the Florida Sheriffs Association Cooperative Purchasing Program. Dealers may be Vendor-owned and controlled, in whole or in part, or independently owned and controlled.

E. End User: A term used to distinguish the person who ultimately uses or is intended to use a product or for whom a product is designed for use.

F. Factory: Refers to the manufacturer produced products.

G. Fleet Advisory Committee (committee): An employee of a sheriff's office or other local governmental agency, or person who FSA CPP identifies as a subject matter expert who assists with the development of bid specifications and evaluation of bid responses. The committee makes recommendations to the FSA CPP and is not responsible for final awards.

H. Florida Sheriffs Association Cooperative Purchasing Program (FSA CPP): The entity that administers the Invitation to Bid and contract administration functions for the resulting contract(s).

I. FSA Base Specifications: Written descriptions of the minimum requirements for each item or item group developed by the FSA CPP for Bidders to bid on. These item requirements may be unique to FSA CPP and require additional components to the manufacturer's standard item.

J. Invitation to Bid: A competitive solicitation and award process established through the issuance of an invitation to Bidders, vendors, dealers and manufacturers to submit a price offer on a specific product to be provided. This term shall include the FSA Base Specifications available to Bidders on the Bid System and references to solicitation documents. The term shall not include requests for proposals, requests for quotes, requests for letters of interest, or the solicitation of purchase orders based on oral or written quotations.

K. Manufacturer: The original producer or provider of items offered on this contract.

L. Manufacturer Authorized Service Center (MASC): A facility authorized by the vendor to market, sell, and provide services as included in the bid award. Manufacturer Authorized Service Centers (MASC) may be independently owned and operated or be operated or otherwise under the control of Vendors. MASC perform on behalf of the vendor certain functions listed in this contract to include, but not limited to, ordering, installation, and warranty service. Where a MASC operated or under the control of a manufacturer performs functions for which a vendor is responsible pursuant to this Contract, the vendor shall be responsible for ensuring the performance of its Manufacturer Authorized Service Center. Independently owned MASCs or "Independent Dealers", which have been authorized by Vendor to deliver the products and services to FSA on behalf of Vendor under this Agreement, are not agents, subcontractors or employees of Vendor but are independent contractors that have no authority to make any warranties, representations, or promises to FSA on behalf of Vendor. The Independent Dealers' participation under this agreement is voluntary, and Vendor makes no warranties, guarantees, or indemnities with respect to the products and services provided by Independent Dealers.

M. Manufacturer's Suggested Retail Price (MSRP): The Manufacturer's recommended retail selling price, list price, published list price, or other usual and customary price that would be paid by the purchaser. The following are acceptable sources of current MSRPs and MSRP Lists for use in submission of the bid solicitation and the resulting contract:
    a. Manufacturer's Computer Printouts

b. Manufacturer's Annual U.S. Price Book
c. Manufacturer's official website

N. Non-Scheduled Option: Any optional new or unused component, feature or configuration that is not included or listed in the FSA Base Specifications or options provided by the Vendor.

O. Production Cutoff: A date used by manufacturers to notify vendors and dealers that the manufacturer has reached maximum capacity for orders or are discontinuing the production of an item. Vehicle manufacturers use this term when referring to any given model year for production.

P. Published List Price: A standard "quantity of one" price currently available to government and educational purchasers, excluding cooperative or volume discounts.

Q. Purchase Order: An official request for order from a purchaser to an awarded Vendor for an item that has been awarded on this contract. Purchase Orders placed using this contract formalize the terms and conditions of this contract under which a Vendor furnishes items to a purchaser.

R. Purchaser: A purchaser is an entity that seeks to obtain items awarded on this contract by meeting the eligible user criteria.

S. Qualifications Packet: This document contains the required forms, attestations, authorizations, and organizational information needed by Bidders to submit a successful and complete bid.

T. Terms & Conditions: This document, which serves as the governing Invitation to Bid and contract for the identified FSA CPP Invitation to Bid and resulting contract(s). Standard regulations, processes, procedures, and compliance requirements are identified herein. Bidders complete a Qualifications Packet during the bid process indicating they agree to comply with the Terms & Conditions, and that this will serve as a contract for both parties, should the Bidder(s) receive award.

U. Third Party Supplier: Businesses external to a Bidder or Vendor that provide products and services which contribute to the overall finished item in this contract. Third Party Suppliers are contractors under the direction and responsibility of the Bidder or Vendor.

V. Vendor: The Bidder(s) that receive award, who agree to provide the contract items that meet the requirements and FSA Base Specifications of the contract. The Vendor must agree to the Terms & Conditions, which will serve as the governing contract. If the Vendor is not the manufacturer, the Vendor must be authorized by the manufacturer to market, sell, provide, and service all awarded items.

W. Vendor Installed: A product or service provided by the Vendor or other third party; not the factory.

1.09 ELIGIBLE PURCHASERS OF CONTRACT

Awarded bid contract pricing will be extended and guaranteed to the Florida Sheriffs Association, any unit of local government, political subdivision or agency of the State of Florida. This includes, but is not limited to counties, municipalities, sheriffs' offices, clerks, property appraisers, tax collectors, supervisors of elections, school boards or districts, water management districts, other special districts, police and fire departments, emergency response units, state universities and colleges, or other state, local or regional government entities within the State of Florida. Eligible purchaser also includes all Eligible Users as defined in F.A.C. 60A-1.001(2).

All purchasers are bound by applicable Federal and State law, local ordinances, rules and regulations for purchases made under this contract. Participating agencies cannot guarantee any order other than those ordered by the individual agency.

In addition, awarded bids can be extended and guaranteed to other entities, which can include out-of-state sales, in accordance with Vendors' individual manufacturers' agreements. Vendors that wish to extend contract pricing to entities other than those defined here are governed by their manufacturers' agreements and must agree to the Terms & Conditions.

1.10 LEGAL REQUIREMENTS

Federal, State, and local laws, ordinances, rules and regulations, including any applicable motor vehicle dealer laws, that in any manner affect the items covered herein apply. Lack of knowledge by the Bidder of applicable legal requirements will in no way be a cause for relief from responsibility.

1.11 PATENTS & ROYALTIES

The Bidder/Vendor, without exception, shall indemnify and hold harmless the Florida Sheriffs Association (FSA) and its employees from liability of any nature or kind, including costs and expenses for, or on account of, any copyrighted, patented, or unpatented invention, process, or article manufactured or used in the performance of the contract, including its use by the FSA or a purchaser.

If the Bidder/Vendor uses any design, device or materials covered by letters, patent, or copyright, it is mutually understood and agreed, without exception, that the bid prices shall include all royalties or costs in any way arising, directly or indirectly, from the use of such design, device, or materials in any way involved in the work.

1.12 FEDERAL AND STATE STANDARDS

It is the intent of FSA CPP that all specifications herein are in full and complete compliance with all Federal and State of Florida laws, requirements, and regulations applicable to the type and class of commodities and contractual services being provided.

In addition, any applicable Federal or State legal or regulatory requirements that become effective during the term of the Terms & Conditions, regarding the items and services specifications, safety, and environmental requirements shall immediately become a part of the Terms & Conditions. The Vendor shall meet or exceed any such requirements of the laws and regulations. If an apparent conflict exists, the Vendor shall contact the FSA CPP immediately.

1.13 UNDERWRITERS' LABORATORIES

Unless otherwise stipulated in the bid, all manufactured items and fabricated assemblies shall be Underwriters' Laboratories, or U.L., listed or re-examination listing where such has been established by U.L. for the item(s) offered and furnished.

1.14 AMERICANS WITH DISABILITIES ACT

To request this material in accessible format, sign language interpreters, information on access for persons with disabilities, or any accommodation to review any document or participate in any FSA sponsored proceeding, please contact FSA Human Resources at (850) 877-2165 five business days in advance to initiate your request. TTY users may also call the Florida Relay Service at 711.

1.15 REASONABLE ACCOMMODATION

In accordance with the Title II of the Americans with Disabilities Act, any person requiring an accommodation because of a disability at the bid opening must contact the FSA Human Resources at (850) 877-2165.

1.16 DISADVANTAGED BUSINESSES

As part of the solicitation process FSA CPP makes information publicly available to potentially qualified entities, and conducts additional outreach to qualified:

- Small businesses,
- Minority-owned small businesses,
- Women-owned small business enterprises, and
- Disadvantaged business enterprises.

FSA CPP takes necessary affirmative steps to ensure that minority businesses, women's business enterprises, and labor surplus area firms are used, when possible, as recommended by 2 C.F.R. § 200.321. FSA CPP will:

- Evaluate whether small, minority, and women's businesses are potential sources,
- Place those qualified small and minority businesses and women's business enterprises on solicitation lists, and
- Search the Small Business Administration, Minority Business Development Agency, and Labor Surplus Area reports for additional potential sources.

Bidders self-certify in the Qualifications Packet whether they meet the state and federal definitions of a small business, minority-owned small business, women-owned small business enterprise, and disadvantaged business.

1.17 ANTI-DISCRIMINATION

The Bidder certifies that they are in compliance as applicable by federal or state law with the non-discrimination clause contained in Section 202, Executive Order 11246, as amended by Executive Order 11375, relative to equal employment opportunity for all persons without regard to race, color, religion, sex or national origin.

1.18 BEST COMMERCIAL PRACTICES

The apparent silence or omission of any description from the specifications shall be regarded as meaning that only the best commercial practices, size, and design are to be used. All workmanship is to be first quality. All interpretations of FSA Base Specifications shall be upon the basis of this statement.

1.19 PUBLIC ENTITY CRIMES (PEC)

In accordance with the Public Entity Crimes Act, Section 287.133, Florida Statutes, a person or affiliate who has been placed on the convicted vendor list, maintained by the State of Florida Department of Management Services following

a conviction for public entity crimes, may not submit a bid on a contract to provide any goods or services to a public entity, may not submit a bid on a contract with a public entity for the construction or repair of a public building or public work, may not submit bids on leases of real property to a public entity, may not be awarded or perform work as a vendor, supplier, sub-vendor, or consultant under a contract with a public entity, and may not transact business with any public entity in excess of the threshold amount provided in Section 287.017, Florida Statutes, for CATEGORY TWO for a period of 36 months from the date of being placed on the convicted vendor list.

1.20 TAX EXEMPTION

Purchasers making a purchase pursuant to the awarded bid are generally exempt from Federal Excise and State Sales Tax. It is the responsibility of the purchaser to furnish such Certificate Number.

The Florida Sheriffs Association is a 501(c)3 organization and is exempt from all Federal Excise and State Taxes. The FSA State Sales Tax and Use Certificate Number is 85-8012646919C-3.

1.21 ORDER OF PRECEDENCE IN THE EVENT OF CONFLICT

In the event of conflict, the conflict may be resolved in the following order of priority (highest to lowest):

- Addenda to Contract Terms & Conditions, if issued
- Contract Conditions
- General Conditions
- Addenda to FSA Base Specifications, if issued
- FSA Base Specifications
- Bidder Instructions

1.22 COMMUNICATIONS

Communications between a Bidder, lobbyist or consultant and FSA are limited to matters of process or procedure and shall be made in writing to the FSA CPP Staff.

Bidders should not rely on representations, statements, or explanations other than those made in this Invitation to Bid or in any written addendum to this Invitation to Bid, and no oral representations, statements, or explanations shall be deemed to bind the FSA or eligible users.

1.23 CLARIFICATION AND ADDENDA

Any questions or clarifications concerning the Invitation to Bid shall be submitted to FSA CPP by e-mail to CPP@flsheriffs.org with the bid title and number referenced on all correspondence. Final questions must be received by the date for Request for Clarification stated on the Bid Calendar. Questions and answers will be posted to the FSA CPP website on the date indicated on the Bid Calendar. Questions received during the cone of silence date listed on the bid calendar will not be addressed, except as provided herein.

Interpretation of the specifications or any solicitation documents will **not** be made to the Bidder verbally, and if any verbal clarifications are provided, they are without legal effect. FSA CPP will make every attempt to e-mail updates to registered Bidders. However, posting to the FSA CPP website or the Bid System constitutes proper notice of addenda.

The FSA CPP shall issue a Formal Addendum if substantial changes that impact the submission of bids are required. Any such addenda shall be binding on the Bidder and shall become a part of the solicitation document. In the event of conflict with the original specifications, addenda shall govern to the extent specified. Subsequent Formal Addenda shall govern over prior Formal Addenda only to the extent specified. The FSA will not be responsible for any explanation or interpretation made verbally or in writing except those made through the posting of a Formal Addendum.

The bid submission constitutes acknowledgment of addenda to the FSA Base Specifications. Bids that fail to account for the specification addenda shall be determined to be nonresponsive; however, the FSA CPP may waive this requirement when in its best interest.

After the start of the contract term, FSA CPP will notify all Vendors of any addenda and will require acknowledgement of the new terms and conditions. If the Vendor does not agree to the new terms and conditions, the Vendor's award can be removed or replaced by another Vendor or qualified responsive bidder.

1.24 SIGNED BID CONSIDERED AN OFFER

The signed bid shall be considered an offer on the part of the Bidder, which offer shall be deemed accepted upon approval by the FSA CPP. The bid submission must be signed by an authorized representative. Submission of a bid in the FSA CPP Bid System constitutes a signed bid for purposes of bid evaluation. An electronic signature may be used and shall have the same force and effect as a written signature.

1.25 ASSIGNMENT OF CONTRACT

No right or interest in this contract may be assigned, transferred, conveyed, sublet or otherwise disposed of, without prior written consent of the FSA CPP.

If the original Vendor sells or transfers all assets or the entire portion of the assets used to perform this contract, a successor-in-interest must perform all obligations under this contract. FSA CPP reserves the right to reject the acquiring entity as Vendor. A change of name agreement will not change the contractual obligations of the Vendor.

In the event a manufacturer reassigns the product line to an alternate company, the Vendor is required to notify the FSA CPP in writing of the change within 10 business days of the reassignment. If the Vendor is not already an approved FSA CPP Vendor, the alternate company is required to submit a Qualifications Packet to the FSA CPP to become an approved Vendor ***prior to*** conducting any qualified sales. FSA CPP may approve such assignments of existing or new vendors at its discretion. The Vendor is required to honor the contract pricing and all of the applicable Terms & Conditions throughout the remaining term of the contract.

1.26 TERMINATION OF PRODUCT LINE

If a Vendor terminates a product line (manufacturer or brand), the Vendor is required to notify the FSA CPP within 10 business days of the decision not to retain the product line. FSA CPP may remove the terminated products from the contract.

1.27 DEMONSTRATION OF COMPETENCY

Bidders must be able to demonstrate a good record of performance for a reasonable period of time, and have sufficient financial support, equipment and organization to ensure they can satisfactorily execute the services if awarded a contract under the terms and conditions herein stated.

The terms "equipment" and "organization" as used herein shall be construed to mean a fully equipped and well-established company in line with the best business practices in the industry and as determined by the FSA CPP.

The FSA CPP may consider any evidence available and may require submission of supporting documentation regarding the financial, technical and other qualifications and abilities of a Bidder, including past performance with the FSA CPP, in making the award.

FSA CPP may inspect the Bidder's facility prior to the award of contract. Bids will only be considered from firms which are regularly engaged in the business of providing the goods or services described in this Invitation to Bid.

Information submitted in the bid may not be plagiarized and, except in the case of materials quoted from this solicitation or developed by the manufacturer, must be the original work of the individual or company that submits the bid for evaluation.

1.28 VENDOR ABILITY TO PERFORM

The FSA CPP may require Bidders to show proof that they have been designated as authorized representatives of a manufacturer or supplier, which is the actual source of supply. In these instances, the FSA CPP may also require information from the source of supply regarding the quality, packaging and characteristics of the products. Any conflicts between this material information provided by the source of supply and the information contained in the bid submission may render the bid nonresponsive.

During the contract period, FSA CPP may review the Vendor's record of performance and may require submission of supporting documentation to ensure that the Vendor is providing sufficient financial support, equipment and organization.

If the FSA CPP determines that the Vendor no longer possesses the financial support, equipment and organization in order to comply with this section, FSA has the authority to immediately terminate the contract.

By responding to this Invitation to Bid, the Vendor warrants that, to the best of his or her knowledge, there is no pending or threatened action, proceeding, or investigation, or any other legal or financial condition, that would in any way prohibit, restrain, or diminish the Vendor's ability to satisfy the obligations of a resulting contract. The Vendor warrants that neither it nor any affiliate is currently on the convicted vendor list maintained pursuant to Section 287.133 of the Florida Statues, or on any similar list maintained by any other state or the federal government. The Vendor shall immediately notify the FSA CPP and purchaser in writing if its ability to perform is compromised in any manner during the term of the contract.

1.29 FINANCIAL RESPONSIBILITY

Bidder affirms by the submission of the bid and by signature on the contract signature form that the Bidder:

- Has fully read and understands the scope, nature, and quality of work to be performed or the services to be rendered under this bid and has adequate facilities and personnel to fulfill such requirements.

- Accepts the financial responsibility associated with this bid and declares that they have the access to capital (in the form of liquidity or credit lines) in order to meet the financial demands of such award.
- Has assessed the financial responsibility required to serve the contract as bid, including such details as the obligations to perform all items bid, zones bid, and quantities that could be ordered, as well as timing of payment from purchasers, which can be 45 calendar days from receipt of invoice.

1.30 QUALITY AND SAFETY

All materials used for the manufacture or construction of any supplies, materials or equipment covered by this bid shall be new. The items bid must be new, the latest model, of the best quality, and highest-grade workmanship that meet or exceed federal safety standards.

Items requiring certification should require certification of options in cases where non-certified options could result in the decertification of the original product or warranty. In all cases where options are not certified, the Vendor must disclose to the end user that the non-certified options are not required to be certified. All options must meet or exceed federal safety standards.

1.31 NONCONFORMANCE

Items may be tested for conformance with specifications. Items delivered that do not conform to specifications may be rejected and returned at the Vendor's expense.

Any violation of these stipulations may also result in:

- Vendor's name being removed from the awarded vendor list.
- FSA and purchasers being advised not to do business with Vendor.

1.32 GRATUITIES

Bidders shall not offer any gratuities, favors, or anything of monetary value to any official, employee, or agent of the FSA, for the purpose of influencing consideration of this bid. Bidders shall disclose in writing any conflicts of interest to FSA prior to any award, or as soon as practicable after learning of any such conflict, including any contractual or employment relationships with FSA or potential purchasers of Bidders' products or services.

1.33 TIE BIDS

FSA CPP has the right to award multiple Bidders the primary or alternate award in the event of a tie. In the event the FSA CPP desires to break tie bids, and businesses have qualifying drug-free work programs, the award will be made using the following criteria, in order:

- Bidder within the State of Florida
- Vendors' performance record with purchasers
- Coin Toss

1.34 RIGHT TO AUDIT

Vendor shall establish and maintain a reasonable accounting system that enables FSA CPP to readily identify Vendor's sales. FSA CPP and its authorized representatives shall have the right to audit and to make copies of all related records

pertaining to this contract, including all government sales and eligible user information, whether kept by or under the control of the Vendor, including, but not limited to those kept by its employees, agents, assignees, successors, sub-vendors, or third-party suppliers in whatever form they may be kept – written or electronic. Such records shall include, but not be limited to:

- Accounting records, including but not limited to purchase orders, confirmation of orders or invoices, paid vouchers;
- Written policies and procedures;
- Original estimates, quotes, or work sheets;
- Contract amendments and change order files;
- Insurance documents; or
- Memoranda or correspondence.

Vendor shall maintain such records during the term of this contract and for a period of three (3) years after the completion of this contract. Upon written notice from FSA CPP, the Vendor shall provide such records for inspection and audit by FSA CPP or its authorized representatives. Such records shall be made available to FSA CPP during normal business hours within three business days of receipt of the written notice. FSA CPP may select the Vendor's place of business or offsite location for the audit. The FSA CPP may also request the Vendor provide requested records via e-mail.

Vendor shall ensure FSA has these rights with Vendor's employees, agents, assignees, successors, and third-party suppliers, and the obligations of these rights shall be explicitly included in any subcontracts or agreements formed between the Vendor and any sub-vendors, which do not include the Independent Dealers to the extent that those subcontracts or agreements relate to fulfillment of the Vendor's obligations to FSA.

Professional fees, personnel costs and travel costs incurred by FSA under its authority to audit and not addressed elsewhere will be the responsibility of the FSA. However, if the audit identifies underreporting, overpricing or overcharges (of any nature) by the Vendor to FSA or a purchaser in excess of three percent (3%) of the total contract billings, the Vendor shall reimburse FSA for the total costs of the audit not to exceed $5,000. If the audit discovers substantive findings related to fraud, misrepresentation, or non-performance, FSA may recoup all the costs of the audit work from the Vendor.

Any adjustments or payments that must be made as a result of any such audit or inspection of the Vendor's invoices or records shall be made within a reasonable amount of time (not to exceed 60 calendar days) from presentation of FSA's findings to Vendor.

FSA has the right to assess damages or seek reimbursements or refunds based on audit results.

1.35 LICENSES AND PERMITS

The Bidder shall obtain and pay for all applicable licenses, permits and inspection fees for this bid submission and any resulting contract. Where Vendors are required to enter or go onto FSA or purchaser property to deliver materials or perform work or services as a result of a bid award, the Vendor will assume the full duty, obligation and expense of obtaining all necessary licenses, permits and insurance.

The Bidder must, by the time of award, be registered to do business in the State of Florida on SunBiz.gov.

1.36 PERFORMANCE BONDS

Purchasers may request a performance bond from a Vendor. Performance bonds are recommended with pre-payment and will be at the expense of the requesting agency. Purchasers should determine the best practice in comparing performance bond expense against any prior discounts that may be available.

1.37 ELIMINATION FROM CONSIDERATION

This Invitation to Bid shall not be awarded to any person or Bidder who has outstanding debts to the FSA, whether in relation to current or previous bid awards or for other business purposes.

1.38 INDEPENDENT PREPARATION

A Bidder shall not, directly or indirectly, collude, consult, communicate or agree with any other Bidder as to any matter related to the bid each is submitting. Additionally, a Bidder shall not induce any other Bidder to modify, withdraw, submit, or not submit a bid.

Bidders or Vendors who are found to have engaged in these acts will be considered nonresponsive and will be suspended or barred from bid participation. Any contract award resulting from these acts may be terminated for default. Further, any such acts detected by the FSA may be reported to relevant law enforcement and/or prosecutorial agencies.

Bidders may submit multiple bids without violating this provision if the bid submitted is not from the same manufacturer and product line. Dealers that share the same ownership may submit multiple bids without violating this provision if the Bidders are not in the same region featuring the same manufacturer and product line.

1.39 DEFAULT

In case of default on the part of Vendor, the FSA CPP may take necessary steps to otherwise procure the products sought, including but not limited to procuring the products or services from the next highest ranked Bidder or from other sources. A defaulting Vendor may be held liable for costs incurred by the FSA in procuring replacement products.

1.40 PROTESTS AND ARBITRATION

Any person who is adversely affected by the decision or intended decision to award shall file a “Notice of Protest” in writing to the FSA CPP within three (3) business days after the posting of the Intent to Award and shall file a formal written protest within five (5) business days after filing the Notice of Protest. Failure to file both a notice of protest and a formal written protest within the above referenced timelines shall constitute a waiver of proceedings.

The burden is on the party protesting the award of the bid to establish grounds for invalidating the award(s). The formal written protest must state with particularity the facts and law upon which the protest is based. Options are for informational purposes only and will not serve as a basis for protest. Failure to do so will result in a denial of protest.

Formal written protest which states with particularity the facts and law upon which the protest is based will be reviewed by FSA legal counsel for legal soundness and validity, and corrective action will be taken as needed contingent upon the validity of such claims. However, any additional time required and cost incurred by the FSA to substantiate a protesting party's claim(s) beyond the normal scope of its legal review due to the vague or inconclusive nature of the protesting party's filing will be reimbursable to the FSA and deducted from the protesting party's bond or security which must accompany their filing.

Any Bidder who files an action protesting a decision or intended decision pertaining to this contract shall post a bond, cashier's check or money order payable to the Florida Sheriffs Association in the amount equal to ten percent of the item being protested. The bond, cashier's check or money order must be filed at the time of filing the formal written protest or within the five (5) business day period allowed for filing the formal written protest. FSA CPP will provide the amount required within two (2) business days of the notice of protest received. This bond or security will be conditioned upon the payment of all costs which may be adjudged against the protesting party in a court of law and/or to reimburse the FSA for additional legal expenses incurred and required to substantiate the protesting party's claim(s). Failure to post the bond or security requirement within the time allowed for filing will result in a denial of protest. The filing of the protest shall not stay the implementation of the bid award by the Florida Sheriffs Association.

Should the unsuccessful Bidder(s) decide to appeal the decision of the FSA, they shall file a notice to FSA CPP within three (3) business days of the FSA bid protest decision regarding their intent to request arbitration. A demand for arbitration with the American Arbitration Association's (AAA) commercial panel under its rules and regulations must be made within ten (10) business days of the FSA bid protest decision. Any person who files for an arbitration with the AAA shall post with the Florida Sheriffs Association at the time of filing the formal written arbitration request, a bond, cashier's check or money order payable to the Florida Sheriffs Association in the amount equal to ten percent of the product line being protested. This amount will be the same amount as the FSA CPP provided at the time of filing the initial protest. Failure to provide written notice to FSA CPP, file a demand for arbitration with the AAA, or failure to post the required bond and security requirement within the specified timelines shall constitute a waiver of arbitration proceedings. By responding to this procurement, the Bidder expressly agrees to the use of mandatory binding arbitration to resolve any appeals of the decision of the FSA, and any claims arising from or in any way relating to the procurement process, and expressly waives any and all rights that it may otherwise have to pursue such claims in any other forum, judicial or otherwise.

If the party filing for arbitration does not prevail, it shall pay all costs, legal expenses and attorney fees of the prevailing party incurred in connection with the arbitration. However, if the filing party prevails, the parties shall share equally the fees and expenses of the arbitration and AAA and each shall bear the cost of their own attorney fees. The filing for arbitration shall not stay the implementation of the bid award by the Florida Sheriffs Association.

1.41 NONPERFORMANCE

By virtue of the bid submission, Bidder acknowledges its obligation to sell items in all zones for which it is awarded. Upon award, failure of the Vendor to comply with these requirements may result in the imposition of liquidated damages of $500 per item, which amount the Vendor agrees is reasonable, or probation, suspension, termination or a combination thereof from current and future bids at the FSA CPP's discretion.

The Vendor shall at all times during the contract term remain responsive and responsible. In determining Vendor's responsibility, the FSA CPP shall consider all information or evidence that demonstrates the Vendor's ability or willingness to fully satisfy the requirements of the Terms & Conditions.

Vendors that are not in compliance with any of the provisions of this contract can be assessed liquidated damages, suspended or terminated from the contract. The FSA CPP at its sole discretion may remove a noncompliant Vendor from future competitive bid solicitations; or take other actions including suspension from the contract until compliance issues are resolved, limit current or future vendor participation by items or zones, or other actions as determined by FSA CPP at its sole discretion.

At FSA CPP's discretion, Vendors may be required to develop corrective action plans to address contract compliance. Failure to abide by corrective action plans will result in termination from the existing contract and future competitive bid solicitations at the discretion of the FSA CPP.

In situations where there is evidence that the Vendor has engaged in egregious breaches of the contract with respect to either the FSA CPP and/or the purchaser, the contract can be terminated and the Vendor will be removed from future solicitations for a period of up to three (3) years, or a permanent ban from the bid process at the sole discretion of FSA CPP.

Specific conditions for termination include, but are not limited to; failure to perform, refusal to accept orders during the contract period while manufacturer orders are still being accepted for current model year or the new year if the vehicle is price protected by the factory, charging amounts exceeding MSRP on factory or Vendor installed items and packages, requiring the purchase of additional options over and above the base vehicle as a condition of acceptance of order, providing aftermarket options where factory options are available without the consent of the purchaser, any misrepresentation of optional equipment or service as being factory that fails to meet the definition as described in this document, and any other practice deemed to be inconsistent with the intent of the contract.

Any Vendor presented with a valid Purchase Order consistent with Vendor bid quotes or other agreed upon terms and pricing is required by this contract to accept such purchase order and deliver the product. Purchase Orders must be fulfilled whether or not the Purchase Order includes options. The Vendor must deliver this product in accordance with the Terms & Conditions – regardless of whether doing so will provide the Vendor with a profit or loss.

Failure to deliver the item may result in the purchaser seeking damages for the difference of cost to issue a new Purchase Order with another Vendor plus any legal fees and damages that may be incurred in the process to facilitate a completed order. Additionally, FSA CPP may seek damages for nonpayment of administrative fees, to which FSA CPP is entitled, according to Section 3.21, and any attorney's fees incurred in the recovery of these damages.

1.42 SEVERABILITY

In the event any provision of this contract is held to be unenforceable for any reason, the unenforceability thereof shall not affect the remainder of the contract, which shall remain in full force and effect and enforceable in accordance with its terms.

1.43 TERMINATION FOR CAUSE

If through any cause within the reasonable control of the Vendor, it shall fail to fulfill in a timely manner, or otherwise violate any of the terms of this contract, the FSA CPP shall have the right to terminate the services remaining to be performed. Written notice of the deficiencies shall be given to the Vendor and unless the deficiencies are corrected within ten (10) business days, the contract may be terminated for cause immediately. The right to exercise the option to terminate for cause shall be in the sole discretion of the FSA CPP, and the failure to exercise such right shall not be deemed to constitute a waiver of this right.

In the event of a termination for cause, the purchaser shall compensate the successful Bidder in accordance with the contract for all services performed by the successful Bidder prior to termination, net of any costs incurred by the purchaser and FSA as a consequence of the default.

Notwithstanding the above, the Vendor shall not be relieved of liability to the FSA for damages sustained by the FSA by virtue of any breach of the contract by the Vendor, and the FSA CPP may reasonably withhold payments to the Vendor for the purposes of offset until such time as the exact amount of damages due the FSA from the Vendor is determined.

1.44 TERMINATION WITHOUT CAUSE

The FSA CPP can terminate the contract in whole or part without cause by giving written notice to the Vendor of such termination, which shall become effective thirty (30) calendar days following receipt by Vendor of such notice.

In the event of termination without cause, all finished or unfinished documents and other materials shall be properly delivered to the FSA CPP.

The Vendor shall not furnish any product after it receives the notice of termination, except as necessary to complete the continued portion of the contract, if any. The Vendor shall not be entitled to recover any lost profits that the Vendor expected to earn on the balance of the contract or cancellation charges.

Any payments to the Vendor shall be only to the total extent of the purchaser liability for goods or services delivered prior to the date of notice to terminate the contract.

1.45 CONTRACT ADVERTISEMENT AND USE OF FSA LOGO

The FSA logo is an official logo of the Florida Sheriffs Association designed to promote the program. The logo may be used by Vendors in accordance with this policy. Use of the logo is limited to the original version received from the FSA. Modifications are not permitted.

Methods of use include, but are not limited to:

- Electronic mediums such as websites, digital marketing campaigns, social media and e-mail; or
- Print media such as forms, marketing campaigns, business cards, posters, banners, brochures, flyers and postcards.

Vendors may request use of the logo by contacting cpp@flsheriffs.org, and should include a brief description of how the Vendor intends to use the logo. The official FSA sheriff's star and wreath logo may not be used without prior written permission.

2.0 BIDDER INSTRUCTIONS

2.01 QUALIFICATION

Bidders are required to complete the Qualifications Packet as part of the bid submission. A Bidder becomes a qualified bidder if they comply with this section and Section 2.09, Mandatory Pre-Bid Meeting.

Qualifications Packet information required for bid qualification include:

- Qualification form
  - Contact Information
  - Business Profile
  - References
  - Disqualifications & Defaults
  - Warranty Service Plan Attestation
  - Emergency Technician Attestation
- Compliance Attestations
  - E-Verify
  - Sunbiz
  - Drug-Free Workplace
  - Workers Compensation
  - Compliance with Applicable Federal, State, and Local Laws and Ordinances
- Insurance Checklist
  - Certificates of Insurance due five days prior to award
- W-9 Form

The Qualifications Packet is located on the Bid System.

2.02 LICENSING/FACILITIES

Vendors must maintain sales, service, and warranty repair facilities within the State of Florida to provide sales and service for the items purchased under this contract.

The FSA reserves the right to periodically request additional or updated information from Vendors regarding their sales, service, and warranty repair facilities during the solicitation and the term of the contract, if awarded.

2.03 INSURANCE AND INDEMNIFICATION

Vendor agrees to indemnify, protect, defend and hold harmless FSA, the participating agencies, and FSA's and participating agencies' officers, agents, and employees for, from and against all liabilities, claims, damages, losses, liens, fines, penalties, costs, causes of action, suits, judgments and expenses (including without limitation reasonable attorneys' fees and court costs) against, suffered or incurred by FSA and/or any participating agencies who become party to this Agreement, to the extent arising out of, caused by or resulting from the negligence in connection herewith of, or any breach of this Agreement by, Vendor or anyone acting on behalf of Vendor (excluding, for avoidance of doubt matters related to the performance of services by independently owned MASCs or Independent Dealers or other non-Vendor owned facilities to the extent any cause of action is a result of actions or inactions by independently owned MASCs or Independent Dealers or other non-Vendor owned facilities that are outside of Vendor's control), except to

the extent caused by the negligence or intentional misconduct of FSA and/or any participating agencies who become party to this Agreement.

The Florida Sheriffs Association and/or participating agencies shall give the Bidder/Vendor (2) the opportunity to take over and settle or defend any such action at Bidder's/Vendor's sole expense. Vendor's obligations under the above paragraph with respect to legal action are contingent upon the FSA and/or participating purchasers giving the vendor written notice of any action. Bidder/Vendor shall not be liable for any unreasonable cost, expense or compromise incurred by the Florida Sheriffs Association, or participating agencies, in any legal action without Bidder's prior written consent, which consent shall not be unreasonably withheld, conditioned, or delayed.

The Insurance Checklist summarizes the Bidder's/Vendor's insurance coverage obligations, if awarded. Certificates of Insurance, evidencing such coverages and endorsements as required herein, shall be provided no later than five (5) business days prior to the contract award date. The Vendor may not begin performance under the contract until such Certificates have been approved by the FSA CPP.

The certificate must state Bid Number and Title. FSA must be included as an additional insured for the duration of the contract by way of blanket endorsement.

The Vendor shall maintain comprehensive general liability insurance and general aggregate insurance in the amount and coverage levels specified on the Insurance Checklist.

The Vendor shall specifically and distinctly assume, and does so assume, all risks of damage or injury to property or persons used or employed on or in connection with the work and of all damage or injury to any person or property wherever located, resulting from any action or operation under the contract or in connection with the work. It is understood and agreed that at all times the Vendor is acting as an independent contractor. The Vendor shall be responsible for the work and every part thereof, and for all materials, tools, appliances and property of every description, used in connection with this particular contract. The Vendor at all times during the full duration of work under this contract, including extra work in connection with this contract, shall meet the requirements of this section.

The Vendor shall maintain automobile liability insurance including property damage covering all owned, non-owned, hired and scheduled automobiles, when used in connection with the delivery or service of this contract.

The Vendor shall maintain insurance to cover garage operations in the amount specified on the Insurance Checklist when the garage is used to complete work on this contract.

All insurance policies shall be issued by companies authorized to do business under the laws of the State of Florida and these companies must have a rating of B+ or better per the AM Best Rating.

FSA CPP required insurance coverages must be maintained through the duration of the contract. Upon expiration of the required insurance, the Vendor must email updated certificates of insurance for as long a period as any work is still in progress. No change or cancellation in insurance shall be made without thirty (30) calendar days' written notice to the FSA CPP.

It is understood and agreed that all policies of insurance provided by the Vendor are primary coverage to any insurance or self-insurance the FSA possesses that may apply to a loss resulting from the work performed in this contract. All policies issued to cover the insurance requirements herein shall provide full coverage from the first dollar of exposure.

The liability insurance coverage shall extend to and include the following contractual indemnity and hold harmless agreement:

The Vendor hereby agrees to indemnify and hold harmless the FSA, a 501(c)3, its officers, agents, and employees from all claims for bodily injuries to the public and for all damages to the property per the insurance requirement under the specifications including costs of investigation, all expenses of litigation, including reasonable legal counsel fees and the cost of appeals arising out of any such claims or suits because of any and all acts of omission or commission of any by the Vendor, his agents, servants, or employees, or through the mere existence of the project under contract.

The foregoing indemnity agreement shall apply to any and all claims and suits other than claims and suits as a result of of the sole and exclusive negligence of the FSA, its officers, agents, and employees, as determined by a court of competent jurisdiction.

The Vendor will notify the insurance agent without delay of the existence of the Hold Harmless Agreement contained within this contract and furnish a copy of the Hold Harmless Agreement to the insurance agent and carrier.

The Vendor will obtain and maintain contractual liability insurance in adequate limits for the sole purpose of protecting the FSA under the Hold Harmless Agreement from any and all claims arising out of this contractual operation.

The Vendor will secure and maintain policies of third-party suppliers. Compliance by the Vendor and all third-party suppliers with the foregoing requirements as to carrying insurance and shall not relieve the Vendor and all third-party suppliers of their liabilities and obligations under any section or provisions of this contract. Vendor shall be as fully responsible to the FSA for the acts and omissions of the third-party suppliers and of persons employed by them as they are for acts and omissions of persons directly employed by the Vendor.

The FSA can request, and the Vendor shall furnish proof of insurance within seven (7) calendar days of receipt of the written request from FSA. Should the Vendor fail to provide acceptable evidence of current insurance during the contract term, the FSA CPP shall have the right to consider the contract breached and justifying the termination thereof. If Bidder does not meet the insurance requirements, the FSA may consider alternate insurance coverage.

2.04 SPECIFICATIONS

All items covered by this Invitation to Bid and any resulting contract, and the specifications shall be the manufacturer's current basic production model, and shall, as a minimum, be equipped with all standard factory equipment in accordance with the manufacturer's latest literature unless otherwise noted in the Bid System or FSA Base Specifications.

The FSA Base Specifications are contained in the FSA CPP Bid System, may be requested from FSA CPP, and are retained within FSA CPP's archive. As part of the bid submission, Bidders will be required to provide confirmation that the item bid meets the FSA Base Specifications. FSA CPP may reject bids that fail to provide confirmation that the item(s) bid meet the FSA Base Specifications.

FSA CPP develops the specifications with subject matter experts and publicly available information. However, FSA CPP does not have access to full details from the manufacturer and relies on Bidders to assist in this process. Bidders should immediately notify the FSA CPP of any inaccuracies in the specifications. All notifications of inaccuracies must be in writing.

If awarded a contract, Vendor(s) must offer and supply an item that either meets or exceeds all the requirements included in the applicable FSA Base Specifications, unless a purchaser specifically issues a Purchase Order for a base item and option that differs from the FSA Base Specifications. Failure of a Bidder to comply with these provisions will result in Bidders being held responsible for all costs required to bring the item into compliance with the contract specifications.

2.05 SEALED BIDS

For purposes of this solicitation, a sealed bid is considered a bid submitted using the FSA CPP Bid System.

2.06 EXCEPTIONS

Any requested exceptions, deviations, or contingencies a Bidder may have to the Terms & Conditions must be documented in Bidder's submission. Exceptions to the FSA Base Specifications at the time of the bid submission shall reference the item number, make and model. FSA CPP has the discretion to grant or deny, in whole or in part, the Bidder's requested exception, deviation or contingency to the specifications or Terms & Conditions. Bidder acknowledges that the bid may be disqualified if FSA CPP rejects the proposed exceptions.

2.07 MISTAKES

Bidders are expected to examine the FSA Base Specifications, delivery schedules, bid prices, and all information pertaining to servicing this contract before submitting a bid. Failure to do so will be at the Bidder's risk.

2.08 EQUIVALENTS

Prior to the opening of the Bid System, Bidders may request item equivalents. The Bidder must submit the manufacturer name and model number (or product identifier) of each equivalent requested to FSA CPP. Complete, descriptive, technical literature should demonstrate that the equivalent conforms with FSA Base Specifications. If a bid uses equivalents without prior approval, the bid may be disqualified.

FSA lists specification groups and not specific makes and models for this bid. Bidders are permitted to offer alternate makes and models they are authorized to sell when bidding. When selling equivalents, vendors must disclose to the purchaser that an approved equivalent is being offered.

2.09 MANDATORY PRE-BID MEETING

Prospective Bidders are required to attend or participate in the **mandatory** Pre-Bid Meeting. The Pre-Bid Meeting is designed for vendors, the Fleet Advisory Committee and the FSA CPP to clarify questions on the Terms & Conditions and to confirm all FSA Base Specifications. Questions relating to the items, specifications, the bid process, or award can be asked at the Pre-Bid Meeting. Bidders have the opportunity to suggest technical modifications or corrections before the FSA Base Specifications are finalized.

FSA CPP reserves the right to grant attendance exceptions to the mandatory meeting if the Bidder has requested authorization, agrees in writing to meet all the Terms & Conditions without exception and further waives their right to protest the bid process in its entirety or any portion thereof.

2.10 PRICES QUOTED

Prices submitted as indicated in the sealed bid are final. Bidders acknowledge that prices quoted will be valid for a period of sixty (60) calendar days from the date of bid opening. Each item, make, and model must be priced and bid separately. Prices quoted in the bid submission should reflect the final amount the Bidder can expect to receive for payment for the items bid for the duration of the contract, unless otherwise provided in the contract. These prices must be inclusive of all components included in the FSA Base Specifications.

Prices bid, including options, must include the administrative fee FSA charges to administer the contract, as outlined within these Terms & Conditions. The administrative fee is three quarters of one percent (.0075).

Prices must be Free on Board (FOB) destination and must include delivery to the purchaser.

2.11 OPTION PRICING

The FSA CPP has the discretion to disqualify Bidders if the option pricing is excessive. In order to determine if pricing is excessive, Bidders agree to provide documentation, except confidential and proprietary business information, to FSA CPP to verify cost at any time during the solicitation process or during the contract term. This information is for comparison purposes and will not be published.

The use of options to facilitate the sale of an alternate manufacturer's product which is outside the scope of the FSA Base Specifications will be determined nonresponsive and the bid will be rejected in whole or part by the FSA CPP. Bidders must disclose which options require the purchase of other options or are dependent on another option in their bid submission.

Option pricing will include all costs of labor associated with the option and cost of labor should not be listed separately, with the exception of purchaser-owned wheel assemblies where the cost of labor is the sole item bid for Specifications 8-10. For Specifications 8-10, the purchaser is responsible for the tire mount installation on the wheel assemblies of the vehicle or piece of equipment unless the purchaser elects the tires installed on purchaser-owned wheel assembly option.

2.12 BID SUBMISSIONS

Bidders must submit a bid electronically using the Bid System. Bid submissions include a price for each item and option bid in accordance with Sections 2.10 and 2.11. Each Bidder must submit a Qualifications Packet for each bid. The bid must be received by the date and time specified on the Bid Calendar in Appendix A. Failure to meet all submission requirements by the date indicated on the Bid Calendar will result in rejection of the bid.

Bid System: VendorLink
The Bid System is located at https://www.myvendorlink.com. Bidders are encouraged to participate in training provided. Usernames and passwords will be issued to Bidders after registering in the Bid System. Contact VendorLink at support@evendorlink.com if technical issues arise during bid submission.

Bid Submission
To ensure correct bid submittal and formatting, Bidders shall:

- Upload files as instructed in the Bid System; files requested will be in Excel or .pdf.
- Follow all instructions outlined in this Invitation to Bid and provide all requested information.

The bid shall include the following documents:

- Executed Qualifications Packet.
- Price sheet for each specification group bid.
- Any requested exceptions or equivalents.

Manufacturer's Authorized Service Center Listing

The Manufacturer's Authorized Service Center listing shall include:

- Contract Number: FSA25-TRS27.0
- Bidder's Name and FEIN
- Manufacturer's Authorized Service Center:
  - Company Name
  - Address
  - City
  - Zip
  - Telephone
  - Contact Name
  - MWBE Status, if available
  - Email address

2.13 EXECUTION OF BID

By submitting a response to this Invitation to Bid, the Bidder agrees to the Terms & Conditions and to be bound by such Terms & Conditions if selected for award. The Bidder must submit the Contract Signature Form with the signature of an authorized representative no later than five (5) business days prior to the contract award date.

2.14 MODIFICATION OR WITHDRAWALS OF BIDS

A Bidder may submit a modified bid to replace all or any portion of a previously submitted bid until the due date and time of the bid submission listed in the Bid Calendar. Modifications received after the bid due date and time will not be considered.

Bids can be withdrawn in writing prior to the contract award. If a Bidder must withdraw the bid, the Bidder must contact FSA CPP immediately. Bid withdrawals are handled on a case-by-case basis and can result in a limitation of participation in future bids.

2.15 LATE BIDS

The responsibility for submitting a bid before the stated due date and time on the bid calendar is solely and strictly the responsibility of the Bidder. The FSA is not responsible for delays caused by technical problems, any internet outages or delays incurred by electronic delivery, or any other occurrence. Any reference to time will be based on Eastern Time.

2.16 BID OPENING

Bids shall be opened on the date and time specified on the Bid Calendar. The bid opening will occur at the Florida Sheriffs Association, 2617 Mahan Drive, Tallahassee, Florida, or may be offered online.

FSA CPP will provide a bid inspection period for Bidders following the bid opening. The date, time and duration will be announced prior to the bid opening.

2.17 DETERMINATION OF RESPONSIVENESS

Determination of responsiveness will take place at the time of bid opening and evaluation. In order to be deemed a responsive bidder, the bid must conform in all material respects to the requirements stated in the Invitation to Bid. As set forth in Section 2.21, FSA CPP reserves the right to waive or allow a Bidder to correct minor irregularities.

2.18 RESPONSIBLE BIDDER CRITERIA

Bids will be evaluated to determine if qualifications and contract requirements are met. Responses that do not meet all requirements of this Invitation to Bid or fail to provide all required information, documents or materials may be rejected as nonresponsive. The FSA CPP will not request documentation or consider a Bidder's social, political or ideological interests in determining if the Bidder is a responsible bidder. FSA CPP will not give preference to a Bidder based on the Bidder's social, political, or ideological interests.

Bidders whose responses, past performance, or current status do not reflect the capability, integrity, or reliability to fully and in good faith perform the requirements of the contract may be rejected as non-responsible. In determining a responsible Bidder, the following factors may be considered:

- Adequacy of facilities, staffing, and financial resources;
- Previous experience with FSA contract or other similar government contracts;
- Ability to provide excellent customer service, including on previous FSA contracts; and
- Any other information relevant to the responsibility of a Bidder of which FSA CPP is aware.

In addition to the requirements set forth by these Terms & Conditions, FSA CPP reserves the right to request staffing, performance and financial information from any Bidder during the evaluation process.

FSA CPP reserves the right to determine which responses meet the requirements, specifications, Terms & Conditions of the solicitation, and which Bidders are responsive and responsible.

FSA CPP further reserves the right to limit participation of Bidders who, in FSA CPP's sole discretion, are determined to present responsibility concerns that call into question the Bidder's ability to perform but that do not rise to the level of requiring rejection of the Bidder as non-responsible.

2.19 BASIS FOR AWARD

The FSA CPP shall make award to the qualified, responsive and responsible Bidder(s) who submitted the lowest Bid Price by specification and by manufacturer.
Awards will not be given to any parties listed on the government wide exclusion in the System for Award Management.

FSA CPP reserves the right to accept or reject any and all bids, and to waive any minor irregularity, technicality or omission if it determines that doing so will serve the purchaser's best interest. FSA CPP reserves the right to make multiple awards for each item, if determined to be in the best interest of the FSA and the purchasers.

Awards will be posted on the FSA CPP website according to the date posted in the bid calendar.

2.20 BID TABULATIONS

The bid tabulation report will be posted on the FSA CPP website after the bid submission closes.

If there is a delay in posting the bid tabulation results, FSA CPP will post a notice of the delay and a revised date for posting of results.

2.21 MINOR IRREGULARITIES/RIGHT TO REJECT

The FSA CPP has the right to accept or reject any and all bids, or separate portions thereof, and to waive any minor irregularity, technicality or omission if the FSA CPP determines that doing so will serve its best interest or the best interest of the purchasers. A minor irregularity is a variation from the Terms & Conditions of this procurement that does not affect the price of the bid or give the Bidder a substantial advantage over other Bidders and thereby restrict or stifle competition and does not adversely impact the interests of the FSA or the purchasers. At its option, the FSA CPP may allow a Bidder to correct minor irregularities but is under no obligation to do so. In doing so, the FSA CPP may request a Bidder to provide clarifying information or additional materials to correct the irregularity. However, the FSA CPP will not request, and a Bidder may not provide the FSA CPP with additional materials that affect the price of the bid or give the Bidder an advantage or benefit not enjoyed by other Bidders.

The FSA CPP may also reject any bids not submitted in the manner specified in this document.

2.22 CONE OF SILENCE

This Invitation to Bid is subject to the Cone of Silence that begins the date the bid submission opens through the intent to award date as indicated in the Bid Calendar. During this period, all communications regarding this solicitation between FSA and Bidder will cease, except for procedural questions, questions regarding problems incurred in the use of the Bid System, or communications initiated by the FSA CPP. All permitted communications during this period shall be made in writing to the contact identified in Section 1.01 of this Invitation to Bid.

3.0 CONTRACT CONDITIONS

3.01 GENERAL REQUIREMENTS

Once the bid has been awarded, the terms and conditions of this document become the contract between the FSA CPP and the awarded Vendor. The Terms & Conditions apply to all items purchased from this contract.

3.02 STATEMENT OF AUTHORITY

Each person signing the contract warrants that they are duly authorized to do so and binds the respective party to the contract.

3.03 VENDOR CONTACT INFORMATION

The Vendor shall maintain current contact information with FSA CPP at all times for sales and submission of purchase orders, quarterly reports and administrative fee payments. If a change occurs during the contract, the Vendor must notify FSA CPP immediately.

3.04 CONTRACT EXTENSION

Contract Extension
The contract may be extended by mutual agreement for up to two (2) additional years, on a year-to-year basis. FSA CPP reserves the right to execute a contract extension or to allow the contract to fully or partially terminate and readvertise for bids, whichever is in the best interest of FSA.

The Vendor may request price adjustments for contract extensions as provided for herein. If no request is received from the Vendor, the FSA CPP will assume that the Vendor has agreed that the optional term may be exercised without a price adjustment. Any adjustment request received after the execution of an extension may not be considered unless otherwise provided for in this contract.

Month-to-Month Continuation
In the event a new contract is not active at the time of this contract's expiration, this contract's terms and conditions shall extend on a month-to-month basis and shall not constitute an implied extension of the contract. Such a month-to-month continuation shall be upon the compensation and payment provided herein.

3.05 ADDITIONS AND DELETIONS

FSA CPP reserves the right to add or delete any items from this bid or resulting contract when deemed to be in the best interest of FSA and purchasers, at its discretion. This decision to take action may be based upon and not limited to few or no sales, product recalls and other safety issues, Vendor or manufacturer performance, or the product's lack of relevance.

For items that come to market during the contract term, FSA CPP may authorize qualified and awarded Vendors to offer the new item under the existing contract terms and conditions, if the manufacturer authorizes a Vendor to sell the item. FSA CPP will request awarded Vendors submit pricing and will evaluate the responses prior to authorizing awarded Vendors to offer the new item.

3.06 PRICE ADJUSTMENT

In addition to the cost-plus-percent pricing adjustments available, the Terms & Conditions provide the following methods of price adjustments:

- Annual Price Adjustments
- Changes to Manufacturer Production or Design
- Manufacturer Certified Adjustments
- Equitable Adjustments

Price adjustment requests must clearly substantiate a need to increase or decrease the price. Price adjustments will not be considered if Vendors are delinquent on administrative fee payments or have outstanding quarterly reports.

Annual Price Adjustment

The FSA CPP may consider annual price adjustments due to:

- Changes in the Producer Price Index (PPI) as published by the U.S. Department of Labor, Bureau of Labor Statistics (BLS); or
- As a result of changes to national or state standards that require substantial price adjustments.

FSA CPP may consider other documentation related to the change to national or state standards but is not obligated to grant price changes without literature from the manufacturer. The FSA CPP will consider the request and will make a final determination on the change in price.

Changes to Manufacturer Production or Design

Significant changes by the manufacturer to the production of and specification design may initiate a price adjustment request. FSA CPP will consider order dates, production factors, model year, or other conditions, as well as the replacement or complete redesign of items. Vendors must provide documentation from the manufacturer.

Manufacturer Certified Adjustments

Vendors must provide documentation from the manufacturer to FSA CPP that shows the additional costs or price adjustments imposed by the manufacturer and substantiate the need for a related price adjustment for this contract.

Equitable Adjustments

The FSA CPP may make an equitable adjustment to the contract terms or pricing at its discretion.

3.07 CONDITIONS

It is understood and agreed that any item offered or shipped as a result of this bid shall be the most current model offered.

3.08 FACILITIES

The FSA CPP reserves the right to inspect the Vendor's applicable facilities at any time with prior notice.

3.09 INSTALLATIONS AND SERVICES

The vendor shall ensure that all tires, and options, installed by a manufacturer or a manufacturer authorized service center are installed according to the manufacturer's specifications and guidelines.

Vendor is required to disclose make and model of product being offered, and the location, make, and model must be approved by the purchaser prior to installation. Vendor must also disclose the warranty of any item that is less than or exceeds factory warranty coverage.

The FSA may at any time during the contract period request proof that installations and service work is completed in accordance with manufacturer specifications and guidelines. Any vendor that violates this provision will be considered in default of the contract. FSA may terminate the contract in accordance with Section 1.43.

Purchaser Installations & Services:

Purchasers may elect to purchase and install tires under this contract. In such instances, the purchaser agrees to a release of liability and hold harmless for the vendor and the FSA for installations performed by purchasers. This release shall not apply to defects or failures with respect to the tires and optional goods themselves, or to workmanship with respect to the manufacture of such tires or optional goods but shall instead encompass only defects or failures arising from the installation of such tires and optional goods.

3.10 NON-SCHEDULED OPTIONS

A non-scheduled option is an option not listed on the FSA CPP published award. Vendors may provide non-scheduled options at less than MSRP or the Published List Price. Non-scheduled options should be identified and listed as a separate line item with the price and discount on the purchase order. Non-scheduled options are covered under these Terms and Conditions.

3.11 FORCE MAJEURE

A Vendor shall not be penalized for a delay resulting from the Vendor's failure to comply with delivery requirements if neither the fault nor the negligence of the Vendor or its employees contributed to the delay and the delay is due directly to acts of God, wars, acts of public enemies, strikes, fires, floods, or other similar causes wholly beyond the Vendor's control, or for any of the foregoing that third party suppliers if no alternate source of supply is available to the Vendor.

3.12 DELIVERY

Vendors or manufacturer authorized service center shall specify the estimated delivery time in calendar days for each item. The purchaser should consult the Vendor regarding production schedules. Delivery shall be within the normal working hours of the user, Monday through Friday, excluding holidays.

Bulk deliveries of tires shall be completed within thirty (30) calendar days after receipt of an order, unless the Vendor and purchaser negotiate a different delivery schedule in writing.

3.13 PURCHASE ORDERS

To initiate a purchase, a purchase order must be issued to the Vendor, which includes:

- FSA CPP contract title and number;
- FSA CPP item number;
- Make and model or item description; and
- Purchaser name, phone number and email address.

The Vendor's acceptance of a purchaser's order will indicate that the Vendor agrees to deliver an awarded item that will be fully compatible with all of its options. Production schedules and delivery dates should be discussed at the time the quote is provided to the purchaser, or if no quote is provided, when the purchase order is delivered to the Vendor. Vendor shall place the order with the manufacturer within ten (10) business days of receipt of the purchase order. The Vendor shall assure that all orders are placed in full compliance with the specifications and the terms and conditions of the contract and the purchase order. Any changes that are required to bring an item into compliance with the various options due to an incorrect order will be accomplished at the Vendor's expense.

A Confirmation of Order form shall be completed by the Vendor and provided to the purchaser fifteen (15) calendar days from receipt of purchase order without request by the purchaser. Any additional information needed to complete this form should be obtained by the Vendor from the purchaser.

While it is recommended that an agency purchase from the zone which is closest to their location, it is not mandatory to do so. If the purchaser determines that a Vendor in another zone can better serve their needs, the purchaser may order from a Vendor in another zone. Vendors that provide awarded items outside of an awarded zone may upon mutual agreement between the Vendor and the purchaser charge a delivery fee.

If a Vendor receives a purchase order for an item for which they were not awarded, the Vendor must notify the purchaser and return the purchase order to the purchaser within three (3) business days.

3.14 DELIVERY AND SHIPPING

In cases where tires must be shipped to the purchaser, the Vendor or manufacturer authorized service center shall specify any delivery or shipping costs as a separate line item in a bid quote to purchasers prior to any order being placed.

3.15 INSPECTION AND ACCEPTANCE

Final acceptance shall be given only after the purchaser inspects or confirms the item meets contract specifications. Delivery of an item to a purchaser does not constitute acceptance for the purpose of payment. Inspection and acceptance will be at the purchaser's destination unless otherwise previously agreed upon location was provided in the purchase order. Should the delivered items differ in any respect from the FSA Base Specifications, payment can be withheld until such time as the Vendor completes the necessary corrective action.

Each purchaser shall make a good faith effort to inspect the vehicle tires, including any optional goods or services, before or at the time of delivery for acceptance, but in any event no longer than 14 calendar days after delivery.

3.16 DISPOSAL AND OTHER FEES

The purchaser may retain used tires for recycling purposes. On bulk tire deliveries to a purchaser's facility, the Vendor or manufacturer's authorized service center may pick up and dispose of an equal number of replaced used tires. This pickup of used tires may be required at a later date by the purchaser. All used tires must be disposed of in accordance with all Federal, State and local requirements.

Disposal or other fees imposed by the State, Federal or local governments and in effect shall be listed separately on the quote to the purchaser. For Specifications 1-8, the Waste Fee is included in the base price.

3.17 INVOICING AND PAYMENTS

Invoicing and payments shall be the responsibility of the Vendor and purchaser placing orders using this contract. Vendors must invoice each purchaser independently. The Vendor shall be paid upon submission of invoices to the purchaser after satisfactory delivery and acceptance of the items. While the Local Government Prompt Payment Act applies to ensure timely payment of Vendor invoices, the FSA CPP encourages purchasers to make payment within thirty (30) days of acceptance of the item. The Local Government Prompt Payment Act is defined in Sections 218.70–218.79 of Florida Statutes.

3.18 WARRANTY REPAIRS AND SERVICE

All warranties shall begin at the time of delivery and final acceptance by the purchaser. The purchaser's warranty should not be active for incomplete items and items delivered to a third-party supplier before final delivery.

Tires are subject only to the Vendor's standard limited warranty and its warranty policies in effect at the time of purchase. The standard limited warranty is incorporated by reference into the terms and conditions.

3.19 QUARTERLY REPORTS

Quarterly reports are the contractual responsibility of each Vendor. Quarterly reports must be completed and submitted electronically. Quarterly reports which do not adhere to the required format or are not complete of all purchase orders received and/or deliveries made during the quarter will be returned to the reporting Vendor for correction.

Information in the Quarterly Report shall include:

- Quantity sold by item group
- Total dollar value of quarterly sales

Quarterly reports are to be filled out on the website at https://flsheriff.wpenginepowered.com/purchasingprogram/. Quarterly reports are due no later than the 30th day of the month following the end of the quarter. Quarterly reports shall follow the schedule below for the duration of the contract. If a contract extension is executed, the quarterly reports will maintain the same schedule for future reporting periods.

Contract Year 1: April 1, 2025 – March 31, 2026

Year 1 Quarter 1:	April 1 – June 30	Q1 Report Due:	July 30
Year 1 Quarter 2:	July 1 – September 30	Q2 Report Due:	October 30
Year 1 Quarter 3:	October 1 – December 31	Q3 Report Due:	January 30
Year 1 Quarter 4:	January 1 – March 31	Q4 Report Due:	April 30

Contract Year 2: April 1, 2026 – March 31, 2027

Year 2 Quarter 1:	April 1 – June 30	Q1 Report Due:	July 30
Year 2 Quarter 2:	July 1 – September 30	Q2 Report Due:	October 30
Year 2 Quarter 3:	October 1 – December 31	Q3 Report Due:	January 30
Year 2 Quarter 4:	January 1 – March 31	Q4 Report Due:	April 30

Quarterly reports must be submitted even if there are no sales or no deliveries in a quarter. If a Vendor has no sales within a quarter, the Vendor shall indicate “No sales this quarter” on the reporting template.

FSA CPP reserves the right to modify the procedure for submitting quarterly reports during the term of the contract. Such a change shall not materially modify the substance of the information to be reported but may change the method by which future quarterly reports are to be submitted. In the event of such a change, FSA CPP will provide written notice to all Vendors of the method by which future quarterly reports are to be submitted.

3.20 ADMINISTRATIVE FEE

The FSA CPP charges three quarters of one percent (.0075) to procure, process and administer the contract. The administrative fees are the contractual responsibility of each awarded Vendor.

After receipt of payment from contract purchases, the Vendor shall remit all administrative fees to the FSA CPP no later than fifteen (15) calendar days after the end of each quarter. All fees payable to the FSA CPP during any given quarter will be accompanied and supported by a quarterly report.

The administrative fee will remain payable to FSA CPP and no relief from payment of the administrative fee, nor any additional charge to recoup the administrative fee, will be permitted if a Vendor fails to incorporate the administrative fee in its bid pricing. The administrative fee should never be listed as a separate line item on any purchase order or invoice.

The administrative fee is based on the total purchase order amount of new items. This fee excludes any value given to purchasers for trade-ins. Trade-ins, extended warranties and other exchanges will not reduce or impact the fee calculation.

The ACH form for electronic payment or wiring of funds is included in Appendix B. It is the preference of FSA CPP that all payments be electronically paid and submitted. If ACH is not available, checks for the administrative fee can be sent to:

Florida Sheriffs Association
Cooperative Purchasing Program
2617 Mahan Drive

3.21 LIQUIDATED DAMAGES

The Vendor warrants that the item supplied to the purchaser shall conform in all respects to the standards set forth and the failure to comply with this condition will be considered as a breach of contract. Any liquidated damages levied because of inadequacies or failures to comply with these requirements shall be borne solely by the Vendor responsible for same.

Failure to submit the administrative fee with accompanying quarterly reports to FSA CPP within fifteen (15) calendar days following the end of each quarter may result in the imposition of liquidated damages. Vendors failing to submit administrative fees and/or quarterly reports will incur liquidated damages in the amount of $25 for each calendar day that fees and reports are past due, beginning on the 16th day following the end of the quarter.

If a civil action is initiated by the FSA to recover administrative fees or liquidated damages as set forth in this section, the prevailing party shall be entitled to its reasonable attorneys' fees and costs incurred in the litigation. The venue shall lie in the Circuit Court for the Second Judicial Circuit in and for Leon County, Florida.

When quarterly reports are late, liquidated damages are to be included in Vendor's Quarterly Report and administrative fee submission. Liquidated damages that remain unpaid beyond forty-five (45) calendar days can result in FSA CPP, at its sole discretion, implementing contract compliance actions, including but not limited to, suspension, limited participation by specifications or zones, disqualification from future solicitations, or termination for cause pursuant to the Terms & Conditions.

Schedule of Liquidated Damages

Failure to submit quarterly report on time	$25 per calendar day
Failure to submit administrative fee on time	$25 per calendar day
Failure to Report Sales	.0075 of the sales price plus 1.5% each month following the delivery date.

Vendor agrees and acknowledges that its failure to take any of the actions specified in the above schedule will result in liquidated damages to this contract. Vendor agrees and acknowledges that these liquidated damages are not intended to be and do not constitute a penalty and that these amounts are reasonably calculated to compensate the FSA for the damages that it will incur as a result of the Vendor's failure to take the specified actions.

Appendix A: Bid Calendar

FSA25-TRS27.0: Tires Bid Calendar	Date
Invitation to Bid Published	9/26/2024 & 10/16/24
Voluntary Interested Bidder Workshop FSA25-TRS27.0	12/2/2024
New Items & Specifications Submissions Due	12/6/2024
Mandatory Pre-Bid Meeting FSA25-TRS27.0	12/12/2024
Requests for Clarifications Due to FSA	12/23/2024
FSA Response to Requests for Clarifications	1/8/2025
Bid System Opens	1/15/2025
Cone of Silence	1/15/2025 - 2/18/2025
Bid Submissions Due	2/5/2025
Bid Tabulations Posted	2/6/2025
Public Bid Opening	2/6/2025
Bid Evaluations	2/10/25 - 2/13/25
Intent To Award	2/18/2025
Final Award	4/1/2025

Appendix B: ACH Payment Form

PROTECTING, LEADING & UNITING SINCE 1893
FLORIDA SHERIFFS ASSOCIATION
2617 Mahan Drive
Tallahassee, Florida 32308
p: (850) 877-2165 f: (850) 878-8665
flsheriffs.org

TO: All Customers of the Florida Sheriffs Association

SUBJECT: Florida Sheriffs Association is going paperless!

Our association is pleased to announce the implementation of accepting electronic payments from customers. If your agency or company is able to pay via ACH, please consider adding the Florida Sheriffs Association to your list of vendors paid via electronic payment.

Florida Sheriffs Association's Banking Information is as follows:

Checking Account
Capital City Bank
Routing Number: 063100688
Account Number: 0010867001

Please email any payment remittance information to accounting@flsheriffs.org.

If you choose to make ACH payments to the association, there is no additional charge. However, the information above can be used to pay with a wire transfer. If you choose to pay via wire, there is a charge of $25 per wire that you will need to add to your payment.

If you have any questions at all, please contact Trish Eldridge at teldridge@flsheriffs.org. or call (850) 559-5668.

Sincerely,

Trish Eldridge

Director of Accounting and Finance
Florida Sheriffs Association

Appendix C: Insurance Checklist

PROTECTING, LEADING & UNITING SINCE 1893
FLORIDA SHERIFFS ASSOCIATION
2617 Mahan Drive
Tallahassee, Florida 32308
p: (850) 877-2165 f: (850) 878-8665
flsheriffs.org

FSA25-TRS27.0: Tires
Insurance Checklist

The Insurance Checklist outlines the Bidder's insurance coverage obligations, if awarded. Complete insurance requirements are in the terms and conditions.

1. Comprehensive General Liability
   - Minimum limits of $1,000,000 per occurrence to include:
     - Bodily Injury
     - Property Damage
     - Contractual Liability
   - General Aggregate
     - Minimum limit of $2,000,000
2. Automobile Liability
   - Minimum limit of $1,000,000 per occurrence to include:
     - Owned, non-owned, hired, scheduled automobiles
3. The Florida Sheriffs Association (FSA) must be listed as an Additional Insured
4. The certificate must include the FSA bid number and bid title.

Bidder understands the insurance requirements of the contract terms and conditions, and that if awarded evidence of insurance is required five (5) business days prior to the contract award date.

Memorandum

Date: December 9, 2025
To: Mayor and Board of Commissioners
Through: Janina Lewis, Procurement Services Director
From: Patricia Hall, Senior Procurement Analyst
Subject: Award Renewal of File No. 220131-C-JL, Automotive Parts and Supplies **(Chris Cotta Public Works Director, Jake Schaff Fleet Manager, Janina Lewis Procurement Services Director)**

Recommendation

Award Renewal of File No. 220131-C-JL, Automotive Parts and Supplies, utilizing Omnia Partners Contract No. R211201, to AutoZone Stores, LLC in an estimated amount of $35,000.00 for the period of January 1, 2026 through December 31, 2026 for the Public Works Department – Fleet Maintenance Division.

Background

On January 1, 2022, Omnia Partners awarded contract No. R211201 for Automotive Parts and Supplies to AutoZone, effective through December 31, 2024, administratively approved on May 12, 2022. On July 11, 2024, Omnia Partners renewed the contract through December 31, 2025. The BOC approved renewal of this contract on December 17, 2024. On July 8, 2025, the contract was further renewed through December 31, 2026. Omnia Partners is a competitively bid cooperative effort serving state and local governments throughout the country.

The purpose of this contract is to provide OEM and aftermarket parts for City vehicles. With AutoZone's close proximity, they are able to get us parts within minutes, providing less downtime for our vehicles (see attached memo).

Funding

Funding will be identified as orders are placed.

Strategic Plan Objective

N/A

City of Tarpon Springs, Florida

Public Works Dept.
325 E. Pine Street
Tarpon Springs, FL 34689
(727) 942-5606

To: Janina Lewis, Procurement Services Director

Through: Chris Cotta, Public Works Director Chris Cotta

From: Jake Schaff, Fleet Manager Jake Schaff

Date: December 1, 2025

Re: Renew File No. 220131-C-JL

Recommendation:
Renew File No. 220131-C-JL for AutoZone utilizing Omnia Partners Contract No. R211201 for the purchase of vehicle replacement parts in an estimated annual amount of $35,000 for the period of January 1, 2026 through December 31, 2026.

Background:

AutoZone is used to gain OEM and aftermarket parts for City vehicles. This vender is key in keeping our vehicles on the road, running in safe condition. Due to AutoZone's location, they are able to get us parts within minutes providing less downtime for our vehicles.

Funding:

Funding will be determined as needed.

Docusign Envelope ID: 9A569B21-8587-4F86-87E7-C265C0F2A9BE

REGION 4
EDUCATION SERVICE CENTER

July 8, 2025

Mr. Shant Aslan
National Accounts Manager
shant.aslan@autozone.com
AutoZone Parts, Inc.
123 S. Front St.
Memphis, TN 38103

Re: Renewal Award of Contract #R211201

Dear Mr. Aslan:

Per official action taken by the Board of Directors of Region 4 Education Service Center on June 24, 2025, Region 4 ESC is pleased to announce that AutoZone Parts, Inc. has been awarded an annual contract renewal for the following, based on the sealed proposal submitted to Region 4 on August 31, 2021, and subsequent performance thereafter:

Contract

Automotive Parts and Supplies

The contract will expire on December 31, 2026, completing the fifth year of a five-year term contract. The contract is available through OMNIA Partners, Public Sector. Your designated OMNIA Partners, Public Sector contact is Jill Schmitz, at (314) 501-1484 or jill.schmitz@omniapartners.com.

The partnership between AutoZone Parts, Inc., Region 4 and OMNIA Partners, Public Sector can be of great help to participating agencies. Please provide copies of this letter to your sales representative(s) to assist in their daily course of business.

Sincerely,

Signed by:
Adam Tabor
A5A9F62707BB46B...

Adam Tabor, MBA, RTSBA
Director, Procurement

DS

CITY OF TARPON SPRINGS, FL
Procurement Services

324 East Pine Street
P.O. Box 5004
Tarpon Springs, Florida 34688-5004
(727) 942-5615
Fax (727) 937-1766

MEMORANDUM

TO: Honorable Mayor and Board of Commissioners

THRU: Janina Lewis, CPPO, CPP-NIGP, Procurement Services Director

FROM: Patty Hall, CPPB, Senior Procurement Analyst

DATE: 12/17/2024

SUBJECT: Award Renewal of File No. 220131-C-JL, Automotive Parts and Supplies Utilizing Omnia Partners Contract No. R211201

RECOMMENDATION:

Award Renewal of File No. 220131-C-JL, Automotive Parts and Supplies, utilizing Omnia Partners Contract No. R211201, to AutoZone Stores, LLC in an estimated amount of $35,000.00 through December 31, 2025 for the Public Works Department – Fleet Maintenance Division.

BACKGROUND:

On January 1, 2022, Omnia Partners awarded contract No. R211201 for Automotive Parts and Supplies to AutoZone, effective through December 31, 2024. On July 11, 2024, Omnia Partners renewed the contract through December 31, 2025. Omnia Partners is a competitively bid cooperative effort serving state and local governments throughout the country.

The purpose of this contract is to provide OEM and aftermarket parts for City vehicles. With AutoZone's close proximity, they are able to get us parts within minutes, providing less downtime for our vehicles (see memo).

FUNDING: Funding will be identified as orders are placed.

Accepted by: _____ Attest: _____
City Manager City Clerk

City of Tarpon Springs, Florida

Public Works Dept.
325 E. Pine Street
Tarpon Springs, FL 34689
(727) 942-5606

To: Janina Lewis, Procurement Director

Through: Tom Funcheon, Public Works Director

From: Derrick Harris, Fleet Operations Coordinator

Date: December 11, 2024

Re: File No. 220131-C-JL AutoZone Renewal

Recommend:

Renew File No. 220131-C-JL for automotive parts and supplies with AutoZone in the estimated amount of $35,000.00 for the period of January 1, 2025, through December 31, 2025.

Background:

AutoZone is used to gain OEM and aftermarket parts for City vehicles. This vender is key in keeping our vehicles on the road running in safe condition. Due to AutoZone's location, they are able to get us parts within minutes providing less downtime for our vehicles.

Docusign Envelope ID: A3494E4B-5990-4455-BD3B-8C3C0EE44B7E

REGION 4
EDUCATION SERVICE CENTER

July 11, 2024

Mr. Duane Findley
Vice President, Commercial Support
Mr. Grant McGee
grant.mcgee@autozone.com
SVP, Commercial
AutoZone Parts, Inc.
123 S. Front St.
Memphis, TN 38103

Re: Renewal Award of Contract #R211201

Dear Gentlemen:

Per official action taken by the Board of Directors of Region 4 Education Service Center on June 25, 2024, Region 4 ESC is pleased to announce that AutoZone Parts, Inc. has been awarded an annual contract renewal for the following, based on the sealed proposal submitted to Region 4 on August 31, 2021, and subsequent performance thereafter:

Contract

Automotive Parts and Supplies

The contract will expire on December 31, 2025, completing the fourth year of a five-year term contract. The contract is available through OMNIA Partners, Public Sector. Your designated OMNIA Partners, Public Sector contact is Melissa Tillman, at (208) 955-9023 or Melissa.Tillman@omniapartners.com.

The partnership between AutoZone Parts, Inc., Region 4 and OMNIA Partners, Public Sector can be of great help to participating agencies. Please provide copies of this letter to your sales representative(s) to assist in their daily course of business.

Sincerely,

DocuSigned by:
A5A9F62707BB46B...
Adam Tabor, MBA, RTSBA
Director, Procurement

DS

CITY OF TARPON SPRINGS, FL
Procurement Services

324 East Pine Street
P.O. Box 5004
Tarpon Springs, Florida 34688-5004
(727) 942-5615
Fax (727) 937-1766

MEMORANDUM

TO: Honorable Mayor and Board of Commissioners

THRU: Janina Lewis, CPPO, CPP-NIGP, Procurement Services Director

FROM: Patty Hall, CPPB, Senior Procurement Analyst

DATE: 4/25/2023

SUBJECT: Award Renewal of File No. 220131-C-JL, Automotive Parts and Supplies Utilizing Omnia Partners Contract No. R211201

RECOMMENDATION:

Award Renewal of File No. 220131-C-JL, Automotive Parts and Supplies, utilizing Omnia Partners Contract No. R211201, to AutoZone Stores, LLC in an estimated amount of $35,000.00 for the Public Works Department – Fleet Maintenance Division.

BACKGROUND:

On January 1, 2022, Omnia Partners awarded contract No. R211201for Automotive Parts and Supplies to AutoZone, effective through December 31, 2024. Omnia Partners is a competitively bid cooperative effort serving state and local governments throughout the country.

The purpose of this contract is to provide OEM and aftermarket parts for City vehicles. With AutoZone's close proximity, they are able to get us parts within minutes, providing less downtime for our vehicles (see memo).

FUNDING: Funding will be identified as orders are placed.

Accepted by: _____ City Manager

Attest: _____ City Clerk

City of Tarpon Springs, Florida

Public Works Dept.
325 E. Pine Street
Tarpon Springs, FL 34689
(727) 942-5606

To: Janina Lewis, Procurement Director

Through: Tom Funcheon, Public Works Director

From: Michael Vecchione, Fleet Manager

Date: April 18, 2023

Re: File No. 220131-C-JL AutoZone Renewal

Recommend:

Renew File No. 220131-C-JL for automotive parts and supplies with AutoZone in the estimated amount of $35,000.00 for the period of May 11, 2023 through May 12, 2024.

Background:

AutoZone is used to gain OEM and aftermarket parts for City vehicles. This vender is key in keeping our vehicles on the road running in safe condition. Due to AutoZone's location, they are able to get us parts within minutes providing less downtime for our vehicles.

Region 4 Education Service Center (ESC)

Contract # R211201

for

Automotive Parts and Supplies

with

AutoZone Parts, Inc.

Effective: January 1, 2022



AUTOZONE PRIMARY POINT OF CONTACT:

Shant Aslan – National Business Development Manager
Government.Solutions@autozone.com
310-901-1751

The following documents comprise the executed contract between the Region 4 Education Service Center and AutoZone Parts, Inc. effective January 1, 2022:

I. Vendor Contract and Signature Form
II. Supplier's Response to the RFP, incorporated by reference

APPENDIX A

CONTRACT

This Contract ("Contract") is made as of _____. 202X by and between AutoZone Parts, Inc. ("Contractor") and Region 4 Education Service Center ("Region 4 ESC") for the purchase of Automotive Parts and Supplies("the products and services").

RECITALS

WHEREAS, Region 4 ESC issued Request for Proposals Number R211201 for Automotive Parts and Supplies ("RFP"), to which Contractor provided a response ("Proposal"); and

WHEREAS, Region 4 ESC selected Contractor's Proposal and wishes to engage Contractor in providing the services/materials described in the RFP and Proposal;

WHEREAS, both parties agree and understand the following pages will constitute the Contract between the Contractor and Region 4 ESC, having its principal place of business at 7145 West Tidwell Road, Houston, TX 77092.

WHEREAS, Contractor included, in writing, any required exceptions or deviations from these terms, conditions, and specifications; and it is further understood that, if agreed to by Region 4 ESC, said exceptions or deviations are incorporated into the Contract.

WHEREAS, this Contract consists of the provisions set forth below, including provisions of all attachments referenced herein. In the event of a conflict between the provisions set forth below and those contained in any attachment, the provisions set forth below shall control.

WHEREAS, the Contract will provide that any state and local governmental entities, public and private primary, secondary and higher education entities, non-profit entities, and agencies for the public benefit ("Public Agencies") may purchase products and services at prices indicated in the Contract upon the Public Agency's registration with OMNIA Partners.

1) Term of agreement. The term of the Contract is for a period of three (3) years unless terminated, canceled or extended as otherwise provided herein. Region 4 ESC shall have the right to renew the Contract for two (2) additional one-year periods or portions thereof. Region 4 ESC shall review the Contract prior to the renewal date and notify the Contractor of Region 4 ESC's intent renew the Contract. Contractor may elect not to renew by providing three hundred sixty-five days' (365) notice to Region 4 ESC. Notwithstanding the expiration of the initial term or any subsequent term or all renewal options, Region 4 ESC and Contractor may mutually agree to extend the term of this Agreement. Contractor acknowledges and understands Region 4 ESC is under no obligation whatsoever to extend the term of this Agreement.

2) Scope: Contractor shall perform all duties, responsibilities and obligations, set forth in this agreement, and described in the RFP, incorporated herein by reference as though fully set forth herein.

3) Form of Contract. The form of Contract shall be the RFP, the Offeror's proposal and Best and Final Offer(s).

4) Order of Precedence. In the event of a conflict in the provisions of the Contract as accepted by Region 4 ESC, the following order of precedence shall prevail:

   i. This Contract
   ii. Offeror's Best and Final Offer
   iii. Offeror's proposal
   iv. RFP and any addenda

5) Commencement of Work. The Contractor is cautioned not to commence any billable work or provide any material or service under this Contract until Contractor receives a purchase order for such work or is otherwise directed to do so in writing by Region 4 ESC.

6) Entire Agreement (Parol evidence). The Contract, as specified above, represents the final written expression of agreement. All agreements are contained herein and no other agreements or representations that materially alter it are acceptable.

7) Assignment of Contract. No assignment of Contract may be made without the prior written approval of Region 4 ESC. Contractor is required to notify Region 4 ESC when any material change in operations is made (i.e. bankruptcy, change of ownership, merger, etc.).

8) Novation. If Contractor sells or transfers all assets or the entire portion of the assets used to perform this Contract, a successor in interest must guarantee to perform all obligations under this Contract. Region 4 ESC reserves the right to accept or reject any new party. A change of name agreement will not change the contractual obligations of Contractor.

9) Contract Alterations. No alterations to the terms of this Contract shall be valid or binding unless authorized and signed by Region 4 ESC.

10) Adding Authorized Distributors/Dealers. Contractor is prohibited from authorizing additional distributors or dealers, other than those identified at the time of submitting their proposal, to sell under the Contract without notification and prior written approval from Region 4 ESC. Contractor must notify Region 4 ESC each time it wishes to add an authorized distributor or dealer. Purchase orders and payment can only be made to the Contractor unless otherwise approved by Region 4 ESC. Pricing provided to members by added distributors or dealers must also be less than or equal to the Contractor's pricing.

11) TERMINATION OF CONTRACT

   a) Cancellation for Non-Performance or Contractor Deficiency. Region 4 ESC may terminate the Contract if purchase volume is determined to be low volume in any 12-month period. Region 4 ESC reserves the right to cancel the whole or any part of this Contract due to failure by Contractor to carry out any obligation, term or condition of the contract. Region 4 ESC may issue a written deficiency notice to Contractor for acting or failing to act in any of the following:

      i. Providing material that does not meet the specifications of the Contract;
      ii. Providing work or material was not awarded under the Contract;
      iii. Failing to adequately perform the services set forth in the scope of work and specifications;

iv. Failing to complete required work or furnish required materials within a reasonable amount of time;
v. Failing to make progress in performance of the Contract or giving Region 4 ESC reason to believe Contractor will not or cannot perform the requirements of the Contract; or
vi. Performing work or providing services under the Contract prior to receiving an authorized purchase order.

Upon receipt of a written deficiency notice, Contractor shall have ten (10) days to provide a satisfactory response to Region 4 ESC. Failure to adequately address all issues of concern may result in Contract cancellation. Upon cancellation under this paragraph, all goods, materials, work, documents, data and reports prepared by Contractor under the Contract shall immediately become the property of Region 4 ESC.

b) Termination for Cause. If, for any reason, Contractor fails to fulfill its obligation in a timely manner, or Contractor violates any of the covenants, agreements, or stipulations of this Contract Region 4 ESC reserves the right to terminate the Contract immediately and pursue all other applicable remedies afforded by law. Such termination shall be effective by delivery of notice, to the Contractor, specifying the effective date of termination. In such event, all documents, data, studies, surveys, drawings, maps, models and reports prepared by Contractor will become the property of the Region 4 ESC. If such event does occur, Contractor will be entitled to receive just and equitable compensation for the satisfactory work completed on such documents.

c) Delivery/Service Failures. Failure to deliver goods or services within the time specified, or within a reasonable time period as interpreted by the purchasing agent or failure to make replacements or corrections of rejected articles/services when so requested shall constitute grounds for the Contract to be terminated. In the event Region 4 ESC must purchase in an open market, Contractor agrees to reimburse Region 4 ESC, within a reasonable time period, for all expenses incurred.

d) Force Majeure. If by reason of Force Majeure, either party hereto shall be rendered unable wholly or in part to carry out its obligations under this Agreement then such party shall give notice and full particulars of Force Majeure in writing to the other party within a reasonable time after occurrence of the event or cause relied upon, and the obligation of the party giving such notice, so far as it is affected by such Force Majeure, shall be suspended during the continuance of the inability then claimed, except as hereinafter provided, but for no longer period, and such party shall endeavor to remove or overcome such inability with all reasonable dispatch.

The term Force Majeure as employed herein, shall mean acts of God, strikes, lockouts, or other industrial disturbances, act of public enemy, orders of any kind of government of the United States or the State of Texas or any civil or military authority; insurrections; riots; epidemics; landslides; lighting; earthquake; fires; hurricanes; storms; floods; washouts; droughts; arrests; restraint of government and people; civil disturbances; explosions, breakage or accidents to machinery, pipelines or canals, or other causes not reasonably within the control of the party claiming such inability. It is understood and agreed that the settlement of strikes and lockouts shall be entirely within the discretion of the party having the difficulty, and that the above requirement that any Force Majeure shall be remedied with all reasonable dispatch shall not require the settlement of strikes and lockouts by acceding to the demands of the opposing party or parties when such settlement is unfavorable in the judgment of the party having the difficulty.

e) Standard Cancellation. Region 4 ESC may cancel this Contract in whole or in part by providing written notice. The cancellation will take effect 30 business days after the other party receives the notice of cancellation. After the 30th business day all work will cease following completion of final purchase order.

12) Licenses. Contractor shall maintain in current status all federal, state and local licenses, bonds and permits required for the operation of the business conducted by Contractor. Contractor shall remain fully informed of and in compliance with all ordinances and regulations pertaining to the lawful provision of services under the Contract. Region 4 ESC reserves the right to stop work and/or cancel the Contract if Contractor's license(s) expire, lapse, are suspended or terminated.

13) Survival Clause. All applicable software license agreements, warranties or service agreements that are entered into between Contractor and Region 4 ESC under the terms and conditions of the Contract shall survive the expiration or termination of the Contract. All Purchase Orders issued and accepted by Contractor shall survive expiration or termination of the Contract.

14) Delivery. Conforming product shall be shipped within 7 days of receipt of Purchase Order. If delivery is not or cannot be made within this time period, the Contractor must receive authorization for the delayed delivery. The order may be canceled if the estimated shipping time is not acceptable. All deliveries shall be freight prepaid, F.O.B. Destination and shall be included in all pricing offered unless otherwise clearly stated in writing.

15) Inspection & Acceptance. If defective or incorrect material is delivered, Region 4 ESC may make the determination to return the material to the Contractor at no cost to Region 4 ESC. The Contractor agrees to pay all shipping costs for the return shipment. Contractor shall be responsible for arranging the return of the defective or incorrect material.

16) Payments. Payment shall be made after satisfactory performance, in accordance with all provisions thereof, and upon receipt of a properly completed invoice.

17) Price Adjustments. Should it become necessary or proper during the term of this Contract to make any change in design or any alterations that will increase price, Region 4 ESC must be notified immediately. Price increases must be approved by Region 4 ESC and no payment for additional materials or services, beyond the amount stipulated in the Contract shall be paid without prior approval. All price increases must be supported by manufacturer documentation, or a formal cost justification letter. Contractor must honor previous prices for thirty (30) days after approval and written notification from Region 4 ESC. It is the Contractor's responsibility to keep all pricing up to date and on file with Region 4 ESC. All price changes must be provided to Region 4 ESC, using the same format as was provided and accepted in the Contractor's proposal.

    Price reductions may be offered at any time during Contract. Special, time-limited reductions are permissible under the following conditions: 1) reduction is available to all users equally; 2) reduction is for a specific period, normally not less than thirty (30) days; and 3) original price is not exceeded after the time-limit. Contractor shall offer Region 4 ESC any published price reduction during the Contract term.

18) Audit Rights. Contractor shall, at its sole expense, maintain appropriate due diligence of all purchases made by Region 4 ESC and any entity that utilizes this Contract. Region 4 ESC reserves the right to audit the accounting for a period of three (3) years from the time such purchases are made. This audit right shall survive termination of this Agreement for a period of one (1) year from the effective date of termination. Region 4 ESC shall have the authority to conduct random audits of Contractor's pricing at Region 4 ESC's sole cost and expense. Notwithstanding the foregoing, in the event that Region 4 ESC is made aware of any pricing

being offered that is materially inconsistent with the pricing under this agreement, Region 4 ESC shall have the ability to conduct an extensive audit of Contractor's pricing at Contractor's sole cost and expense. Region 4 ESC may conduct the audit internally or may engage a third-party auditing firm. In the event of an audit, the requested materials shall be provided in the format and at the location designated by Region 4 ESC.

19) Discontinued Products. If a product or model is discontinued by the manufacturer, Contractor may substitute a new product or model if the replacement product meets or exceeds the specifications and performance of the discontinued model and if the discount is the same or greater than the discontinued model.

20) New Products/Services. New products and/or services that meet the scope of work may be added to the Contract. Pricing shall be equivalent to the percentage discount for other products. Contractor may replace or add product lines if the line is replacing or supplementing products, is equal or superior to the original products, is discounted similarly or greater than the original discount, and if the products meet the requirements of the Contract. No products and/or services may be added to avoid competitive procurement requirements. Region 4 ESC may require additions to be submitted with documentation from Members demonstrating an interest in, or a potential requirement for, the new product or service. Region 4 ESC may reject any additions without cause.

21) Options. Optional equipment for products under Contract may be added to the Contract at the time they become available under the following conditions: 1) the option is priced at a discount similar to other options; 2) the option is an enhancement to the unit that improves performance or reliability.

22) Warranty Conditions. All supplies, equipment and services shall include manufacturer's minimum standard warranty and one (1) year labor warranty unless otherwise agreed to in writing.

23) Site Cleanup. Contractor shall clean up and remove all debris and rubbish resulting from their work as required or directed. Upon completion of the work, the premises shall be left in good repair and an orderly, neat, clean, safe and unobstructed condition.

24) Site Preparation. Contractor shall not begin a project for which the site has not been prepared, unless Contractor does the preparation work at no cost, or until Region 4 ESC includes the cost of site preparation in a purchase order. Site preparation includes, but is not limited to: moving furniture, installing wiring for networks or power, and similar pre-installation requirements.

25) Registered Sex Offender Restrictions. For work to be performed at schools, Contractor agrees no employee or employee of a subcontractor who has been adjudicated to be a registered sex offender will perform work at any time when students are or are reasonably expected to be present. Contractor agrees a violation of this condition shall be considered a material breach and may result in the cancellation of the purchase order at Region 4 ESC's discretion. Contractor must identify any additional costs associated with compliance of this term. If no costs are specified, compliance with this term will be provided at no additional charge.

26) Safety measures. Contractor shall take all reasonable precautions for the safety of employees on the worksite and shall erect and properly maintain all necessary safeguards for protection of workers and the public. Contractor shall post warning signs against all hazards created by

its operation and work in progress. Proper precautions shall be taken pursuant to state law and standard practices to protect workers, general public and existing structures from injury or damage.

27) Smoking. Persons working under the Contract shall adhere to local smoking policies. Smoking will only be permitted in posted areas or off premises.

28) Stored materials. Upon prior written agreement between the Contractor and Region 4 ESC, payment may be made for materials not incorporated in the work but delivered and suitably stored at the site or some other location, for installation at a later date. An inventory of the stored materials must be provided to Region 4 ESC prior to payment. Such materials must be stored and protected in a secure location and be insured for their full value by the Contractor against loss and damage. Contractor agrees to provide proof of coverage and additionally insured upon request. Additionally, if stored offsite, the materials must also be clearly identified as property of Region 4 ESC and be separated from other materials. Region 4 ESC must be allowed reasonable opportunity to inspect and take inventory of stored materials, on or offsite, as necessary. Until final acceptance by Region 4 ESC, it shall be the Contractor's responsibility to protect all materials and equipment. Contractor warrants and guarantees that title for all work, materials and equipment shall pass to Region 4 ESC upon final acceptance.

29) Funding Out Clause. A Contract for the acquisition, including lease, of real or personal property is a commitment of Region 4 ESC's current revenue only. Region 4 ESC retains the right to terminate the Contract at the expiration of each budget period during the term of the Contract and is conditioned on a best effort attempt by Region 4 ESC to obtain appropriate funds for payment of the contract.

30) Indemnity. Contractor shall protect, indemnify, and hold harmless both Region 4 ESC and its administrators, employees and agents against all claims, damages, losses and expenses arising out of or resulting from the actions of the Contractor, Contractor employees or subcontractors in the preparation of the solicitation and the later execution of the Contract. Any litigation involving either Region 4 ESC, its administrators and employees and agents will be in Harris County, Texas.

31) Marketing. Contractor agrees to allow Region 4 ESC to use their name and logo within website, marketing materials and advertisement. Any use of Region 4 ESC name and logo or any form of publicity, inclusive of press releases, regarding this Contract by Contractor must have prior approval from Region 4 ESC.

32) Certificates of Insurance. Certificates of insurance shall be delivered to the Region 4 ESC prior to commencement of work. The Contractor shall give Region 4 ESC a minimum of ten (10) days' notice prior to any modifications or cancellation of policies. The Contractor shall require all subcontractors performing any work to maintain coverage as specified.

33) Legal Obligations. It is Contractor's responsibility to be aware of and comply with all local, state, and federal laws governing the sale of products/services and shall comply with all laws while fulfilling the Contract. Applicable laws and regulation must be followed even if not specifically identified herein.

OFFER AND CONTRACT SIGNATURE FORM

The undersigned hereby offers and, if awarded, agrees to furnish goods and/or services in strict compliance with the terms, specifications and conditions at the prices proposed within response unless noted in writing.

Company Name	AutoZone Parts, Inc.
Address	123 S. Front St.
City/State/Zip	Memphis, TN 38103
Telephone No.	901.495.6500
Email Address	N/A
Printed Name	Duane Findley / Grant McGee
Title	Vice President, Commercial Suppor / SVP, Commercial
Authorized signature	DocuSigned by: 85DAA9E571B8431... / DocuSigned by: E800417ADBE0447...

Accepted by Region 4 ESC:

Contract No. R211201

Initial Contract Term 01/01/2022 to 12/31/2024

Margaret L. Bass — 10/26/2021

Region 4 ESC Authorized Board Member — Date

Margaret S. Bass

Print Name

Linda F. Tinnerman — 10/26/2021

Region 4 ESC Authorized Board Member — Date

Linda F. Tinnerman

Print Name

Appendix B

TERMS & CONDITIONS ACCEPTANCE FORM

Signature on the Offer and Contract Signature form certifies complete acceptance of the terms and conditions in this solicitation and draft Contract except as noted below with proposed substitute language (additional pages may be attached, if necessary). The provisions of the RFP cannot be modified without the express written approval of Region 4 ESC. If a proposal is returned with modifications to the draft Contract provisions that are not expressly approved in writing by Region 4 ESC, the Contract provisions contained in the RFP shall prevail.

Check one of the following responses:

☐ Offeror takes no exceptions to the terms and conditions of the RFP and draft Contract.

(Note: If none are listed below, it is understood that no exceptions/deviations are taken.)

☑ Offeror takes the following exceptions to the RFP and draft Contract. All exceptions must be clearly explained, reference the corresponding term to which Offeror is taking exception and clearly state any proposed modified language, proposed additional terms to the RFP and draft Contract must be included:

(Note: Unacceptable exceptions may remove Offeror's proposal from consideration for award. Region 4 ESC shall be the sole judge on the acceptance of exceptions and modifications and the decision shall be final.

If an offer is made with modifications to the contract provisions that are not expressly approved in writing, the contract provisions contained in the RFP shall prevail.)

See10/15/2021 Approved language for Appendix B Exceptions: Section 11, 30, and 17.

Section/Page	Term, Condition, or Specification	Exception/Proposed Modification	Accepted (For Region 4 ESC's use)
Section 11 (e). Standard Cancellation/ pg.Contract 3	Please modify this section by including these additional words at the very beginning of the first sentence so to allow AutoZone the opportunity to correct any issue before you terminate the contract.	In the event Contractor cannot remedy an issue arising from this Contract within 30 business days after receiving written notice of such issue from Region 4 ESC, Region 4 ESC may cancel this Contract in whole or in part by then providing written notice of cancellation to Contractor which shall take effect 30 business days after Contractor receives such notice. After the 30th business day all work will cease following completion of any then current purchase from	
Section 30. Indemnity/ pg. Contract 6	Please insert the following as an additional sentence at the end of the indemnity section to cover indemnity for things AutoZone is not a part of	Region 4 ESC agrees to be responsible for and shall indemnify and hold Contractor harmless from and against all damages, claims or demands to the extent arising out of or resulting from (i) improper installation of goods by Region 4 ESC, or (ii) any breach of an express product warranty issued by Region 4 ESC to a customer or end user of any of the goods that exceed either the scope of the manufacturers' express warranties or such other warranties set forth herein or agreed to by Contractor in writing.	
Section 17. Price Adjustments/ pg. Contract 4	Please modify the first paragraph by adding these 3 words here (material, Such, such) in order to make it more clear that only price increases that are the result of product design alterations are covered by this section.	Should it become necessary or proper during the term of this Contract to make any change in design or any alterations that will materially increase price, Region 4 ESC must be notified immediately. Such Price increases must be approved by Region 4 ESC and no payment for additional materials or services, beyond the amount stipulated in the Contract shall be paid without prior approval. All such price increases must be supported by manufacturer documentation, or a formal cost justification letter. Contractor must honor previous prices for thirty (30) days after approval and written notification from Region 4 ESC. It is the Contractor's responsibility to keep all pricing up to date and on file with Region 4 ESC. All price changes must be provided to Region 4 ESC, using the same format as was provided and accepted in the Contractor's proposal.	

10/15/2021 Approved language for Appendix B Exceptions

Section 11:

Answer: Region 4 cannot accept the Section 11 response language. Region 4 can accept the current AutoZone/Region 4 agreement language.

Section 11 (e). Standard Cancellation/ pg.Contract 3	**Please modify this section by including these additional words at the very beginning of the first sentence so to allow AutoZone the opportunity to correct any issue before you terminate the contract.**	**In the event Contractor cannot remedy an issue arising from this Contract within 30 business days after receiving written notice of such issue from Region 4 ESC, Region 4 ESC may cancel this Contract in whole or in part by then providing written notice of cancellation to Contractor which shall take effect 30 business days after Contractor receives such notice. After the 30th business day all work will cease following completion of any then current purchase order.**

Region 4 RFP Language:

e) Standard Cancellation. Region 4 ESC may cancel this Contract in whole or in part by providing written notice. The cancellation will take effect 30 business days after the other party receives the notice of cancellation. After the 30th business day all work will cease following completion of final purchase order.

Section 11 Answer: Agreed to current AutoZone/Region 4 language 5.5 Standard Cancellation with additional language (approved Jason Bess – AutoZone 9/30/2021:

5.5 **Standard Cancellation**: Region 4 ESC may cancel this contract in whole or in part by providing written notice. The cancellation will take effect 30 business days after the other party receives the notice of cancellation. After the 30th business day all work will cease following completion of final purchase order. Vendor may be requested to provide additional items not already on contract at any time. AutoZone reserves the right to decline non-contract item requests

Section 30:

Answer: Region 4 cannot accept the AutoZone response language for Section 30. Region 4 can accept the current AutoZone/Region 4 contract language minus the reference to TCPN.

AutoZone:

Section 30. Indemnity/ pg. Contract 8	Please insert the following as an additional sentence at the end of the indemnity section to cover indemnity for things AutoZone is not a part of:	Region 4 ESC agrees to be responsible for and shall indemnify and hold Contractor harmless from and against all damages, claims or demands to the extent arising out of or resulting from (i) improper installation of goods by Region 4 ESC, or (ii) any breach of an express product warranty issued by Region 4 ESC to a customer or end user of any of the goods that exceed either the scope of the manufacturers' express warranties or such other warranties set forth herein or agreed to by Contractor in writing.

RFP Region 4

30) Indemnity. Contractor shall protect, indemnify, and hold harmless both Region 4 ESC and its administrators, employees and agents against all claims, damages, losses and expenses arising out of or resulting from the actions of the Contractor, Contractor employees or subcontractors in the preparation of the solicitation and the later execution of the Contract. Any litigation involving either Region 4 ESC, its administrators and employees and agents will be in Harris County, Texas.

Current Autozone/Region 4 agreement language:

6. With regards to your Firm's proposal, Article 13-Miscellaneous, 13.3 Indemnity, your Firm States:

"The awarded vendor shall protect, indemnify and hold harmless both Region 4 ESC and TCPN and its participants, administrators, employees and agents against all claims, damages, losses and expenses to the extent the same arise out of or result from the actions of the vendor, vendor's employees or vendor's subcontractors in the preparation of the solicitation and the later execution of the contract, including any liability of Region 4 ESC and TCPN under supplemental agreements with members. Any litigation involving either Region 4 ESC or TCPN, its administrators and employees and agents will be in Harris County, Texas. Any litigation involving TCPN members shall be in the jurisdiction of the participating agency."

As the lead agency for the solicitation, Region 4 Education Service Center, is located in Texas, any litigation involving Region 4 ESC or TCPN shall occur in Harris County, Texas. The remainder of the language for this section will stand as is with no modification.

Section 30 Answer: Section 30 stays with original RFP 21-12 language. Agreed to Section 22 with additional highlighted statement (approved Jason Bess – AutoZone 10/15/2021:

Answer:

22) **Warranty Conditions. All supplies, equipment and services shall include manufacturer's minimum standard warranty and one (1) year labor warranty unless otherwise agreed to in writing.**

Add statement to #22: "Region 4 ESC and Supplier are not liable for improper installation of good by Public Agency or any breach of warranty issued by a Public Agency that exceeds scope of manufacturer or Supplier's warrant."

Section 17:

Answer: Region 4 cannot accept AutoZone exception to Section 17. Any and all change, update, adjustment, etc. must be approved by Region 4 ECS using the Region 4 format request form.

Autozone:

Section 17. Price Adjustments/ pg. Contract 4	Please modify the first paragraph by adding these 3 words here (material, Such, such) in order to make it more clear that only price increases that are the result of product design alterations are covered by this section.	Should it become necessary or proper during the term of this Contract to make any change in design or any alterations that will materially increase price, Region 4 ESC must be notified immediately. Such Price increases must be approved by Region 4 ESC and no payment for additional materials or services, beyond the amount stipulated in the Contract shall be paid without prior approval. All such price increases must be supported by manufacturer documentation, or a formal cost justification letter. Contractor must honor previous prices for thirty (30) days after approval and written notification from Region 4 ESC. It is the Contractor's responsibility to keep all pricing up to date and on file with Region 4 ESC. All price changes must be provided to Region 4 ESC, using the same format as was provided and accepted in the Contractor's proposal.

Section 17 Answer: Agreed to stay with original language from RFP 21-12 Section 17 Price Adjustment (approved Jason Bess – AutoZone 9/30/2021:

RFP Region 4:

17) Price Adjustments. Should it become necessary or proper during the term of this Contract to make any change in design or any alterations that will increase price, Region 4 ESC must be notified immediately. Price increases must be approved by Region 4 ESC and no payment for additional materials or services, beyond the amount stipulated in the Contract shall be paid without prior approval. All price increases must be supported by manufacturer documentation, or a formal cost justification letter. Contractor must honor previous prices for thirty (30) days after approval and written notification from Region 4 ESC. It is the Contractor's responsibility to keep all pricing up to date and on file with Region 4 ESC. All price changes must be provided to Region 4 ESC, using the same format as was provided and accepted in the Contractor's proposal.

Price reductions may be offered at any time during Contract. Special, time-limited reductions are permissible under the following conditions: 1) reduction is available to all users equally; 2) reduction is for a specific period, normally not less than thirty (30) days; and 3) original price is not exceeded after the time-limit. Contractor shall offer Region 4 ESC any published price reduction during the Contract term.

DocuSign Envelope ID: 5E8D1F7B-7AFC-4E24-97D9-D51210F8650D

APPENDIX A

DRAFT CONTRACT

This Contract ("Contract") is made as of _____, 202X by and between _____ _____ ("Contractor") and Region 4 Education Service Center ("Region 4 ESC") for the purchase of Automotive Parts and Supplies("the products and services").

RECITALS

WHEREAS, Region 4 ESC issued Request for Proposals Number R_____ for _____ ("RFP"), to which Contractor provided a response ("Proposal"); and

WHEREAS, Region 4 ESC selected Contractor's Proposal and wishes to engage Contractor in providing the services/materials described in the RFP and Proposal;

WHEREAS, both parties agree and understand the following pages will constitute the Contract between the Contractor and Region 4 ESC, having its principal place of business at 7145 West Tidwell Road, Houston, TX 77092.

WHEREAS, Contractor included, in writing, any required exceptions or deviations from these terms, conditions, and specifications; and it is further understood that, if agreed to by Region 4 ESC, said exceptions or deviations are incorporated into the Contract.

WHEREAS, this Contract consists of the provisions set forth below, including provisions of all attachments referenced herein. In the event of a conflict between the provisions set forth below and those contained in any attachment, the provisions set forth below shall control.

WHEREAS, the Contract will provide that any state and local governmental entities, public and private primary, secondary and higher education entities, non-profit entities, and agencies for the public benefit ("Public Agencies") may purchase products and services at prices indicated in the Contract upon the Public Agency's registration with OMNIA Partners.

1) Term of agreement. The term of the Contract is for a period of three (3) years unless terminated, canceled or extended as otherwise provided herein. Region 4 ESC shall have the right to renew the Contract for two (2) additional one-year periods or portions thereof. Region 4 ESC shall review the Contract prior to the renewal date and notify the Contractor of Region 4 ESC's intent renew the Contract. Contractor may elect not to renew by providing three hundred sixty-five days' (365) notice to Region 4 ESC. Notwithstanding the expiration of the initial term or any subsequent term or all renewal options, Region 4 ESC and Contractor may mutually agree to extend the term of this Agreement. Contractor acknowledges and understands Region 4 ESC is under no obligation whatsoever to extend the term of this Agreement.

2) Scope: Contractor shall perform all duties, responsibilities and obligations, set forth in this agreement, and described in the RFP, incorporated herein by reference as though fully set forth herein.

3) Form of Contract. The form of Contract shall be the RFP, the Offeror's proposal and Best and Final Offer(s).

4) Order of Precedence. In the event of a conflict in the provisions of the Contract as accepted by Region 4 ESC, the following order of precedence shall prevail:

   i. This Contract
   ii. Offeror's Best and Final Offer
   iii. Offeror's proposal
   iv. RFP and any addenda

5) Commencement of Work. The Contractor is cautioned not to commence any billable work or provide any material or service under this Contract until Contractor receives a purchase order for such work or is otherwise directed to do so in writing by Region 4 ESC.

6) Entire Agreement (Parol evidence). The Contract, as specified above, represents the final written expression of agreement. All agreements are contained herein and no other agreements or representations that materially alter it are acceptable.

7) Assignment of Contract. No assignment of Contract may be made without the prior written approval of Region 4 ESC. Contractor is required to notify Region 4 ESC when any material change in operations is made (i.e. bankruptcy, change of ownership, merger, etc.).

8) Novation. If Contractor sells or transfers all assets or the entire portion of the assets used to perform this Contract, a successor in interest must guarantee to perform all obligations under this Contract. Region 4 ESC reserves the right to accept or reject any new party. A change of name agreement will not change the contractual obligations of Contractor.

9) Contract Alterations. No alterations to the terms of this Contract shall be valid or binding unless authorized and signed by Region 4 ESC.

10) Adding Authorized Distributors/Dealers. Contractor is prohibited from authorizing additional distributors or dealers, other than those identified at the time of submitting their proposal, to sell under the Contract without notification and prior written approval from Region 4 ESC. Contractor must notify Region 4 ESC each time it wishes to add an authorized distributor or dealer. Purchase orders and payment can only be made to the Contractor unless otherwise approved by Region 4 ESC. Pricing provided to members by added distributors or dealers must also be less than or equal to the Contractor's pricing.

11) TERMINATION OF CONTRACT

   a) Cancellation for Non-Performance or Contractor Deficiency. Region 4 ESC may terminate the Contract if purchase volume is determined to be low volume in any 12-month period. Region 4 ESC reserves the right to cancel the whole or any part of this Contract due to failure by Contractor to carry out any obligation, term or condition of the contract. Region 4 ESC may issue a written deficiency notice to Contractor for acting or failing to act in any of the following:

      i. Providing material that does not meet the specifications of the Contract;
      ii. Providing work or material was not awarded under the Contract;
      iii. Failing to adequately perform the services set forth in the scope of work and specifications;

iv. Failing to complete required work or furnish required materials within a reasonable amount of time;
v. Failing to make progress in performance of the Contract or giving Region 4 ESC reason to believe Contractor will not or cannot perform the requirements of the Contract; or
vi. Performing work or providing services under the Contract prior to receiving an authorized purchase order.

Upon receipt of a written deficiency notice, Contractor shall have ten (10) days to provide a satisfactory response to Region 4 ESC. Failure to adequately address all issues of concern may result in Contract cancellation. Upon cancellation under this paragraph, all goods, materials, work, documents, data and reports prepared by Contractor under the Contract shall immediately become the property of Region 4 ESC.

b) Termination for Cause. If, for any reason, Contractor fails to fulfill its obligation in a timely manner, or Contractor violates any of the covenants, agreements, or stipulations of this Contract Region 4 ESC reserves the right to terminate the Contract immediately and pursue all other applicable remedies afforded by law. Such termination shall be effective by delivery of notice, to the Contractor, specifying the effective date of termination. In such event, all documents, data, studies, surveys, drawings, maps, models and reports prepared by Contractor will become the property of the Region 4 ESC. If such event does occur, Contractor will be entitled to receive just and equitable compensation for the satisfactory work completed on such documents.

c) Delivery/Service Failures. Failure to deliver goods or services within the time specified, or within a reasonable time period as interpreted by the purchasing agent or failure to make replacements or corrections of rejected articles/services when so requested shall constitute grounds for the Contract to be terminated. In the event Region 4 ESC must purchase in an open market, Contractor agrees to reimburse Region 4 ESC, within a reasonable time period, for all expenses incurred.

d) Force Majeure. If by reason of Force Majeure, either party hereto shall be rendered unable wholly or in part to carry out its obligations under this Agreement then such party shall give notice and full particulars of Force Majeure in writing to the other party within a reasonable time after occurrence of the event or cause relied upon, and the obligation of the party giving such notice, so far as it is affected by such Force Majeure, shall be suspended during the continuance of the inability then claimed, except as hereinafter provided, but for no longer period, and such party shall endeavor to remove or overcome such inability with all reasonable dispatch.

The term Force Majeure as employed herein, shall mean acts of God, strikes, lockouts, or other industrial disturbances, act of public enemy, orders of any kind of government of the United States or the State of Texas or any civil or military authority; insurrections; riots; epidemics; landslides; lighting; earthquake; fires; hurricanes; storms; floods; washouts; droughts; arrests; restraint of government and people; civil disturbances; explosions, breakage or accidents to machinery, pipelines or canals, or other causes not reasonably within the control of the party claiming such inability. It is understood and agreed that the settlement of strikes and lockouts shall be entirely within the discretion of the party having the difficulty, and that the above requirement that any Force Majeure shall be remedied with all reasonable dispatch shall not require the settlement of strikes and lockouts by acceding to the demands of the opposing party or parties when such settlement is unfavorable in the judgment of the party having the difficulty.

e) Standard Cancellation. Region 4 ESC may cancel this Contract in whole or in part by providing written notice. The cancellation will take effect 30 business days after the other party receives the notice of cancellation. After the 30th business day all work will cease following completion of final purchase order.

12) Licenses. Contractor shall maintain in current status all federal, state and local licenses, bonds and permits required for the operation of the business conducted by Contractor. Contractor shall remain fully informed of and in compliance with all ordinances and regulations pertaining to the lawful provision of services under the Contract. Region 4 ESC reserves the right to stop work and/or cancel the Contract if Contractor's license(s) expire, lapse, are suspended or terminated.

13) Survival Clause. All applicable software license agreements, warranties or service agreements that are entered into between Contractor and Region 4 ESC under the terms and conditions of the Contract shall survive the expiration or termination of the Contract. All Purchase Orders issued and accepted by Contractor shall survive expiration or termination of the Contract.

14) Delivery. Conforming product shall be shipped within 7 days of receipt of Purchase Order. If delivery is not or cannot be made within this time period, the Contractor must receive authorization for the delayed delivery. The order may be canceled if the estimated shipping time is not acceptable. All deliveries shall be freight prepaid, F.O.B. Destination and shall be included in all pricing offered unless otherwise clearly stated in writing.

15) Inspection & Acceptance. If defective or incorrect material is delivered, Region 4 ESC may make the determination to return the material to the Contractor at no cost to Region 4 ESC. The Contractor agrees to pay all shipping costs for the return shipment. Contractor shall be responsible for arranging the return of the defective or incorrect material.

16) Payments. Payment shall be made after satisfactory performance, in accordance with all provisions thereof, and upon receipt of a properly completed invoice.

17) Price Adjustments. Should it become necessary or proper during the term of this Contract to make any change in design or any alterations that will increase price, Region 4 ESC must be notified immediately. Price increases must be approved by Region 4 ESC and no payment for additional materials or services, beyond the amount stipulated in the Contract shall be paid without prior approval. All price increases must be supported by manufacturer documentation, or a formal cost justification letter. Contractor must honor previous prices for thirty (30) days after approval and written notification from Region 4 ESC. It is the Contractor's responsibility to keep all pricing up to date and on file with Region 4 ESC. All price changes must be provided to Region 4 ESC, using the same format as was provided and accepted in the Contractor's proposal.

    Price reductions may be offered at any time during Contract. Special, time-limited reductions are permissible under the following conditions: 1) reduction is available to all users equally; 2) reduction is for a specific period, normally not less than thirty (30) days; and 3) original price is not exceeded after the time-limit. Contractor shall offer Region 4 ESC any published price reduction during the Contract term.

18) Audit Rights. Contractor shall, at its sole expense, maintain appropriate due diligence of all purchases made by Region 4 ESC and any entity that utilizes this Contract. Region 4 ESC reserves the right to audit the accounting for a period of three (3) years from the time such purchases are made. This audit right shall survive termination of this Agreement for a period of one (1) year from the effective date of termination. Region 4 ESC shall have the authority to conduct random audits of Contractor's pricing at Region 4 ESC's sole cost and expense. Notwithstanding the foregoing, in the event that Region 4 ESC is made aware of any pricing

being offered that is materially inconsistent with the pricing under this agreement, Region 4 ESC shall have the ability to conduct an extensive audit of Contractor's pricing at Contractor's sole cost and expense. Region 4 ESC may conduct the audit internally or may engage a third-party auditing firm. In the event of an audit, the requested materials shall be provided in the format and at the location designated by Region 4 ESC.

19) Discontinued Products. If a product or model is discontinued by the manufacturer, Contractor may substitute a new product or model if the replacement product meets or exceeds the specifications and performance of the discontinued model and if the discount is the same or greater than the discontinued model.

20) New Products/Services. New products and/or services that meet the scope of work may be added to the Contract. Pricing shall be equivalent to the percentage discount for other products. Contractor may replace or add product lines if the line is replacing or supplementing products, is equal or superior to the original products, is discounted similarly or greater than the original discount, and if the products meet the requirements of the Contract. No products and/or services may be added to avoid competitive procurement requirements. Region 4 ESC may require additions to be submitted with documentation from Members demonstrating an interest in, or a potential requirement for, the new product or service. Region 4 ESC may reject any additions without cause.

21) Options. Optional equipment for products under Contract may be added to the Contract at the time they become available under the following conditions: 1) the option is priced at a discount similar to other options; 2) the option is an enhancement to the unit that improves performance or reliability.

22) Warranty Conditions. All supplies, equipment and services shall include manufacturer's minimum standard warranty and one (1) year labor warranty unless otherwise agreed to in writing.

23) Site Cleanup. Contractor shall clean up and remove all debris and rubbish resulting from their work as required or directed. Upon completion of the work, the premises shall be left in good repair and an orderly, neat, clean, safe and unobstructed condition.

24) Site Preparation. Contractor shall not begin a project for which the site has not been prepared, unless Contractor does the preparation work at no cost, or until Region 4 ESC includes the cost of site preparation in a purchase order. Site preparation includes, but is not limited to: moving furniture, installing wiring for networks or power, and similar pre-installation requirements.

25) Registered Sex Offender Restrictions. For work to be performed at schools, Contractor agrees no employee or employee of a subcontractor who has been adjudicated to be a registered sex offender will perform work at any time when students are or are reasonably expected to be present. Contractor agrees a violation of this condition shall be considered a material breach and may result in the cancellation of the purchase order at Region 4 ESC's discretion. Contractor must identify any additional costs associated with compliance of this term. If no costs are specified, compliance with this term will be provided at no additional charge.

26) Safety measures. Contractor shall take all reasonable precautions for the safety of employees on the worksite and shall erect and properly maintain all necessary safeguards for protection of workers and the public. Contractor shall post warning signs against all hazards created by

its operation and work in progress. Proper precautions shall be taken pursuant to state law and standard practices to protect workers, general public and existing structures from injury or damage.

27) Smoking. Persons working under the Contract shall adhere to local smoking policies. Smoking will only be permitted in posted areas or off premises.

28) Stored materials. Upon prior written agreement between the Contractor and Region 4 ESC, payment may be made for materials not incorporated in the work but delivered and suitably stored at the site or some other location, for installation at a later date. An inventory of the stored materials must be provided to Region 4 ESC prior to payment. Such materials must be stored and protected in a secure location and be insured for their full value by the Contractor against loss and damage. Contractor agrees to provide proof of coverage and additionally insured upon request. Additionally, if stored offsite, the materials must also be clearly identified as property of Region 4 ESC and be separated from other materials. Region 4 ESC must be allowed reasonable opportunity to inspect and take inventory of stored materials, on or offsite, as necessary. Until final acceptance by Region 4 ESC, it shall be the Contractor's responsibility to protect all materials and equipment. Contractor warrants and guarantees that title for all work, materials and equipment shall pass to Region 4 ESC upon final acceptance.

29) Funding Out Clause. A Contract for the acquisition, including lease, of real or personal property is a commitment of Region 4 ESC's current revenue only. Region 4 ESC retains the right to terminate the Contract at the expiration of each budget period during the term of the Contract and is conditioned on a best effort attempt by Region 4 ESC to obtain appropriate funds for payment of the contract.

30) Indemnity. Contractor shall protect, indemnify, and hold harmless both Region 4 ESC and its administrators, employees and agents against all claims, damages, losses and expenses arising out of or resulting from the actions of the Contractor, Contractor employees or subcontractors in the preparation of the solicitation and the later execution of the Contract. Any litigation involving either Region 4 ESC, its administrators and employees and agents will be in Harris County, Texas.

31) Marketing. Contractor agrees to allow Region 4 ESC to use their name and logo within website, marketing materials and advertisement. Any use of Region 4 ESC name and logo or any form of publicity, inclusive of press releases, regarding this Contract by Contractor must have prior approval from Region 4 ESC.

32) Certificates of Insurance. Certificates of insurance shall be delivered to the Region 4 ESC prior to commencement of work. The Contractor shall give Region 4 ESC a minimum of ten (10) days' notice prior to any modifications or cancellation of policies. The Contractor shall require all subcontractors performing any work to maintain coverage as specified.

33) Legal Obligations. It is Contractor's responsibility to be aware of and comply with all local, state, and federal laws governing the sale of products/services and shall comply with all laws while fulfilling the Contract. Applicable laws and regulation must be followed even if not specifically identified herein.

DocuSign Envelope ID: 5E8D1F7B-7AFC-4E24-97D9-D51210F8650D

OFFER AND CONTRACT SIGNATURE FORM

The undersigned hereby offers and, if awarded, agrees to furnish goods and/or services in strict compliance with the terms, specifications and conditions at the prices proposed within response unless noted in writing.

Company Name	AutoZone Parts, Inc.
Address	123 S. Front St.
City/State/Zip	Memphis, TN 38103
Telephone No.	901.495.6500
Email Address	N/A
Printed Name	Duane Findley / Grant McGee
Title	Vice President, Commercial Support / SVP, Commercial
Authorized signature	DocuSigned by: 08DAA9E671B9431... / DocuSigned by: E800417AD3E9447...

Accepted by Region 4 ESC:

Contract No. _____

Initial Contract Term _____ to _____

_____ _____
Region 4 ESC Authorized Board Member Date

_____
Print Name

_____ _____
Region 4 ESC Authorized Board Member Date

_____
Print Name

Project Administration Department

324 East Pine Street
Tarpon Springs FL 34689
(727) 942-5638

Memorandum

Date: December 9, 2025

To: Mayor, Board of Commissioners, and City Manager

Through: Jeffrey Young, Chief of Police JPY

From: P.J. Harbert, Grant Project Specialist

Subject: Project #M5OT-2026-00201 Institute of Police Technology and Management (IPTM)/Florida Department of Transportation (FDOT) Contract #G3I85

Recommendation
Approval is recommended for the Mayor or his designee per City resolution to execute a contract/subgrant program for Drug Recognition Expert(s) (DRE) with the Institute of Police Technology and Management (IPTM) through the Florida Department of Transportation (FDOT). This grant is in the amount of $3000 for the purpose of funding overtime for Drug Recognition Expert(s) conducting investigations for Driving Under the Influence (DUI) offenses. This is a pass-through subgrant that is funded from the Florida Department of Transportation through the Institute of Police Technology and Management.

Summary
Through the proposed contract/subgrant agreement, the Florida Department of Transportation and Institute of Police Technology and Management have agreed to partner with the City to fund overtime pay for Drug Recognition Experts conducting investigations for Driving Under the Influence offenses. This agreement provides $3000 of funding with no match required.

This agreement will be in effect until 09/20/2026. The most recent DRE contract (2025) expired on 09/30/25.

The agreement document is attached.

The City Attorney has reviewed this document.

Docusign Envelope ID: 2882A6E4-BCEA-4ABD-92D6-9FECFF755E86

Florida Department of Transportation

RON DESANTIS
GOVERNOR

605 Suwannee Street
Tallahassee, FL 32399-0450

JARED W. PERDUE, P.E.
SECRETARY

November 13, 2025

Tim Cornelius
DEC Program Coordinator
Institute of Police Technology and Management
12000 Alumni Drive
Jacksonville, FL 32224

RE: Project Name: Drug Recognition Expert (DRE) Call-Out
Project Number: M5OT-2026-00201
DOT Contract Number: G3I85

Dear Mr. Cornelius:

We have reviewed your request to approve the contract below between the Institute of Police Technology and Management and Tarpon Springs Police Department, to allow reimbursement of the overtime expenses for Drug Recognition Experts conducting investigations for driving under the influence (DUI), as part of the above referenced highway safety subgrant program.

Your request is hereby **approved.** Please include a copy of this approval along with a copy of the executed subcontract when requesting reimbursement.

A copy of this letter and the executed subcontract will become a part of your permanent project file. If you have any questions or need assistance, please contact your Program Manager Lakeisha White at (850) 414-4116 or by email at lakeisha.white@dot.state.fl.us.

Sincerely,

DocuSigned by:
Chris Craig
B67DEADA5D7C4E4...

Chris Craig, CPM, FCCM
Traffic Safety Administrator

CC/lw
Enclosures
cc: Contract File
Financial File

Docusign Envelope ID: 2882A6E4-BCEA-4ABD-92D6-9FECFF755E86

Institute of Police Technology and Management

University of North Florida
12000 Alumni Drive | Jacksonville, Florida 32224
Phone: (904) 620-4786 | Fax: (904) 620-2453
www.iptm.org

November 12, 2025

Mr. Chris Craig
Department of Transportation
605 Suwannee Street, MS 53
Tallahassee, FL 32399

RE: Project # **M5OT-2026-00201**
Contract # **G3I85**
Drug Recognition Expert (DRE) Call-Out

Dear Mr. Craig:

IPTM is requesting contract approval under the above-mentioned sub-grant program. This request will allow us to reimburse overtime expenses for Drug Recognition Experts conducting investigations for driving under the influence.

Please review and approve the attached agreement for reimbursement under this sub-contract. The contractor is City of Tarpon Springs, and amount to be reimbursed will not exceed $3,000.00. This subcontract will replace any pre-existing subcontract with this agency.

If you have any questions, please contact me.

Sincerely,

Tim Cornelius

Tim Cornelius
Florida DEC Program Coordinator

Enclosure

Docusign Envelope ID: 2882A6E4-BCEA-4ABD-92D6-9FECFF755E86

DRUG RECOGNITION EXPERT (DRE) CALL-OUT
OVERTIME REIMBURSEMENT CONTRACT SPECIFICATIONS

Contract Cost
Total not to exceed $3,000.00

Period of Performance
Date of execution to September 30, 2026

Purpose and Scope
To reimburse Florida law enforcement agencies for the overtime costs incurred for the performance and immediate documentation of qualified drug influence evaluations related to possible violations of Florida Statute 316.193, Driving Under the Influence.

Agency Requirements
The agency may be reimbursed for the actual, fully burdened overtime costs incurred for the qualified drug influence evaluations performed on overtime status by certified Drug Recognition Experts (DREs) employed by the agency.

- A qualified drug influence evaluation shall be one that is:
    - Conducted by a certified Drug Recognition Expert (DRE) employed by the agency at the time of the evaluation.
    - Conducted on overtime status.
    - Conducted in compliance with accepted DRE protocols.

For each qualified drug influence evaluation for which overtime reimbursement is requested, the DRE is required to:
- Report the evaluation to the Florida DRE Coordinator by submitting the required information for invoicing via the online platform, the Integrated Program Activity Submission System (iPASS).
- Enter the evaluation into the DRE National DRE Data System (NDDS) or current state data collection platform.

Only overtime costs directly associated with the response to, performance of, and documentation of drug influence evaluations as a result of possible violations of Florida Statute 316.193, Driving Under the Influence, are eligible for reimbursement.

The agency will NOT be reimbursed for unallowable costs, including but not limited to the following:
- Work hours that occurred outside of the contract's period of performance.
- Regular work hours (straight time).
- Work hours for which the agency is reimbursed through other funding sources, including a subgrant with the Florida Department of Transportation (FDOT) or other state or federal funds.
- Work hours of personnel that do not possess an active certification as a Drug Recognition Expert (DRE) at the time of the occurrence.
- Work hours related to depositions, court appearances, or other legal proceedings.
- Work hours related to DRE program administration or training.
- Work hours related to prisoner transport, crash investigations, or other law enforcement activities that are not directly associated with the response to, performance of, and documentation of drug influence evaluations as a result of possible violations of Florida Statute, 316.193, Driving Under the Influence.
- Costs that are in excess of the remaining funding available under this agreement
- Transportation, materials, or other expense costs.

Docusign Envelope ID: 2882A6E4-BCEA-4ABD-92D6-9FECFF755E86

Compensation and Invoicing

The agency must submit invoices to the Institute of Police Technology and Management (IPTM) requesting reimbursement of qualified overtime costs. One all-inclusive invoice per pay period is preferred; however, if not submitted on a pay period basis, invoices must be submitted at least monthly for months in which qualified, reimbursable overtime activities took place.

Invoices shall be submitted via the online platform, the Integrated Program Activity Submission System (iPASS). Each invoice shall be accompanied by the following documentation:

- Drug Influence Evaluation face sheet(s) for each included evaluation
- Payroll documentation that clearly indicates that the hours worked conducting a drug influence evaluation under this contract were on overtime status along with the overtime rates that were paid. As this is a cost-reimbursable contract, the Institute of Police Technology and Management can only reimburse for an amount up to the total costs incurred for the overtime worked; therefore, the contracting agency must include either a pay stub or payroll ledger documentation indicating payment to each officer for which reimbursement is requested. It is the responsibility of the agency to redact any personally identifiable information (PII) such as social Security numbers prior to submission.

Invoices and required documentation should be submitted via the online platform, the Integrated Program Activity Submission System (iPASS).

Overtime pay rate for personnel shall be based on the actual cost per employee in accordance with the agency's payroll policy. Each agency shall comply with Fair Labor Standards Act (FLSA) requirements and thresholds for overtime accrual and payment and its own policies and procedures, insofar as those policies apply uniformly to both federally financed and other activities of the agency, as required by 2 CFR 200.403. Additional hours may be called overtime, call-out, off duty, extra, additional, etc.

As part of the "fully burdened" overtime costs, the agency can be reimbursed for the additional benefit paid on the overtime worked. These benefit costs must be additional costs incurred specifically as a result of the overtime being reimbursed. These benefits may include the associated portions of FICA (Social Security and Medicare), Worker's Compensation, Retirement benefits, and fixed shift differential costs. Prorated portions of leave accrual, health/life insurance, uniform allowance, vehicle usage, salary incentive, and other standard benefits cannot be reimbursed as they are not additional costs incurred specifically as a result of the overtime worked.

A final invoice must be received by October 9, 2026, or payment will be forfeited.

Designated Signatory Authority

NAME	TITLE
Sheri Bohm	**Assistant Finance Director**

Docusign Envelope ID: 2882A6E4-BCEA-4ABD-92D6-9FECFF755E86

Agreement Expiration and Termination
The Drug Recognition Expert (DRE) Overtime Call-Out Reimbursement Agreement will expire on September 30, 2026, or when the total funding available in the agreement has been exhausted, whichever comes first.

By written notice to the agency, IPTM may terminate this agreement prior to the above listed expiration if the agency fails to comply with the terms, conditions, or requirements of this agreement, the applicable sections of Part V: Acceptance and Agreement of Project M5OT-2026-00201, Contract G3I85, any other FDOT subgrant project awarded to the agency, or the evaluation and reporting protocols of Florida's Drug Evaluation and Classification Program.

Execution of Agreement. This Agreement may be simultaneously executed in a minimum of two counterparts, each of which so executed shall be deemed to be an original, and such counterparts together shall constitute one in the same instrument.

University of North Florida Training and Services Institute, Inc.
d/b/a Institute of Police Technology and Management

_____ _____
George Androuin, Assistant Vice President Date

_____ _____
Cameron Pucci, Director Date

AGENCY ACKNOWLEDGEMENT: By signing below, I certify that I have read the entire document, agree to abide by the pricing and all terms and conditions of this Letter of Agreement and Contract, and that I am authorized to sign for the Vendor.

Agency Name: City of Tarpon Springs

Address: 324 Pine Street, Tarpon Springs, FL 34689

_____ _____
Agency's Authorized Agent Signature Date

John Koulianos Mayor
Printed Name Title

DocuSigned by:
Chris Craig
B67DFADA6D7C4E4...
11/13/2025 | 10:29 AM EST
FDOT APPROVAL

Docusign Envelope ID: 2882A6E4-BCEA-4ABD-92D6-9FECFF755E86

Attachment

FY2026 - Subcontract Agreement Required Federal Clauses, Per Part V

i. The parties to this subcontract shall be bound by all applicable sections of Part V: Acceptance and Agreement of Project # M5OT-2026-00201 FDOT Contract # G3I85. A final invoice must be received by October 9, 2026 or payment will be forfeited.

ii. **Buy American Act.** The Buy America Act prohibits the use of Federal highway safety grant funds to purchase any manufactured product or software/information technology systems whose unit purchase price is $5,000 or more, including motor vehicles, that is not produced in the United States. NHTSA and/or FHWA may waive those requirements if (1) their application would be inconsistent with the public interest; (2) such materials and products are not produced in the United States in sufficient and reasonably available quantities and of a satisfactory quality; or (3) the inclusion of domestic material will increase the cost of the overall Project contract by more than 25 percent.

iii. **Certification Regarding Federal Lobbying.** The subcontractor certifies, to the best of his or her knowledge and belief, that:

1. No Federal appropriated funds have been paid or will be paid, by or on behalf of the undersigned, to any person for influencing or attempting to influence an officer or employee of any agency, a Member of Congress, an officer or employee of Congress, or an employee of a Member of Congress in connection with the awarding of any Federal contract, the making of any Federal grant, the making of any Federal loan, the entering into of any cooperative agreement, and the extension, continuation, renewal, amendment, or modification of any Federal contract, grant, loan, or cooperative agreement.

2. If any funds other than Federal appropriated funds have been paid or will be paid to any person for influencing or attempting to influence an officer or employee of any agency, a Member of Congress, an officer or employee of Congress, or an employee of a Member of Congress in connection with this Federal contract, grant, loan, or cooperative agreement, the undersigned shall complete and submit Standard Form-LLL, ‘‘Disclosure Form to Report Lobbying,’’ in accordance with its instructions.

3. This certification is a material representation of fact upon which reliance was placed when this transaction was made or entered into. Submission of this certification is a prerequisite for making or entering into this transaction imposed by section 31 U.S.C 1352. Any person who fails to file the required certification shall be subject to a civil penalty of not less than $10,000 and not more than $100,000 for each such failure.

iv. **Cooperation with the Inspector General.** It is the duty of every subcontractor to cooperate with the inspector general in any investigation, audit, inspection, review, or hearing pursuant to this Agreement. Section 20.055(5), F.S.

Docusign Envelope ID: 2882A6E4-BCEA-4ABD-92D6-9FECFF755E86

v. **DBE Assurance**. The consultant or contractor and subconsultant or subcontractor shall not discriminate on the basis of race, color, national origin, or sex in the performance of this contract. The consultant or contractor shall carry out applicable requirements of 49 CFR, Part 26 in the award and administration of USDOT-assisted contracts. Failure by the consultant or contractor to carry out these requirements is a material breach of this contract, which may result in the termination of this contract or such other remedy, as the Subrecipient or the Department deems appropriate.

vi. **E-Verify**. Any subcontractors performing work or providing services pursuant to the subgrant agreement are required to utilize the U.S. Department of Homeland Security's E-Verify system to verify the employment eligibility of all new employees hired by the subcontractor during the term of the Agreement.

vii. **Nondiscrimination**. During the performance of this subcontract, the Subcontractor agrees:

1. To comply with all Federal nondiscrimination laws and regulations, as may be amended from time to time

2. Not to participate directly or indirectly in the discrimination prohibited by any Federal non-discrimination law or regulation, as set forth in Appendix B of 49 CFR part 21 and herein

3. To permit access to its books, records, accounts, other sources of information, and its facilities as required by the FDOT State Safety Office, USDOT, NHTSA, or FHWA

4. That, in the event a Subcontractor fails to comply with any nondiscrimination provisions in this subgrant, the Subrecipient will have the right to impose such subgrant sanctions as it or NHTSA and/or FHWA determines are appropriate, including but not limited to withholding payments to the Subcontractor under the contract/agreement until the Subcontractor complies; and/or canceling, terminating, or suspending a contract or funding agreement, in whole or in part.

viii. **Clean Air Act and Federal Water Pollution Control Act**. Subcontracts for amounts in excess of $150,000 must comply with all applicable standards, orders or regulations issued pursuant to the Clean Air Act (42 U.S.C. 7401-7671q) as amended, and the Federal Water Pollution Control Act as amended (33 U.S.C. 1251-1387) as amended. Violations must be reported to the Federal awarding agency and the Regional Office of the Environmental Protection Agency (EPA).

ix. **Integrity Certification**. The Subcontractor certifies that neither it nor its contractors are presently debarred, suspended, proposed for debarment, declared ineligible, or voluntarily excluded from participating in this Agreement by any federal department or agency. This certification is a material representation of fact upon which the Department is relying in entering this Agreement. If it is later determined that the Subcontractor knowingly rendered an erroneous certification, in addition to other remedies available to the federal government, the department or agency with which this transaction originated may pursue available remedies, including suspension and/or debarment. The Subcontractor shall provide to the Department

Docusign Envelope ID: 2882A6E4-BCEA-4ABD-92D6-9FECFF755E86

immediate written notice if at any time the Subcontractor learns that its certification was erroneous when submitted or has become erroneous by reason of changed circumstances.

x. **Contract Work Hours and Safety Standards Act**. All subcontracts in excess of $100,000 that involve the employment of mechanics or laborers must include a provision for compliance with 40 U.S.C. 3702 and 3704, as supplemented by Department of Labor regulations (29 CFR Part 5). Under 40 U.S.C. 3702 of the Act, each contractor must be required to compute the wages of every mechanic and laborer on the basis of a standard work week of 40 hours. Work in excess of the standard work week is permissible provided that the worker is compensated at a rate of not less than one and a half times the basic rate of pay for all hours worked in excess of 40 hours in the work week. The requirements of 40 U.S.C. 3704 are applicable to construction work and provide that no laborer or mechanic must be required to work in surroundings or under working conditions which are unsanitary, hazardous or dangerous. These requirements do not apply to the purchases of supplies or materials or articles ordinarily available on the open market, or contracts for transportation or transmission of intelligence.

xi. **Indemnification and Insurance**. To the extent permitted by law and as limited by and pursuant to the provisions of Section 768.28, F.S., the Subcontractor shall indemnify and hold harmless the Subrecipient and the State of Florida, Department of Transportation, including the Department's officers and employees, from liabilities, damages, losses and costs, including, but not limited to, reasonable attorney's fees, to the extent caused by the negligence, recklessness or intentional wrongful misconduct of the contractor/consultant and persons employed or utilized by the contractor/consultant in the performance of this Agreement. This indemnification shall survive the termination of this Agreement. Nothing contained in this paragraph is intended to nor shall it constitute a waiver of the State of Florida and the Subrecipient's sovereign immunity.

xii. **Policy on Banning Text Messaging While Driving Act**. In accordance with Executive Order 13513, Federal Leadership on Reducing Text Messaging While Driving, and DOT Order 3902.10, Text Messaging While Driving, subcontractors are encouraged to:

Adopt and enforce workplace safety policies to decrease crashes caused by distracted driving, including policies to ban text messaging while driving company-owned or rented vehicles, Government-owned, leased or rented vehicles, or privately-owned vehicles when on official business or when performing any work on behalf of the Subrecipient agency and/or the Government.

Conduct workplace safety initiatives in a manner commensurate with the size of the business, such as establishment of new rules and programs or re-evaluation of existing programs to prohibit text messaging while driving, and education, awareness, and other outreach to employees about the safety risks associated with texting and driving.

Insert the substance of this section, including this sentence, in all sub-agreement/subcontracts funded ed with the subaward provided under this Agreement that are $15,000 or more.

Docusign Envelope ID: 2882A6E4-BCEA-4ABD-92D6-9FECFF755E86

xiii. **Human Trafficking**. The Subcontractor agrees that it and its employees that perform any work on the subcontract shall not, during the term of this Agreement, engage in trafficking in persons, procure a commercial sex act, or use forced labor in the performance of work on the subcontract.

xiv. **Contracting with Small and Minority Businesses, Women's Business Enterprises, and Labor Surplus Area Firms.** The Subcontractor agrees to take the following affirmative steps to assure that minority businesses, women's business enterprise, and labor surplus are used when possible:

1. Place qualified small and minority businesses and women's business enterprises on solicitation lists;

2. Assure that small and minority businesses, and women's business enterprises are solicited whenever they are potential sources;

3. Divide total requirements, when economically feasible, into smaller tasks or quantities to permit maximum participation by small and minority businesses, and women's business enterprises;

4. Establish delivery schedules, where the requirement permits, which encourage participation by small and minority businesses, and women's business enterprises;

5. Use the services and assistance, as appropriate, of such organizations as the Small Business Administration and the Minority Business Development Agency of the Department of Commerce; and

6. Requiring the prime contractor, if subcontracts are to be let, to take the affirmative steps listed in paragraphs (b)(1) through (5) of this section.

xv. **Termination for Convenience**. In accordance with Appendix II to 2 CFR Part 200—Contract Provisions for Non-Federal Entity Contracts Under Federal Awards, either Party may terminate this Agreement for convenience upon thirty (30) calendar days' advance written notice to the other Party. Termination of this Agreement, as such, will not affect payment for services satisfactorily furnished prior to the termination.

Public Works Department

325 East Pine Street
Tarpon Springs FL 34689
(727) 942-5610

Memorandum

Date: November 10, 2025

To: Tarpon Springs Board of Commissioners

From: Chris Cotta, Public Works Director Chris Cotta

Through: Charles Rudd, City Manager

Subject: First Amendment to Interlocal Agreement between Pinellas County and its National Pollutant Discharge Elimination System (NPDES) MS4 co-permittees for the continuation of our Surface Water Quality and Biological Monitoring program.

Recommendation
Board of Commissioners approval to move forward with an extension of the existing Interlocal Agreement between Pinellas County and City of Tarpon Springs (as co-permittee) that provides for testing of surface water quality and biological monitoring of stormwater discharges in the City of Tarpon Springs.

Background and Summary
Pinellas County and its MS4 co-permittees have an agreement dating back to 2020 that provides for Pinellas County to undertake testing of surface water and biological monitoring of stormwater on behalf of permittee communities located within Pinellas County, including Tarpon Springs. Pinellas County is proposing a 5-year extension of the original agreement.

Costs for the testing and monitoring services provided by Pinellas County are included in the Stormwater Dept's approved FY26 budget, under Account # 406-4802-538.34-00 (Other Contractual Services).

PINELLAS COUNTY PUBLIC WORKS MANAGES ENVIRONMENTAL, STORMWATER, AND TRANSPORTATION SYSTEMS TO PROVIDE A SAFE SUSTAINABLE, AND VIBRANT COMMUNITY FOR THE PEOPLE OF PINELLAS COUNTY

FIRST AMENDMENT TO THE INTERLOCAL AGREEMENT

BETWEEN PINELLAS COUNTY AND NPDES MS4 CO-PERMITTEES

FOR WATER QUALITY MONITORING AND ASSESSMENT

(PID No. 002318)

AGREEMENT PREPARED BY

DEPARTMENT OF PUBLIC WORKS

DIVISION OF ENVIRONMENTAL MANAGEMENT

NOVEMBER 2025

FIRST AMENDMENT TO THE INTERLOCAL AGREEMENT BETWEEN PINELLAS COUNTY AND NPDES MS4 CO-PERMITTEES FOR WATER QUALITY MONITORING AND ASSESSMENT

THIS FIRST AMENDMENT (hereinafter this "First Amendment") to the INTERLOCAL AGREEMENT BETWEEN PINELLAS COUNTY AND NPDES MS4 CO-PERMITTEES FOR WATER QUALITY MONITORING AND ASSESSMENT dated September 10, 2020 (hereinafter the "Interlocal Agreement"), entered into this _____ day of _____, 2025, between PINELLAS COUNTY, a political subdivision of the State of Florida (hereinafter the "COUNTY") and the following municipalities in Pinellas County, Florida: Town of Belleair, City of Belleair Beach, City of Belleair Bluffs, City of Clearwater, City of Dunedin, Town of Kenneth City, City of Gulfport, City of Indian Rocks Beach, City of Largo, City of Madeira Beach, Town of North Redington Beach, City of Oldsmar, City of Pinellas Park, Town of Redington Beach, Town of Redington Shores, City of St. Pete Beach, City of Safety Harbor, City of Seminole, City of South Pasadena, City of Tarpon Springs, and City of Treasure Island (although separate parties hereto collectively the "CO-PERMITTEES"); collectively the COUNTY and CO-PERMITTEES are referred to as the "PARTIES."

WITNESSETH:

WHEREAS, the PARTIES entered into the Interlocal Agreement on September 10, 2020; and

WHEREAS, the Interlocal Agreement terminates upon the CO-PERMITTEES full payment of COUNTY invoices for Fiscal Year 2025; and

WHEREAS, the PARTIES wish to extend the COUNTY'S performance of the Water Quality Monitoring and Assessment Program and term of the Interlocal Agreement for an additional five (5) years; and

WHEREAS, the Florida Department of Environmental Protection ("FDEP") NPDES MS4 Permit FLS000005 ("MS4 Permit") is still in effect as the COUNTY submitted an MS4 Permit re-application with the Cycle 4 Year 4 Annual Report to FDEP on February 28, 2023, and pursuant to Rule 62-624.420, F.A.C., the existing MS4 Permit "shall not expire until the [FDEP] has taken final action on the application for renewal or until the last day for seeking judicial review of the agency order or a later date fixed by order of the reviewing court" provided the renewal application is "timely and sufficient"; and

WHEREAS, the PARTIES wish to update the contact information in SECTION 4.

NOW THEREFORE, the Interlocal Agreement is amended as follows:

1. The COUNTY'S performance of the Water Quality Monitoring and Assessment Program, as set forth in SECTION 2 (COUNTY PERFORMANCE OF ASSESSMENT PROGRAM), is hereby extended an additional five (5) years to include Fiscal Years 2026, 2027, 2028, 2029, and 2030.

2. That SECTION 4. (NOTICE) shall be amended to read as follows:

All notices, payments, and other written communications between the parties shall be sent by electronic mail, certified U.S. mail, or recognized courier delivery service. Such notices shall be deemed effective upon delivery, as evidence by an electronic mail read receipt, a certified mail delivery receipt, or a courier service delivery receipt. Any notices, invoices, payments, and written communications shall be delivered to the PARTIES at their respective contact information as set forth below:

Belleair Bluffs:
Debra Sullivan
City Administrator
City of Belleair Bluffs
2747 Sunset Blvd.
Belleair Bluffs, FL 33770
727-584-2151
dsullivan@belleairbluffs-fl.gov

Belleair:
Ryan Womack
Public Works Superintendent
Town of Belleair
1075 Ponce De Leon Blvd.
Belleair, FL 33756
727-588-3769
rwomack@townofbelleair.net

Clearwater:
Sarah Kessler
CRS/MS4 Coordinator
City of Clearwater
P.O. Box 4748
Clearwater, FL 33758
727-444-8233
sarah.kessler@myclearwater.com

Belleair Beach:
Kyle Riefler
City Manager
City of Belleair Beach
444 Causeway Blvd.
Belleair Beach, FL 33786
727-229-8431
kyle.riefler@cityofbelleairbeach.com

Gulfport:
Tom Nicholls
Public Works Director
City of Gulfport
2401 53rd St. South
Gulfport, FL 33707
727-893-1090
tnicholls@mygulfport.us

Dunedin:
Michelle Monteclaro
Assistant Public Works Director
City of Dunedin
1405 County Road 1
Dunedin, FL 34698
727-298-3232
michelle.monteclaro@dunedin.gov

Kenneth City:
Kristin Cook
Deputy Clerk
Town of Kenneth City
6000 54th Ave. N.
Kenneth City, FL 33709
727-498-8948
kcook@kennethcityfl.org

Madeira Beach:
Megan Wepfer
Director of Public Works
City of Madeira Beach
300 Municipal Drive
Madeira Beach, FL 33708
727-543-8154
mwepfer@madeirabeachfl.gov

Oldsmar:
Johna Jahn
Interim Public Works Director
City of Oldsmar
100 State Street West
Oldsamr, FL 34677
813-749-1233
jjahn@oldsmarfl.gov

Redington Beach:
Adriana Nieves
Town Clerk
Town of Redington Beach
105 164th Ave.
Redington Beach, FL 33708
727-391-3875
townclerk@townofredingtonbeach.com

Safety Harbor:
Renee Cooper
Public Works Director
City of Safety Harbor
1200 Railroad Ave.
Safety Harbor, FL 34695
727-724-1550
rcooper@cityofsafetyharbor.com

Seminole:
Rodney Due
Public Works Director
City of Seminole
9199 113th St. N.
Seminole, FL 33772
727-397-6383
rdue@myseminole.com

Indian Rocks Beach:
Dean Scharmen
Public Works Director
City of Indian Rocks Beach
1507 Bay Palm Blvd.
Indian Rocks Beach, FL 33785
727-595-6889
dscharmen@irbcity.com

Largo:
Brooke Driskell
Stormwater Program Administrator
City of Largo
P.O. Box 296
Largo, FL 33779
727-587-6713
bdriskell@largo.com

North Redington Beach:
Russ Schmader
Public Works Supervisor
Town of North Redington Beach
190 173rd Ave.
North Redington Beach, FL 33708
727-391-4848
publicworks@townofnrb.com

Pinellas Park:
Kyle Arrison
Transportation, Stormwater, Construction
Division Director
City of Pinellas Park
6250 82nd Ave. N.
Pinellas Park, FL 33781
727-369-5621
karrison@pinellaspark.com

Redington Shores:
Margaret Carey
Town Clerk
Town of Redington Shores
17425 Gulf Blvd.
Redington Shores, FL 33708
727-397-5538
townclerk@redshoresfl.com

South Pasadena:
Shawn Shimko
Public Works Director
City of South Pasadena
7047 Sunset Dr. S.
South Pasadena, FL 33707
727-384-0701
sshimko@mysouthpasadena.com

St. Pete Beach:
Frances Robustelli
City Manager
City of St. Pete Beach
155 Corey Avenue
St. Pete Beach, FL 33706
727-426-3521
frobustelli@stpetebeach.org

Tarpon Springs:
Anthony "Tony" Mannello
Streets and Stormwater Supervisor
City of Tarpon Springs
325 E. Pine Street
Tarpon Springs, FL 34689
727-942-5606
amannello@ctsfl.us

Treasure Island:
Gary Volenec
Public Works Director
City of Treasure Island
10451 Gulf Blvd.
Treasure Island, FL 33706
727-547-4575
gvolenec@mytreasureisland.org

3. The term of the Interlocal Agreement, as set forth in SECTION 5 (AGREEMENT TERM), is hereby extended an additional five (5) years and shall remain in effect until all invoices for Fiscal Year 2030 are paid by CO-PERMITTEES.

4. This First Amendment will be effective upon execution by all PARTIES and filing with the Clerk of the Circuit Court of Pinellas County pursuant to F.S. § 163.01(11).

5. All other provisions and conditions of the Interlocal Agreement shall remain in full force and effect.

**FIRST AMENDMENT TO THE INTERLOCAL AGREEMENT
BETWEEN PINELLAS COUNTY AND NPDES MS4 CO-PERMITTEES
FOR WATER QUALITY MONITORING AND ASSESSMENT**

IN WITNESS WHEREOF, the parties hereto have caused this First Amendment to be executed on the day and year first above written.

PINELLAS COUNTY, FLORIDA, by and through its
Board of County Commissioners

By: _____
Brian Scott, Chair

ATTEST:

_____
Ken Burke, Clerk of the Circuit Court

APPROVED AS TO FORM:

By: _____
Office of County Attorney

FIRST AMENDMENT TO THE INTERLOCAL AGREEMENT BETWEEN PINELLAS COUNTY AND NPDES MS4 CO-PERMITTEES FOR WATER QUALITY MONITORING AND ASSESSMENT

CITY OF TARPON SPRINGS

John Koulianos Mayor	Charles Rudd City Manager
	Seal
Approved as to form:	Attest:
Andrew Salzman Attorney	Irene S. Jacobs CMC City Clerk

CITY OF TARPON SPRINGS
PLANNING & ZONING BOARD / BOARD OF COMMISSIONERS
NOVEMBER 17, 2025 / DECEMBER 9, 2025 / DECEMBER 16, 2025

STAFF REPORT, November 10, 2025

Application No. / Project Title: 25-28 / Tarpon Springs One, LLC, Rezoning

Ordinance: Draft Ordinance #2025-07

Staff: Patricia L. McNeese, AICP
Planning Supervisor

Applicant / Owner: Tarpon Springs One LLC (Thomas Scannell)

Property Size: 17.49 acres total:
- 13.93 acres of uplands
- 3.56 acres of wetlands

Current Land Use: Employment (E) and Preservation (P)

Current Zoning: Industrial Planned Development (IPD)

Proposed Zoning: Industrial Restricted (IR)
Land Conservation (LC)

Location / Parcel ID: 310, 320 and 340 Anclote Road on the North and East side of Anclote Road; Parcel IDs 01-27-15-89136-000-0631, 01-27-15-879136-000-0630 (Lot 63), and, 01-27-15-89136-000-0620 ("Lot 62")

SUMMARY:
The applicant has requested rezoning of the property from Industrial Planned Development (IPD) district to Industrial Restricted (IR) district to expand the allowable uses on the site. The applicant has proposed placing a restrictive covenant on the property prohibiting some uses allowable in the requested IR district. This is discussed in the review criteria analysis of this report.

PRELIMINARY STAFF RECOMMENDATION:
Staff recommends ***denial of Ordinance 2025-07*** amending the Official Zoning Atlas from Industrial Planned Development (IPD) District to Industrial Restricted (IR).

CURRENT PROPERTY INFORMATION:

Use of Property:	Vacant, wooded
Site Features:	The site consists of wooded uplands and wetlands
Vehicle Access:	The property borders both the east-west and north-south corridors of Anclote Road.

SURROUNDING ZONING & LAND USE:

	Zoning:	Land Use:
North:	Pinellas County: • R-4 (One, Two and Three-Family Residential District) Tarpon Springs: • R-70 (One and Two Family Residential District)	Pinellas County: • Residential Urban (RU) • Residential Medium (RM) Tarpon Springs: • Residential Urban (RU)
South:	Tarpon Springs: • WDII (Waterfront Marine Industry Development District) • WDI-B (Waterfront Commercial Fishing and Tourism Redevelopment District)	Tarpon Springs: • Industrial (I) • Industrial/Employment – Water Dependent (IE-WD)
East:	Tarpon Springs: • IR (Industrial Restricted)	Tarpon Springs: • Employment (E)
West:	Tarpon Springs: • RM (Residential Multifamily)	Tarpon Springs: • Residential Urban (RU) • Resort Facilities Overlay (RFO)

HISTORICAL ZONING TIMELINE:
The property is currently located in the Employment (E) Future Land Use Map (FLUM) category and the Industrial Planned Development (IPD) zoning district. Staff conducted extensive research into the history of the property (all three parcels listed above) including all City records, property records of the Pinellas County Property Appraiser, and, document records of the Pinellas County Clerk of the Circuit Court and Comptroller. No record of a City-approved, or County-approved planned development has been located.

The following is the known zoning-related history of the subject property:

- 1976 Zoning Map: The subject property was zoned TP (Travel Park) and IR (Industrial Restricted).
- 1981 Zoning Map: The subject property was zoned TP (Travel Park).
- September 5, 1989 Zoning Map: The subject property was zoned Residential Multifamily (RM-15) and Neighborhood Business (NB) as shown in Ordinance 89-17 (adjacent property).
- October 10, 1989: The 1989 Comprehensive Plan was adopted under Ordinance 89-35 with policies that preferred the planned development designation for vacant industrial lands north of the Anclote River.
- May 1, 1990: The 1989 zoning map in place at the time was adopted along with the LDC under Ordinance 90-10.
- September 18, 1990: Adjacent vacant property to the east (*not a part of this application*), located at 240 Anclote Road (Lot #64, Parcel ID #01-27-15-89136-000-0640)was annexed into the City and zoned with an IPD designation under Ordinances 90-37 and 90-38 in accordance with the Comprehensive Plan policies in effect at the time.

ADDITIONAL BACKGROUND INFORMATION:

- The survey shows that the property contains tidal wetlands that are directly connected to the Anclote River via a culvert located under Anclote Road. There is also a wetland area at the north end of the property.
- The property is bordered on two sides by residential developments. Highland Grove Manor to the north was platted in 1957 and is essentially a single roadway (Jeru Blvd) with a mix of single-family and multi-family buildings, the majority of which are not annexed into the City. Tarpon Key Subdivision to the west was platted in 2013, is within the City limits, and is built out with single family homes. The area south of the property is occupied by waterfront uses including boat storage and marinas. To the east of this property is the existing vacant parcel at 240 Anclote Road. It is located in the Industrial Restricted Zoning District.
- The subject property is located in the Coastal High Hazard Area.

ZONING DISTRICT AND FUTURE LAND USE DESIGNATION FEATURES:

	CURRENT ZONING **Industrial Planned Development**	**PROPOSED ZONING** **Industrial Restricted**
Residential Density (dwelling units/acre):	No permanent units; Lodging of 40 du/acre	No permanent units; Lodging of 40 du/acre
Allowable Uses	**LDC Section 78.03 (IPD)**	**LDC Section 25.17 (IR)**
Permitted Uses:	Assembly Halls, Convention Centers; Community Service Uses; Construction Service Establishments; Health Clubs; Light Manufacturing; Office and Research Parks; Warehouses; Wholesale Trade	Construction Material Establishments; Construction Service Establishments ; Light and Heavy Printing Establishments; Light Manufacturing; Light Utility Service; Miniwarehouses; Motor Freight Terminals; Motor Pool Facility; Rental Service Establishments; Research and Development; Vehicle Repair (Minor); Vehicle Sales and Rental Establishments; Warehouses; Wholesale Trade
Conditional Uses:	Commercial Marinas; Communication Towers; Financial Institutions ; Heavy Manufacturing; Hotels/Motels; Miniwarehouses; Tennis or Racquet Club; Yacht Club	Business and Professional Offices; Communication Towers; Community Service Uses; Correctional Institutions; Emergency Service Facilities; Heavy Utility Service; Heliports; Hotels/Motels; Junkyards/Salvage Yards; Retail Sales Establishments; Transportation Terminals;

(continued)

	CURRENT ZONING Industrial Planned Development	PROPOSED ZONING Industrial Restricted
Conditional Uses:		Vehicle Repair (Major); Manufacturing of Recreation Watercraft; Overnight Boarding of Animals; Commercial Recreation Facilities; Schools of General Education
EMPLOYMENT Future Land Use Map Category		
Allowable Uses:	Office; Research/Development, Light/Heavy; Manufacturing, Light/Medium; Wholesale/Distribution; Storage/Warehouse; Marina Facilities	
Allowable Uses Subject to Acreage Thresholds:	3-Acre Maximum: Retail; Personal Services; Lodging 5-Acre Maximum: Commercial/Business Service; Food Crop Production; Transportation/Utility	
Zoning Dimensional Criteria:	**LDC Section 78.03(D)**	**LDC Section 25.17(D)**
Minimum Lot Area	15,000 square feet	5,000 square feet
Minimum Lot Width	150 feet	50 feet
Minimum Lot Depth	n/a	80 feet
Maximum Height	60 feet	40 feet
Minimum Front Yard	20 feet	10 feet
Minimum Side/Street Yard	20 feet	10 feet
Rear Yard	20 feet	25 feet
From Abutting Collector (Anclote Road)	35 feet	n/a
From Adjoining Residential	75 feet	n/a
Floor Area Ratio*	0.50 (IPD), 0.10 (P)	0.50 (IR), 0.10 (P)
Open Space Ratio	0.20	0.15
Impervious Surface Ratio*	0.80 (IPD), 0.20 (P)	0.85 (E/IR), 0.20 (P)

*Employment (E) FLUM category allows floor area ratio of 0.60 and impervious surface ratio of 0.85.

REVIEW STANDARDS / STAFF ANALYSIS - REZONING:
Section 207.03(A) of the Tarpons Springs Comprehensive Zoning and Land Development Code (LDC) provides standards for zoning map amendments. These standards, along with planning staff's analysis are provided below:

1. The amendment is consistent with the goals, objectives and policies of the Tarpon Springs Comprehensive Plan.

Staff Analysis:
Employment Category
The property is located within the Employment (E) Future Land Use Map (FLUM) category. The purpose of the Employment category is to "recognize areas developed with, or appropriate to be developed with, a wide range of primary employment uses, flex space, and for uses that have minimum external impacts" (Future Land Use Categories & Rules Table). Both the IPD and the IR zoning designations are aligned with the overlying Employment FLUM category.

Place-Based Area Map
The Place-Based Area Map of the Comprehensive Plan classifies this area of the City as Transitional which is described as "areas where transition is already happening, or development pressures are not in alignment with Future Land Use Categories. These areas include the industrial and residential areas north of the Anclote River and the U.S. 19 corridor. Specific area and corridor plans should be prepared to manage future growth and transition of the areas. Until such time transitional areas are planned for, requests for Future Land Use Map amendments and zoning changes will be based on current Future Land Use Map and Comprehensive Plan policies" (Policy FLU 2.1.2.e).

2045 Comprehensive Plan Policies: These policies demonstrate support for the preservation of the City's existing industrial designations for job creation, and, for the protection of natural features, including wetlands. The planned development approach supports these policies.

- ***FLU 1.1.7***: Protect the City's remaining industrially designated lands from incremental land use amendments to non-industrial uses.
- ***FLU 1.1.8***: Evaluate the permitted and conditional uses within the City's industrial zoning districts and amend, where necessary, to protect the integrity of the industrial designations and priority use of these areas for primary job creation.
- ***FLU 1.3.1***: Require development proposals to evaluate, protect and preserve wetlands and areas of significant upland habitat.
- ***CON 1.4***: Protect and improve the function of all wetlands and areas of significant upland habitat as defined in the Future Land Use Element.
- ***CON 1.4.1***: Preserve and enhance all remaining wetlands during the development review process. On-site wetland alterations that result in a net gain of wetland habitat may be permitted.
- ***CON 1.4.3***: Require a minimum 25-foot buffer zone adjoining all wetlands in the Land Development Code.
- ***CON 1.4.4***: Revise the Land Development Code acreage thresholds to require all development and redevelopment adjacent to identified wetlands and/or areas of significant upland habitat to assess natural systems/biological/wildlife impacts and evaluate alternatives to eliminate or minimize adverse impacts.

1989 Comprehensive Plan Policies: These policies show the preferred use of the planned development process, especially for lands designated as "transitional" at the time. The subject

property was designated as "Transition Industrial (TLI)" on the 1989 Future Land Use Map and is currently located in the Transitional area on the City's 2045 Place-Based Area Map.

"9J-5.006(3)(c)4.2: Utilize the Planned Development Performance Zoning concept where use and design control is necessary to assure land use compatibility, prevent urban sprawl, promote the infill development of vacant properties, and maximize the efficient cost effective provision of public services and facilities;

Future Land Use Map 'Transition Industrial' (TLI) VII. Year 2000 Future Land Use Map, D. Transitional Land Uses:

1. Transitional areas are designated where an expansion of the adjoining land use is likely to occur.
2. The expansion shall be deemed consistent with the Tarpon Springs Land use Plan after a compatibility review. However, consistency with the Pinellas Countywide Land Use Plan is required prior to the issuance of development permits.
3. Transitional areas shall be re-evaluated as a primary character is established or begins developing.
4. The transition zones shall be designated as following:
   a. Transition Commercial (TGC)
   b. Transition Office (TGO)
   c. Transition Industrial (TLI)
   d. Transition Tourist Oriented Commercial (TTOCC)
5. *Use of the Planned Development Process shall be preferred* (emphasis added).
6. The Transition Industrial (TLI) zone shall require a 75 foot buffer adjoining residential areas and shall not allow the development of heavy industrial uses."

Planned Development Intent – Section 76.00 of the Land Development Code (LDC): The LDC language below reflects 1989 Comprehensive Plan Section "VII. Year 2000 Future Land Use Map, N. General" and was adopted into the LDC to specifically carry out those policies.

"The intent of the ***Planned Development District mechanism*** to carry out the following objectives:

(A) Provide an alternate method of land development not available within the framework of other zoning districts.
(B) To allow the development of sites that would normally be difficult to develop due to topography, soils, or other site specific features.
(C) To allow the most beneficial use of the site in terms of maintaining compatibility with the adjoining neighborhood.
(D) To preserve significant environmental, topographical, or natural features.
(E) To allow a variety of housing types.
(F) To accommodate a mix of uses.
(G) To offer a high level of recreation and open space amenities.
(H) To ensure the ample provision of open space.
(I) To encourage the orderly concentration of development on vacant parcels of land within the existing developed areas.

(J) To prevent urban sprawl, through the use of infill development and the maximum use of existing public facilities that are currently in place" (emphasis added).

The IPD designation of this property aligns with the above Planned Development intent, especially with objectives A, B, C and D, as follows:

(A): Alternate Method of Land Development: The property is in close proximity to residential development on the north and west sides, attesting to the transitional nature recognized by the Year 2000 Comprehensive Plan. The transitional character continues to be recognized in the 2045 Comprehensive Plan. The IPD mechanism provides flexible design criteria intended to facilitate achievement of internal development site layout goals while maintaining compatibility with surrounding development. This property is located on Anclote Road, a Pinellas County Collector roadway. Access points and traffic generation will be potentially challenging aspects of any development along this corridor which is currently operating at Level of Service "C" and will experience increased traffic as properties develop. The Planned Development design flexibility mechanisms can be used to addressing some of those challenges.

(B) Site-Specific Features, and, (D) Preservation of Significant Natural Features: The applicant has provided a surveyed wetland delineation of the property. The 2045 Comprehensive Plan prohibits the alteration of wetlands (Policies FLU 1.3.1 and CON 1.4.1). The location and sensitivity of the wetlands (direct connection to the Anclote River) will affect the layout of development. The IPD mechanism provides flexible design criteria that may assist in a site layout that avoids direct impacts to wetlands. The IPD design criteria also provides for a minimum 50-foot wetland buffer. If the property is rezoned to IR, the required wetland buffer would be reduced to 25 feet (Policy CON 1.4.3). The habitat classification of the uplands on site has not been determined. If it is classified as significant upland habitat per Policy FLU 1.3.2 of the Comprehensive Plan there may be further preservation requirements that will affect the site development layout.

(C) Beneficial Use of Site; Neighborhood Compatibility: The property is in close proximity to residential development on the north and west sides, attesting to the transitional nature recognized by the Comprehensive Plan. The IPD mechanism provides flexible design criteria to achieve site layout features that maintain compatibility with the surrounding development. Beneficial use of the site is provided for under the current IPD designation.

The applicant has stated that the zoning change would "provide certainty to prospective buyers, expand the permitted uses available as-of-right, and better conform with the surrounding uses." However staff contends the following:

- Several of the uses that would be newly allowed under the IR district (i.e., not currently allowed under the IPD) are restricted in size by the Employment Future Land Use Map category, or, may be impractical (i.e., heliport, salvage yard, etc.).

- There are additional mechanisms available for a developer to propose a use, mix of uses, and layout designed to fit market needs. Those mechanisms include development agreements, restrictive covenants and similar instruments that would be easier to implement under a Planned Development project.

- Although, as the applicant points out, there is no known site plan for this property, the Planned Development and IPD standards contained in Article V of the Land Development provide a clear set of standards and a list of permitted (by right) and conditional uses for development of the property. The existing IPD zoning *is the certainty* provided to prospective buyers. Since any approved site plan would have expired by now (see LDC Sections 81.00 and 82.00) a new proposal will be required. LDC Section 84.00(A) states, "Once a Preliminary or Final Development Plan has expired, subsequent proposals shall be processed in the same manner as new submissions." Also, LDC Section 85.00(A) of the Land Development Code states "Once a Preliminary Development Plan has been approved, any *amendment* to the Zoning District shall be processed in accordance with the procedures required for a new submission" (emphasis added). The intent of the code here is that the zoning is preserved and need not be re-adopted. It is only the site plan (development plan) that would be "*processed in the same manner"* as a new application.

IR Comprehensive Plan Consistency Summary

The requested zoning change from Industrial Planned Development (IPD) to Industrial Restricted (IR) is not supported by the Comprehensive Plan, including the Future Land Use Map (FLUM) and the Place-Based Area Map. Since adoption of the 1989 Comprehensive Plan, and continuing to the current 2045 Comprehensive Plan, the City's remaining industrial lands are called out for preservation in the transitional context of this general area north of the Anclote River. The physical and neighborhood features present some challenges for development design that the planned development mechanism is best able to address (See LDC Section 76.00, provided on page 6 of this report). The planned development framework has been identified in the past as the best means of providing for design flexibility to the benefit of the developer and the neighborhood, and, to maximize protection of known environmental features.

Staff concludes that a rezoning from IPD to IR for this property is not sufficiently supported by the 2045 Comprehensive Plan.

2. The available uses to which the property may be put are appropriate to the property in question and are compatible with the existing and planned uses in the area.

Staff Analysis: The allowable uses are listed in the table on pages 3-4 of this report. As mentioned in the Comprehensive Plan consistency analysis above, this portion of the City north of the Anclote River is in transition with a developing mix of industrial and residential uses on a patchwork of annexed and unincorporated properties. The City is interested in maintaining the employment base provided by the industrial uses in this area. Several of the uses listed under both the IPD and the IR zoning districts are generally appropriate to the intent of the Employment FLUM category. All development proposals in the City, whether by-right, through the Site Plan process, or through the Planned Development process must be consistent with the City's Comprehensive Plan (see review criteria in LDC Section 210.05 and LDC Section 79.00), and therefore must address compatibility issues. In the IR district, uses allowable by conditional use could address compatibility through project adjustments that are non-dimensional (dimensional adjustments would have to be handled through the variance process). In the IPD district compatibility issues for any proposed project could be addressed via the flexible design criteria

mechanism of the Planned Development framework, including dimensional criteria (see LDC Section 83.00). Therefore, this criterion is met now without the need to rezone the property.

Restrictive Covenant Proposal: The applicant has proposed recording of a restrictive covenant attached to the property to run with the land. The table below (page 8) lists the permitted and conditional uses in the Industrial Restricted (IR) Zoning District. If the Board wishes to approve the IR zoning change with a restrictive covenant on the property, staff recommends restricting (not allowing) the uses indicated on the table below. The restrictive covenant would have to be recorded on the property before the ordinance is adopted

Staff Recommendations for Use Restrictions in the Industrial Restricted (IR) District

Industrial Restricted Allowable Uses	Staff Recommendation for Restrictive Convenant
Rental Service Establishments	Allowed, Subject to 3-acre maximum
Retail Sales Establishments	Allowed, Subject to 3-acre maximum
Commercial Recreation Facilities	Allowed, Subject to 3-acre maximum
Manufacturing of Recreation Watercraft	Allowed
Emergency Service Facilities	Allowed
Emergency Service Facilities	Allowed
Schools of General Education	Allowed
Community Service Uses	Allowed
Light Manufacturing	Allowed
Business and Professional Offices	Allowed
Warehouses	Allowed
Wholesale Trade	Allowed
Communication Towers	Allowed
Miniwarehouses	Allowed
Hotels/Motels	Allowed
Research and Development	Allowed
Vehicle Sales/Rental	Not Allowed
Overnight Boarding of Animals	Not Allowed
Construction Material Establishments	Not Allowed
Light/Heavy Printing Establishments	Not Allowed
Motor Freight Terminals	Not Allowed
Motor Pool Facility	Not Allowed
Vehicle Repair (Major and Minor)	Not Allowed
Correctional Institutions	Not Allowed
Heavy Utility Service	Not Allowed
Heliports and Helistops	Not Allowed
Junkyards/Salvage Yards	Not Allowed
Transportation Terminals	Not Allowed
Construction Service Establishments	Not Allowed
Vehicle Sales and Rental	Not Allowed
Landscape Service Establishments	Not Allowed

3. **The amendment shall provide for efficient and orderly development considering the impact upon growth patterns and the cost to the City to provide public facilities.**

   Staff Analysis: The amendment could lead to greater environmental impacts on site due to the reduced wetland setback requirement that would apply, it may reduce the ability to plan a development layout without the need for separate variances, it may reduce available mechanisms for addressing neighborhood compatibility, and, it may reduce the ability to address transportation access/volume issues along Anclote Road.

4. **The amendment will not adversely impact nor exceed the capacity or the fiscal ability of the City to provide public facilities, including transportation, waste and sewer, solid waste, drainage, recreation, education, fire protection, library service and other similar public facilities. Compliance with the adopted Levels of Service standards can be demonstrated if necessary.**

   Staff Analysis: The City has the capacity to serve the property with City facilities including utilities, solid waste, fire/emergency services and law enforcement services without undue fiscal impacts. Compliance with adopted Levels of Service is expected to be achievable under both the IPD and the IR zoning designations.

TECHNICAL REVIEW COMMITTEE:
The Technical Review Committee (TRC) reviewed this project on May 1, 2025 for completeness and conformance to the Land Development Code. The TRC determined that the application was complete and ready for processing. TRC comments are attached.

PUBLIC CORRESPONDENCE:
The property owners within 500 feet were sent written notification in accordance with Section 206.00(J)(4) of the City of Tarpon Springs Comprehensive Zoning and Land Development Code. The notice went to 111 addresses. Notice was advertised in the *Tampa Bay Times* per Chapter 166.041, Florida Statutes and the property was posted. One comment letter in opposition was received.

ATTACHMENTS:
1. Slide Presentation
2. Draft Ordinance 2025-07
3. Application, Applicant's Narrative, Applicant's Letter
4. Deed
5. Property Survey
6. Historical Zoning Maps and Ordinances
7. Technical Review Committee Comments
8. Legal Public Notice
9. Citizen Correspondence

TARPON SPRINGS ONE, LLC
310, 320, AND 340 ANCLOTE ROAD
REZONING
#25-28

Planning & Zoning Board – November 17, 2025

Board of Commissioners – December 9, 2025 and, December 16, 2025

SUMMARY OF REQUEST

- **#25-28 – Ordinance 2025-07** Rezoning
  - Location: 310, 320 and 340 Anclote Road
  - Future Land Use: Employment (E) and Preservation (P)
  - **ZONING**:
    - Current: Industrial Planned Development (IPD)
    - Proposed: Industrial Restricted (IR)
  - 17.49 acres of property (3 parcels)
    - 13.93 acres of wooded uplands
    - 3.56 acres of wetlands
- **Applicant/Owner:** Tarpon Springs One, LLC; Thomas Scanell
- There is no approved IPD site plan on file with the County or City (see staff report for zoning history).

CITY OF TARPON SPRINGS
PLANNING & ZONING DEPARTMENT

LOCATION & CONTEXT



CITY OF TARPON SPRINGS
PLANNING & ZONING DEPARTMENT

LOCATION & CONTEXT – FUTURE LAND USE MAP



Unshaded Areas are in Unincorporated Pinellas County

CITY OF TARPON SPRINGS
PLANNING & ZONING DEPARTMENT

LOCATION & CONTEXT - ZONING

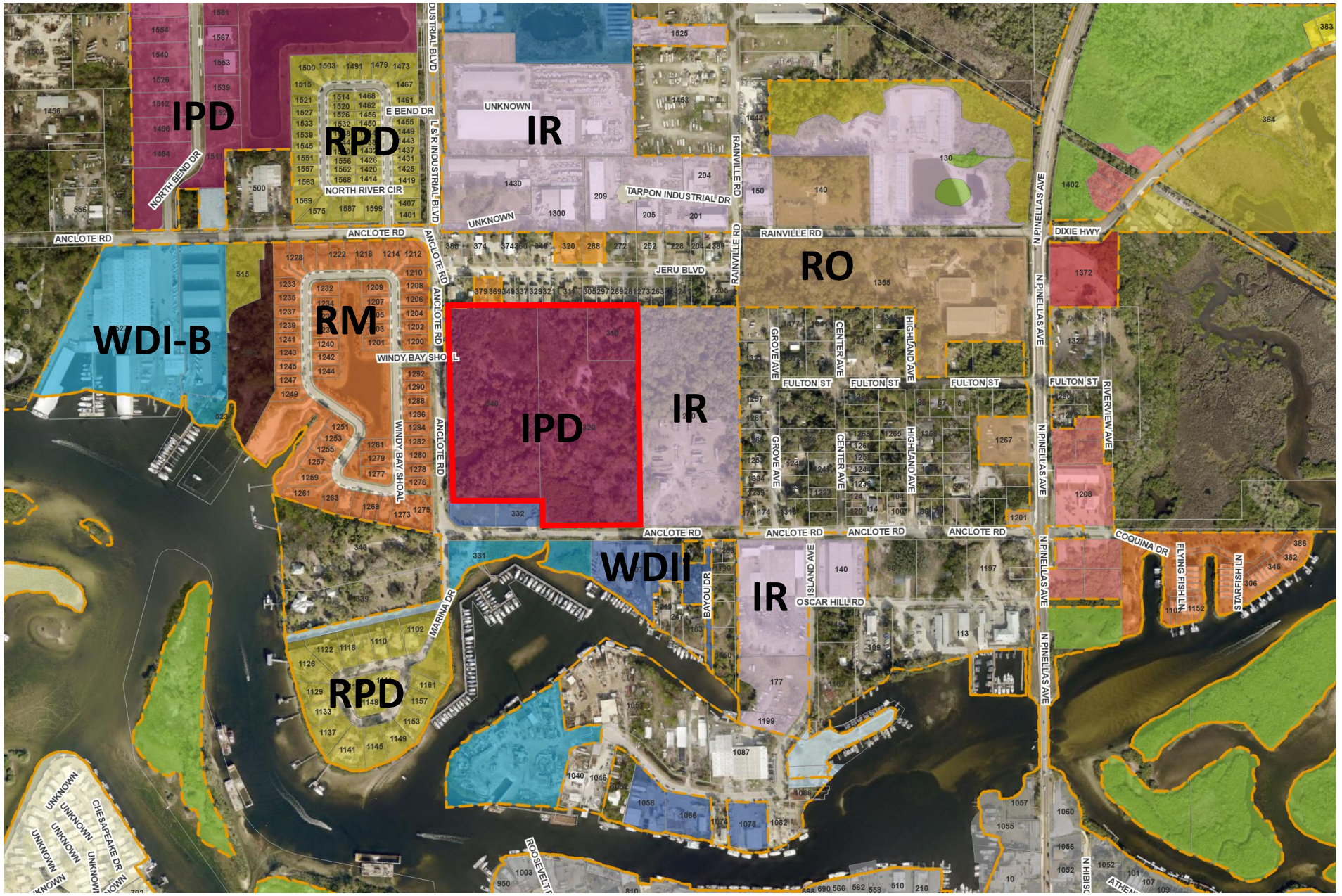

Unshaded Areas are in Unincorporated Pinellas County

CITY OF TARPON SPRINGS
PLANNING & ZONING DEPARTMENT

PLACE-BASED AREA MAP – 2045 COMPREHENSIVE PLAN

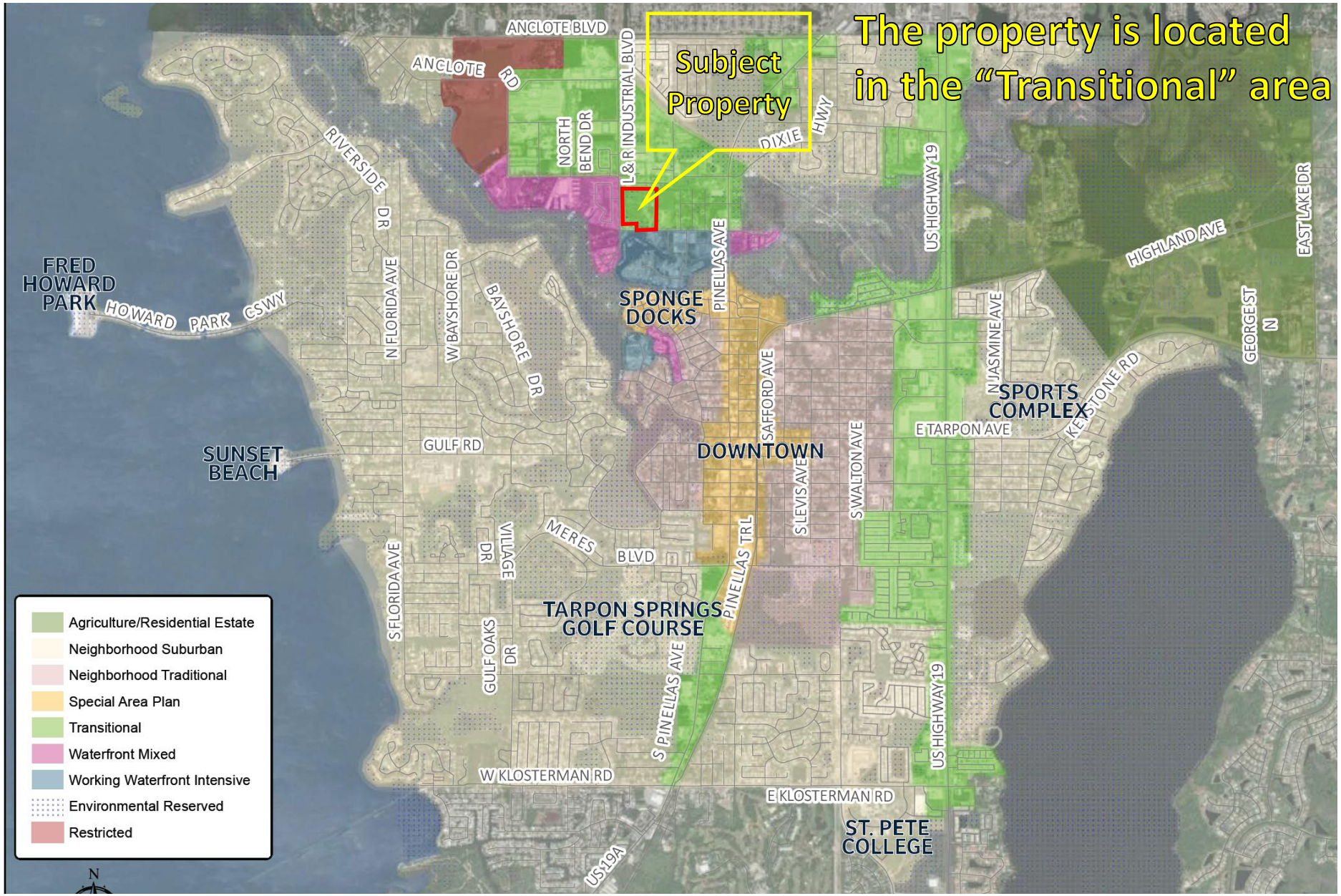

CITY OF TARPON SPRINGS
PLANNING & ZONING DEPARTMENT

SURVEY

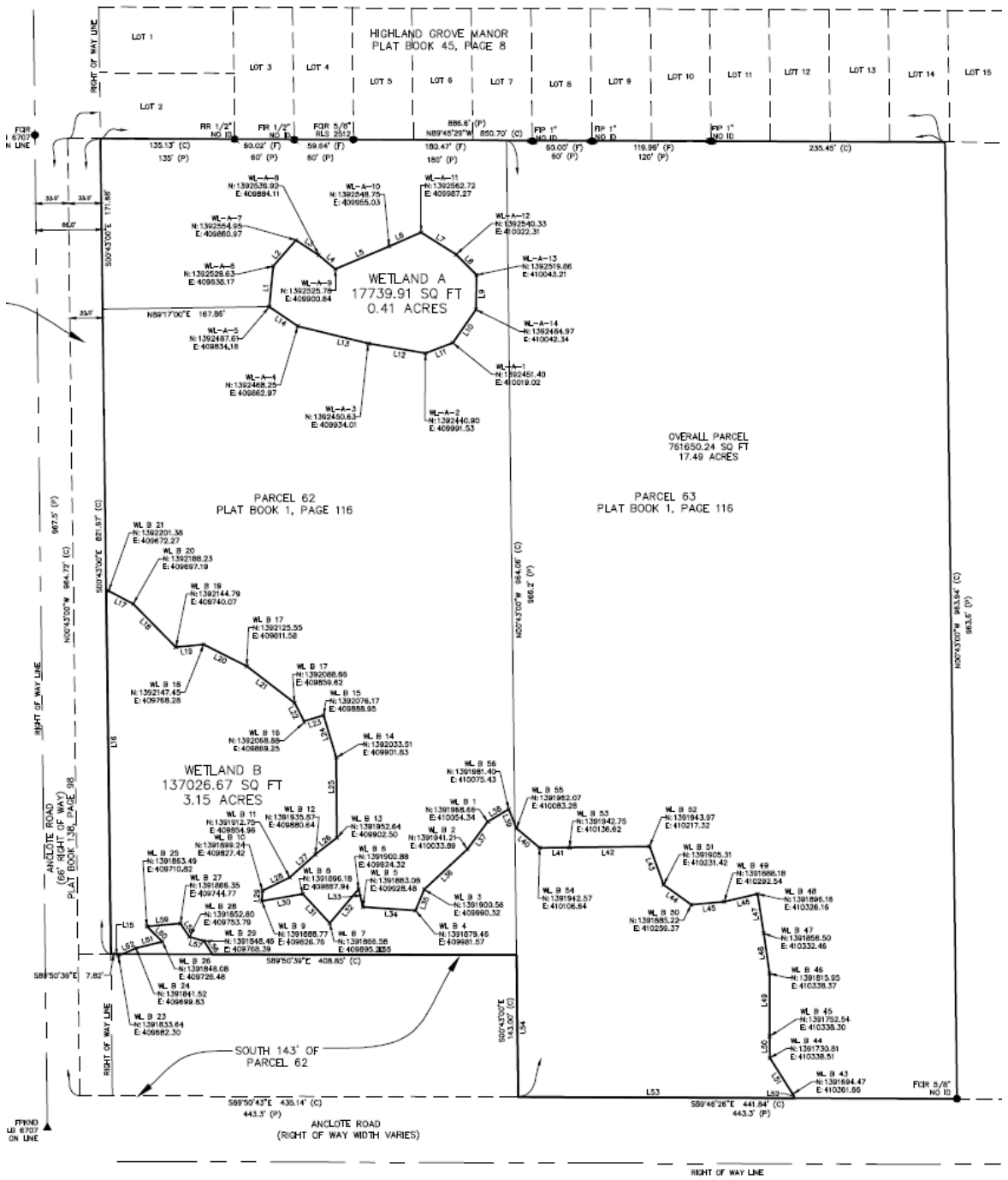

CITY OF TARPON SPRINGS
PLANNING & ZONING DEPARTMENT

SURVEY OVERLAY

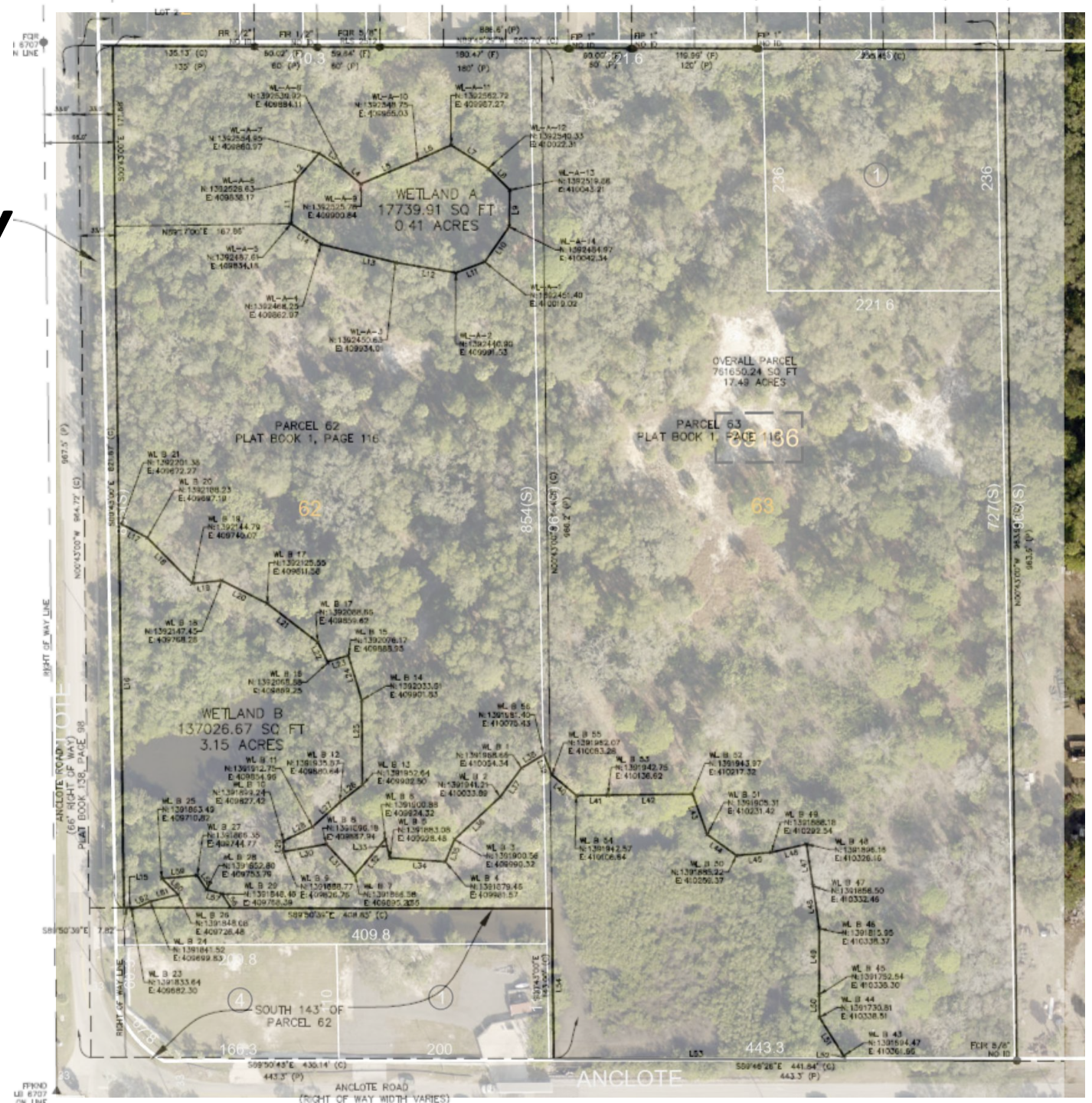

CITY OF TARPON SPRINGS
PLANNING & ZONING DEPARTMENT


OBLIQUE AERIAL PHOTO
Anclote Road
SITE
Anclote Road

REZONING HISTORY PERSPECTIVE: 1976 AND 1981

Travel Park, Industrial Restricted

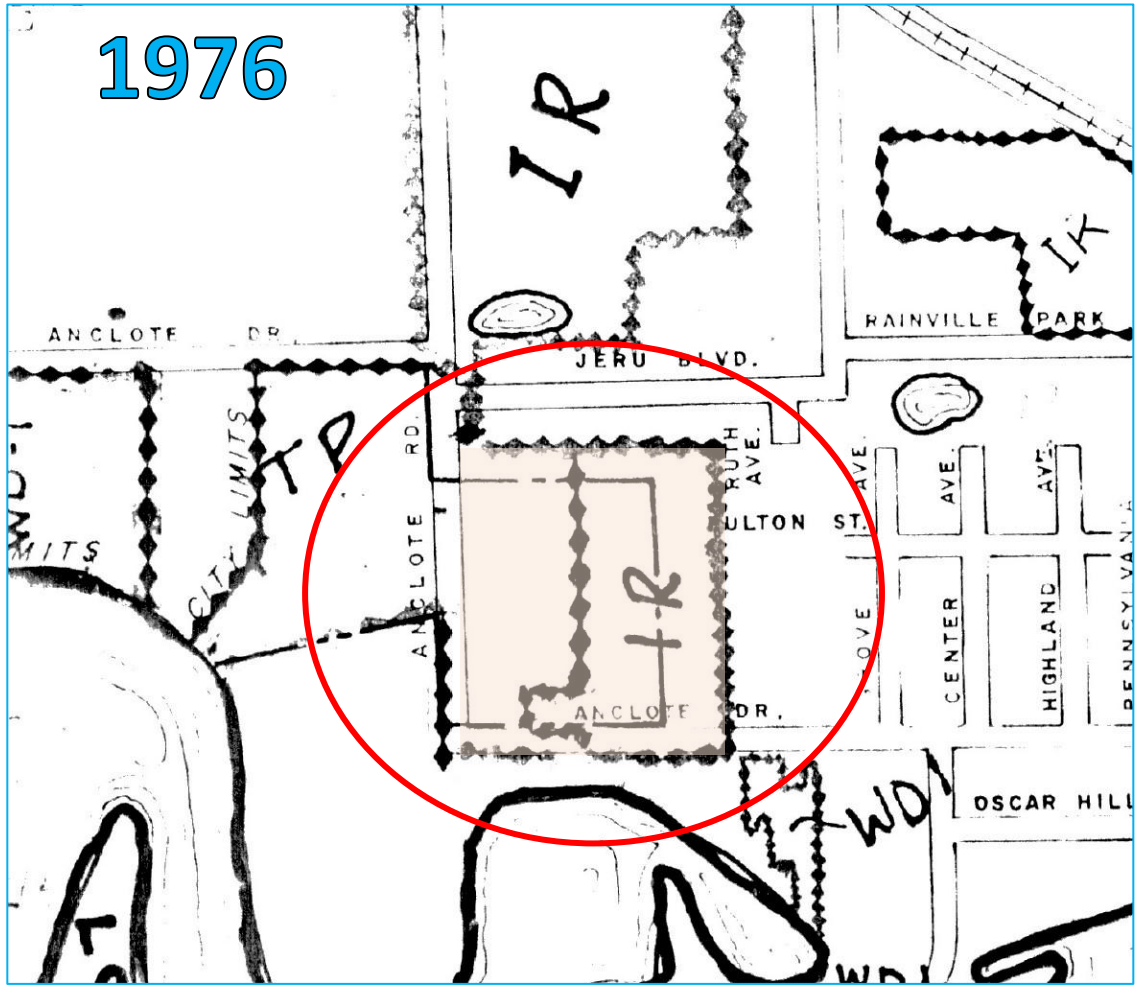

Travel Park

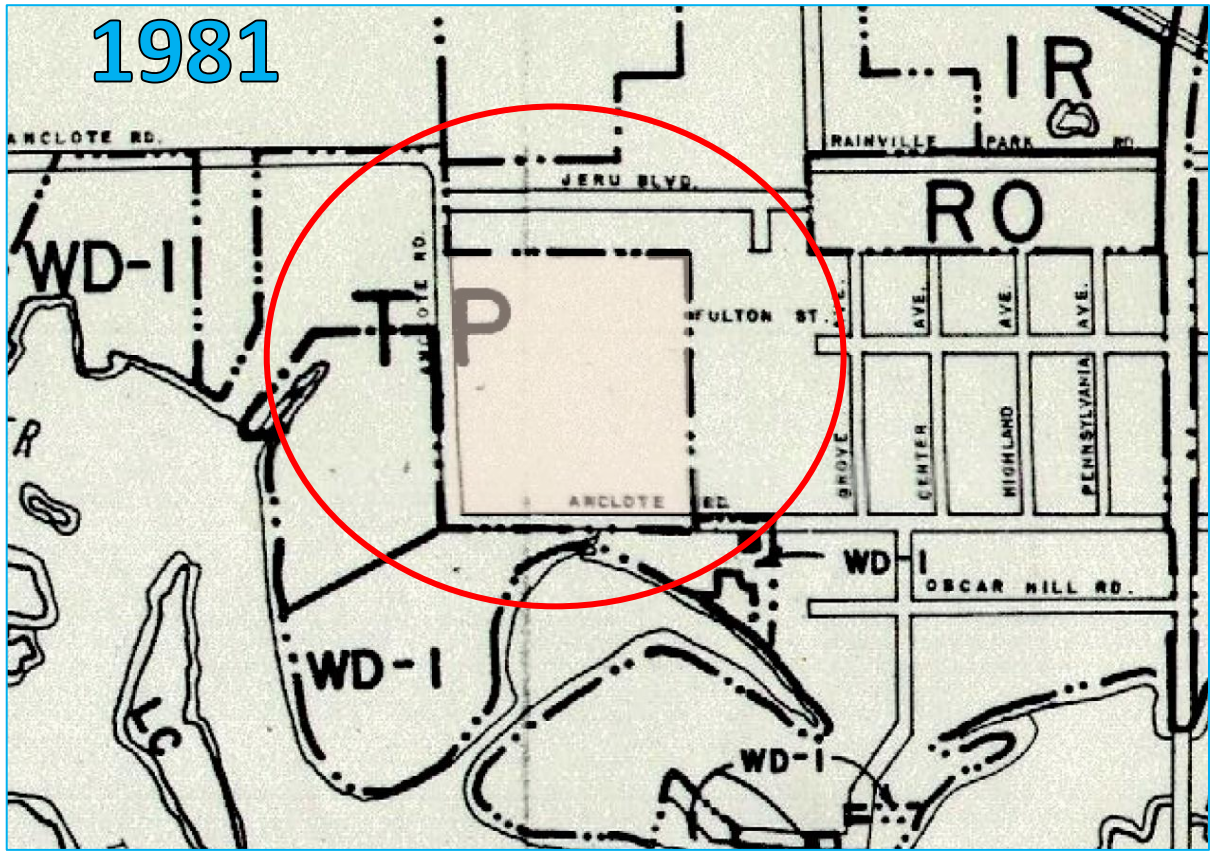

CITY OF TARPON SPRINGS
PLANNING & ZONING DEPARTMENT

REZONING HISTORY PERSPECTIVE: 1989-1990

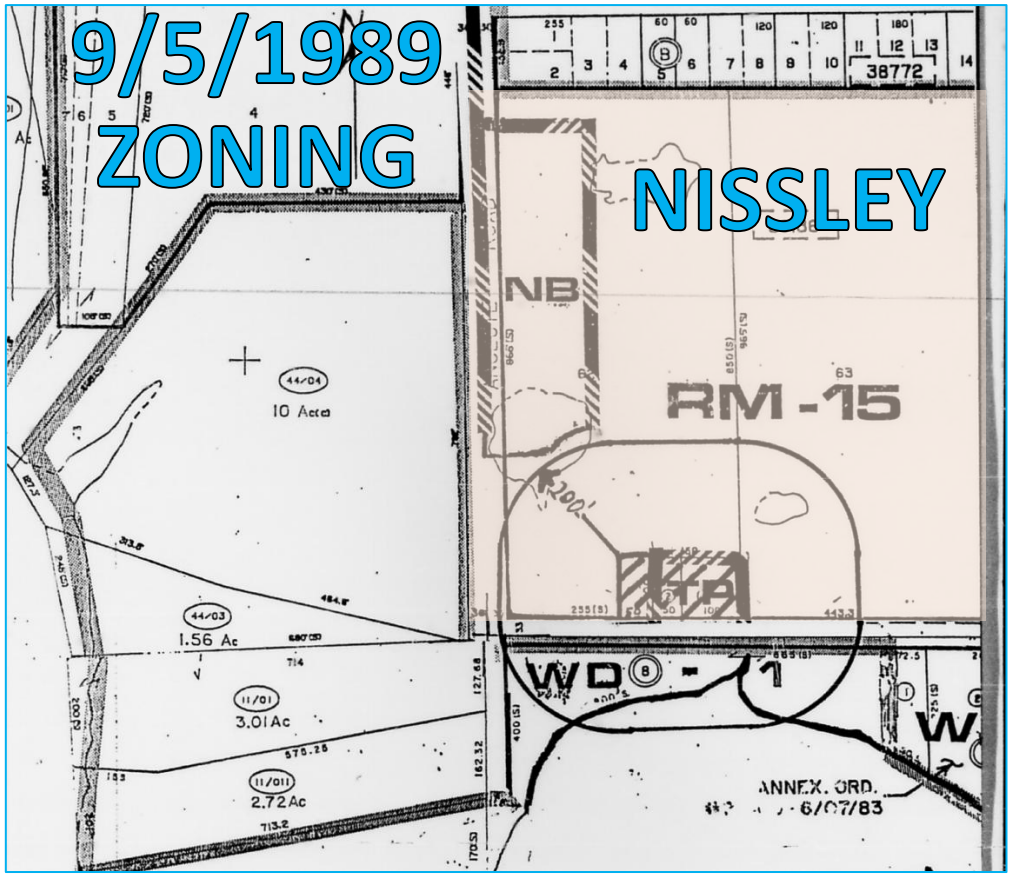

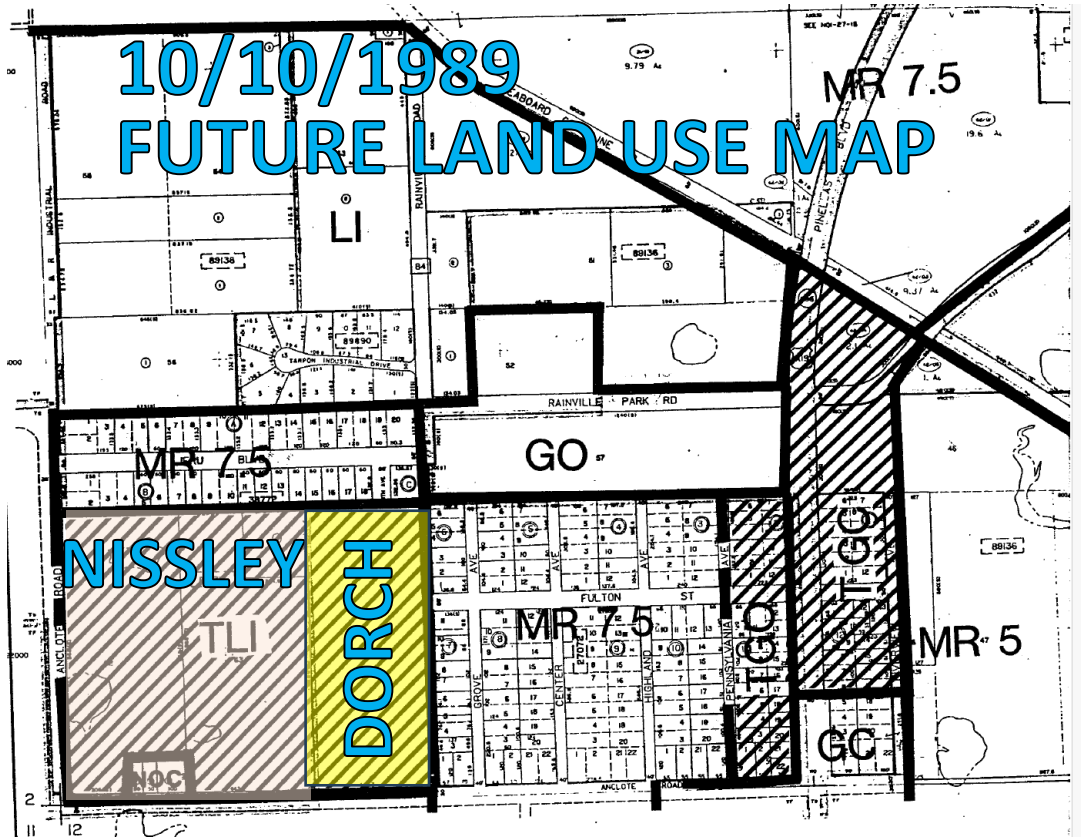

<u>September 5, 1989</u>: Ordinance 89-17: Amending the boat storage yard from Residential Multifamily (RM-15)/Travel Park to Neighborhood Business, shows RM-15 on Nissley property.

<u>October 10, 1989</u>: Ordinance 89-35: Adopting the 1989 Comprehensive Plan and Future Land Use Map with a designation of Transition Industrial (TLI) covering Nissely and Dorch properties (both vacant).

CITY OF TARPON SPRINGS
PLANNING & ZONING DEPARTMENT

REZONING HISTORY PERSPECTIVE: 1989-1990

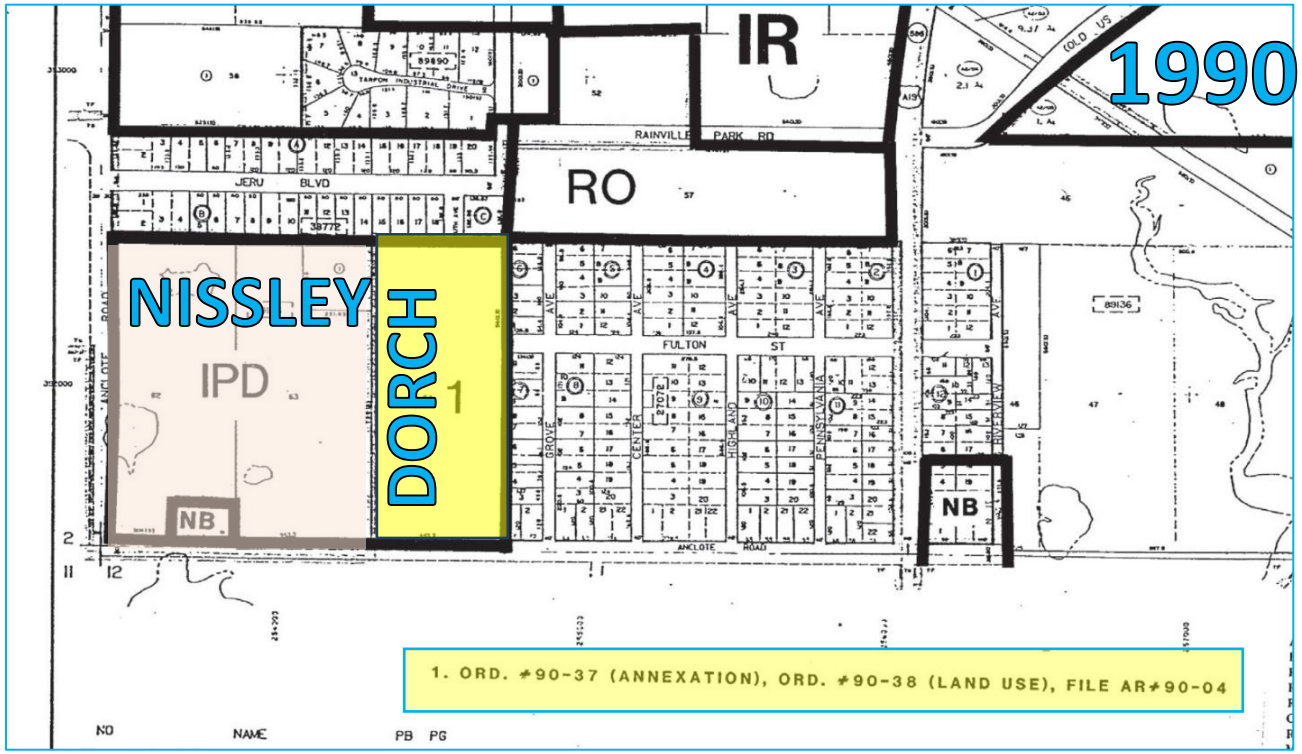

<u>May 1, 1990</u>: Ordinance 90-10: Adopting Land Development Code and zoning map showing IPD on Nissley.

<u>September 18, 1990</u>: Ordinance 90-37: Annexing the Dorch property (Adjacent to Nissley) with IPD Zoning as Vacant Land (consistent with 1989 Comprehensive Plan policies that preferred the **planned development** process for vacant lands north of the river)

CITY OF TARPON SPRINGS
PLANNING & ZONING DEPARTMENT

COMPREHENSIVE PLAN CONSISTENCY

1989 Comprehensive Plan

- Called for utilization of the Planned Development concept and specifies that it is preferred in the Transition Industrial Future Land Use Map category designation on the property.
- Pursuant to the plan policies, vacant industrial properties (including the subject property and the adjacent property) would have been placed in the IPD zoning district without necessarily having a site plan layout adopted.

2045 Comprehensive Plan

- Calls for continued protection of the City's industrial lands for primary job creation and specifies that wetland and significant habitat be protected and appropriately buffered.
- The flexibility of the planned development process is the best means for ensuring the implementation of these policies.

REVIEW CRITERIA – REZONING

1. **Comprehensive Plan Consistency**
   The proposed IR designation is not consistent with the 2045 Comprehensive Plan. The current IPD zoning is more appropriate to provide site layout flexibility, maximize protection of known features, and provide for neighborhood compatibility.

2. **Appropriate and Compatible Uses**
   While both the IR and IPD zonings generally align with the Employment Future Land Use category, the Planned Development process provides greater flexibility to address compatibility, environmental features and transportation.

3. **Provide for Efficient and Orderly Development**
   Efficient and orderly development would be compromised by a potential for increased environmental impacts and reduced opportunity to address compatibility issues.

4. **Public Facilities Capacity and Levels of Service**
   The City has the capacity and fiscal ability to serve the property. Development under either zoning is expected to be able to demonstrate compliance with Level of Service standards.

ADDITIONAL ITEMS TO NOTE:

1. **1989-1990 Actions and Comprehensive Plan guidance show that the planned development zoning designation was preferred under the Plan and shown on the 1990 map.** Staff concludes that the IPD zoning was consistent with the policy and procedures at the time.

2. **The IPD zoning is in place and does not have to be re-adopted. It provides for protections for wetlands, neighboring residential and the recognized "Transitional" character, that are consistent with the 2045 Comprehensive Plan, while providing the developer with flexibility in design through the waiver process.** A new developer would go through the planned development amendment ***process*** for uses by-right and for conditional uses but Board would have to ***re-adopt*** the IPD zoning. With respect to wetlands, note that regardless of the zoning, wetlands generally cannot be developed. The wetland setback would be 50 feet for the IPD district and 25 feet for the IR district.

4. **It is noted that neighborhood compatibility must be addressed regardless of the development review process used, since any development must be consistent with the Comprehensive Plan.** The planned development process should provide greater flexibility for addressing site layout and compatibility issues.

PRELIMINARY STAFF RECOMMENDATION

#25-28 - ***Denial*** of **Ordinance 2025-07**, Rezoning from Industrial Planned Development District (IPD) to Industrial Restricted (IR) District.

Public Notice Provided – The request was publicly noticed. One comment letter in opposition was received and is included with the agenda packet.

ORDINANCE 2025-07

AN ORDINANCE OF THE CITY OF TARPON SPRINGS, FLORIDA AMENDING THE OFFICIAL ZONING ATLAS FOR 17.49 ACRES, MORE OR LESS, OF REAL PROPERTY LOCATED AT 310, 320 AND 340 ANCLOTE ROAD, ON THE NORTH AND EAST SIDES OF ANCLOTE ROAD APPROXIMATELY 2,000 FEET WEST OF THE INTERSECTION OF ANCLOTE ROAD AND NORTH PINELLAS AVENUE, FROM INDUSTRIAL PLANNED DEVELOPMENT (IPD) DISTRICT TO, INDUSTRIAL RESTRICTED (IR) DISTRICT; PROVIDING FOR FINDINGS; AND PROVIDING AN EFFECTIVE DATE.

WHEREAS, the property owner of record of said parcel has requested to amend the Official Zoning Atlas designation from Industrial Planned Development (IPD) District to Industrial Restricted (IR) District; and

WHEREAS, the Industrial Restricted (IR) District is consistent with the property's existing Future Land Use Map categories of Employment (E) and Preservation (P), respectively; and

WHEREAS, permitted uses within the Industrial Restricted (IR) District is compatible with the surrounding and existing land uses; and

WHEREAS, the Planning and Zoning Board conducted a public hearing on this Zoning Atlas amendment Ordinance on November 17, 2025; and

WHEREAS, published legal notice of this Ordinance has been provided pursuant to the requirements of Chapter 166.041, F.S. and Section 206 of the Tarpon Springs Comprehensive Zoning and Land Development Code.

NOW, THEREFORE, BE IT ORDAINED BY THE BOARD OF COMMISSIONERS OF THE CITY OF TARPON SPRINGS, FLORIDA:

Section 1. FINDINGS

1. That the Board of Commissioners finds that this Ordinance is consistent with Chapter 163, Part II, Florida Statutes.

2. The Board of Commissioners finds that this amendment to the Industrial Restricted (IR) District is appropriate.

Section 2. ZONING ATLAS AMENDMENT

That the Official Zoning Atlas of the City of Tarpon Springs is hereby amended to Industrial Restricted (IR) for the property described as,

> Lots 62 and 63, Tampa and Tarpon Springs Land Company Subdivision, Section 1, Township 27 South, Range 15 East, as per plat thereof recorded in Plat Book 1, Page 116, Public Records of Hillsborough County, Florida, of which Pinellas County was formerly a part. Less and except the South 143 feet of Lot 62,"

Section 3. SEVERABILITY

If any section, subsection, sentence, clause or phrase of the Ordinance is determined for any reason to be illegal, invalid, or unconstitutional by a court or regulatory body of competent jurisdiction, then the offending provision shall be deemed severable, shall not affect the validity of the remaining portions hereof, and the remainder shall continue in full force and effect.

Section 4. REPEAL

All other ordinances or resolutions which conflict wholly or in part with the provisions of this ordinance, are hereby repealed effective the date this ordinance becomes effective.

Section 5. EFFECTIVE DATE

This Ordinance shall be effective upon approval in the manner provided by law.

DRAFT

CITY OF TARPON SPRINGS
PLANNING & ZONING DEPARTMENT
324 E. Pine Street, Tarpon Springs, FL 34689
(727) 942-5611 / planning@ctsfl.us

PLANNING & ZONING APPLICATION

INSTRUCTIONS
Please complete the application form fully and submit, with all supporting materials and applicable application addendums, **DIGITALLY** through the Planning and Zoning online application portal. If a project requires multiple application types, please complete the application form once and upload into each separate application project in goPost/ePlan.

Prior to proceeding to public hearing, an application must be deemed complete and all required application fees (see fee schedule on pages 5 and 6) **must be paid prior to public hearing**. Fees can be paid in person or mailed.

1. PROPERTY OWNER(S)

NAME	EMAIL	
Tarpon Springs One LLC; Thomas Scannell	tom@bgi-usa.com	
ADDRESS 7401 Stringfellow Road		
CITY St. James City	STATE FL	ZIP 33956
PHONE 561-441-1378		

2. APPLICANT(S) *(if different than owner)*

NAME	EMAIL	
ADDRESS		
CITY	STATE	ZIP
PHONE		

3. AGENT/REPRESENTATIVE *(if applicable)*

NAME	EMAIL	
Brian J Aungst	BJA@macfar.com	
ADDRESS 625 Court St Unit 200		
CITY Clearwater	STATE FL	ZIP 33756
PHONE 727-441-8966		

4. APPLICATION TYPE* *(Please select all that apply)*

General Applications

- ☐ Annexation
- ☐ Conditional Use
- ☐ Discussion Item
- ☐ Development Agreement
- ☐ Future Land Use Amendment
- ☐ Sidewalk Cafe
- ☑ Rezoning
- ☐ Site Plan/Subdivision
- ☐ Right-of-Way Vacation
- ☐ Temporary Use (Dates:_____)
- ☐ Final Plat
- ☐ Minor Plat
- ☐ Planned Development:
  - ☐ Concept
  - ☐ Preliminary
  - ☐ Final

Board of Adjustment Applications (BOA)

- ☐ Variance
- ☐ Nonconforming Lot of Record Variance
- ☐ FAR/ISR Adjustment
- ☐ Sidewalk Waiver
- ☐ After-the-Fact Variance
- ☐ De Minimis Variance

Heritage Preservation Applications (HPB)

- ☐ Certificate of Appropriateness
- ☐ Designation of Historic Property Form
- ☐ Economic Hardship Exemption Form
- ☐ Petition for Removal Form

** See Page 4 for required Application Addendums.*

5. GENERAL INFORMATION

PROJECT NAME Anclote Rd Industrial
ADDRESS/LOCATION 310,320 & 340 Anclote Rd. Tarpon Springs, FL
TAX PARCEL NUMBER(S) 01-27-15-89136-000-0631; 01-27-15-89136-000-0630; 01-27-15-89136-000-0620
LEGAL DESCRIPTION See Survey
SITE ACREAGE Upland 13.93 Wetland 3.56 Submerged 0 Total 17.49
FLOOD *(check all that apply)* ☑ Zone X ☐ Zone X Shaded ☑ Zone AE ☐ Zone VE ☐ Not in a Flood Zone Base Flood Elevation(s) (BFE): 9,10
COASTAL HIGH HAZARD AREA (CHHA) ☑ Yes, this property is located within the CHHA ☐ No, this property is not located within the CHHA

6. LAND USE & ZONING INFORMATION

CURRENT DESIGNATIONS		PROPOSED DESIGNATIONS *(if applicable)*	
LAND USE CATEGORY	ZONING CATEGORY	LAND USE CATEGORY	ZONING CATEGORY
E/P	IPD	E/P	IR

7. SUMMARY/PURPOSE OF REQUEST

Applicant Seeks to rezone the property from Industrial Planned Development to Industrial Restrictive.

8. SIGNATURE(S)/AUTHORIZATION

APPLICANT'S SIGNATURE:
The information included in and with this application is completely true and correct to the best of my knowledge. Further, it is understood that this application must be complete and accurate and the appropriate fee(s) paid prior to processing.

_____ 3-28-2025
(Applicant's Signature) *(Date)*

OWNER'S SIGNATURE*:
I authorize the filing of this application and will allow the Planning and Zoning Department staff to visit this property if necessary for the purpose of analyzing this request. Further, I will allow a public notice sign (if required) to b placed and remain on the property until the processing of the request is complete.

_____ 3-28-2025
(Owner's Signature) *(Date)*

**Not required for discussion item applications*

AGENT AUTHORIZATION:
The agent named below is authorized to provide subject matter on the application contained herein on behalf of the property owner. The agent is authorized to discuss the application with city staff verbally or in person and to appear and represent the application at any public hearing.

Brian J Aungst _____
(Agent Name, Printed) *(Date)*

_____ _____
(Agent's Signature) *(Date)*

STATE OF FLORIDA)
COUNTY OF PINELLAS Lee)

The foregoing instrument was acknowledged before me by means of (✓) physical presence or ( ) Online notarization, this 28 day of March, A.D., 2025 by Thomas Scannell (only), who is personally known to me or who has produced _____ as identification and who did (did not) take an oath.

NOTARY PUBLIC
Name: Elsie Stearns
Signature: _____
Stamp:

ELSIE G. STEARNS
MY COMMISSION # HH 226927
EXPIRES: June 9, 2026

CITY OF TARPON SPRINGS
PLANNING & ZONING DEPARTMENT
324 E. Pine Street, Tarpon Springs, FL 34689
(727) 942-5611 / planning@ctsfl.us

APPLICATION ADDENDUMS CHECKLIST

In addition to providing the completed application, please submit the required addendums as outlined below:

ANNEXATION

☐ General Application Checklist

CONDITIONAL USE

☐ General Application Checklist
☐ Certificate of Concurrency Form
☐ Short Term Rental/Tourist Home Form, if applicable
☐ Alcoholic Beverage Form, if applicable

DISCUSSION ITEM

☐ General Application Checklist

DEVELOPMENT AGREEMENT

☐ Development Agreement Checklist

FUTURE LAND USE AMENDMENT

☐ General Application Checklist
☐ Certificate of Concurrency Form

REZONING

☐ General Application Checklist
☐ Certificate of Concurrency Form

SITE PLAN/SUBDIVISION

☐ General Application Checklist
☐ Site Plan Application Checklist
☐ Certificate of Concurrency Form
☐ Public Art Form

RIGHT-OF-WAY VACATION

☐ General Application Checklist
☐ Letters of No Objection Checklist

FINAL PLAT

☐ Final Plat Application Checklist

MINOR PLAT

☐ General Application Checklist

PLANNED DEVELOPMENT

☐ General Application Checklist
☐ Planned Development Application Checklist
☐ Certificate of Concurrency Form
☐ Public Art Form

BOARD OF ADJUSTMENT (BOA) APPLICATIONS

☐ General Application Checklist
☐ Variance Application Form, if applicable
☐ Nonconforming Lot Application Form, if applicable
☐ FAR/ISR Application Form, if applicable
☐ Sidewalk Waiver Form, if applicable
☐ After-the-Fact Variance Application Form, if applicable
☐ De Minimis Variance Form, if applicable

HERITAGE PRESERVATOPM BOARD (HPB) APPLICATIONS

☐ General Application Checklist
☐ Certificate of Appropriateness Form
☐ Designation of Historic Property Form
☐ Economic Hardship Exemption Form
☐ Petition for Designation Removal Form

SIDEWALK CAFE

☐ General Application Checklist
☐ Sidewalk Café Form, if applicable

CITY OF TARPON SPRINGS
PLANNING & ZONING DEPARTMENT
324 E. Pine Street, Tarpon Springs, FL 34689
(727) 942-5611 / planning@ctsfl.us

The following tables provide specific fees for drainage/stormwater and utility reviews for planned development and site plan applications. These fees are in addition to the application fees provided on the previous page.

DRAINAGE/STORMWATER REVIEW FEES

Application Type	Initial Submittal	2nd Submittal	Each Additional Submittal
Site Plan Applications			
Non-Residential	$675.00	No Cost	$350.00
Single-Family *(Detached, Attached, & Semi-Detached)*			
1 – 50 Lots	$1,500.00	No Cost	$500.00
Over 50 Lots	$1,750.00	No Cost	$600.00
Multi-Family	$600.00/Building	No Cost	$300.00/Building
Commercial	$2,000.00	No Cost	$1,000.00
Industrial	$3,000.00	No Cost	$1,500.00
Planned Development Applications			
Preliminary Plan *(Residential)*			
1 – 50 Lots	$500.00	No Cost	$200.00
Over 50 Lots	$750.00	No Cost	$300.00
Preliminary Plan *(Multi-Family)*	$600.00/Building	No Cost	$200.00/Building
Preliminary Plan *(Commercial)*	$1,000.00	No Cost	$500.00
Preliminary Plan *(Industrial)*	$1,500.00	No Cost	$750.00
Final Plan *(Residential – Single-Family Detached, Attached, Semi-Detached)*			
1 – 50 Lots	$1,500.00	No Cost	$500.00
Over 50 Lots	$1,750.00	No Cost	$600.00
Final Plan *(Multi-Family)*	$600/Building	No Cost	$300/Building
Final Plan *(Commercial)*	$2,000.00	No Cost	$1,000.00
Final Plan *(Industrial)*	$3,000.00	No Cost	$1,500.00
All Other Review Services	100% of Actual Costs		

UTILITY REVIEW FEES

Application Type	Initial Submittal	2nd Submittal	Each Additional Submittal
Site Plan Applications			
Preliminary/Final Planned Development	$250.00	No Cost	$250.00
Site Plan	$250.00	No Cost	$250.00
Downstream Analysis *(as necessary)*	100% of Actual Costs		
All Other Review Services	100% of Actual Costs		

CITY OF TARPON SPRINGS
PLANNING & ZONING DEPARTMENT
324 E. Pine Street, Tarpon Springs, FL 34689
(727) 942-5611 / planning@ctsfl.us

PLANNING APPLICATION FEE SCHEDULE

Type of Application	Application Fees	Additional Fees
General Applications		
Annexation	$0	$500.00 Public Notice Fee
Conditional Use	$500.00	$150.00 Public Notice Fee
Discussion Item	$0	-
Development Agreement		
Request to Negotiate	$250.00	-
Development Proposal	$2,500.00	-
Agreement Modification	$1,000.00	-
Agreement Extension	$250.00	-
Future Land Use Amendment	$750.00	$525.00 Public Notice Fee
Rezoning	$750.00	$525.00 Public Notice Fee
Future Land Use Amendment & Rezoning	$1,250.00	$525.00 Public Notice Fee
Site Plan/Subdivision		
0 – 5 Acres	$500.00	See Stormwater/Utility Fee Tables
5.01 – 10 Acres	$750.00	See Stormwater/Utility Fee Tables
10.01 – 15 Acres	$1,000.00	See Stormwater/Utility Fee Tables
15.01 – 20 Acres	$1,500.00	See Stormwater/Utility Fee Tables
20.01 Acres or More	$2,000.00	See Stormwater/Utility Fee Tables
Site Plan Extension	$100.00	-
Right-of-Way Vacation	50% of Appraised Value	-
Temporary Use	$100.00	-
Mobile Food Vendor	$25.00	-
Final Plat	$750.00	Surveyor Review Fee Billed to Applicant
Minor Plat	$250.00	-
Planned Development		
Conceptual Plan	$250.00	-
Preliminary Plan	$750.00	$500.00 Public Notice Fee See Stormwater/Utility Fee Tables
Final Plan	$500.00	$500.00 Public Notice Fee See Stormwater/Utility Fee Tables
Minor Modifications	$250.00 each	See Stormwater/Utility Fee Tables
Major Modifications	$750.00	$500.00 Public Notice Fee See Stormwater/Utility Fee Tables
Time Extension	$100.00	-
Sidewalk Café	$250.00	-
Board of Adjustment Applications		
Variance	$250.00	$150.00 Public Notice Fee
Sidewalk Waiver	$250.00	$150.00 Public Notice Fee
De Minimis Variance	$50.00	$0.77 Per Public Notice Letter (Adjacent Properties)
Appeal of Administrative Decision	$250.00	$150.00 Public Notice Fee
Hertiage Preservation Board Applications		
Certificate of Appropriateness	$50.00	$75.00 Public Notice Fee
Designation	$250.00	$75.00 Public Notice Fee
Economic Hardship	$50.00	$75.00 Public Notice Fee

JUSTIFICATION NARRATIVE
REZONING OF 310, 320 & 340 ANCLOTE ROAD

The owner ("*Owner*") of 310, 320 and 340 Anclote Road (collectively, the "*Property*") is requesting a rezoning of the Property from Industrial Planned Development ("*IPD*") to Industrial Restricted ("*IR*"). The Property was given a zoning designation of IPD upon the adoption of the current zoning map under Ordinance No. 1990-10, but that was an area-wide adoption and City staff has confirmed there is no record of there ever being a site plan which would govern the IPD zoning designation for the Property. For over a decade the Owner has marketed the Property for sale, but the inability to provide prospective purchasers of the Property with a definitive site plan under the IPD zoning has made it extremely difficult to keep buyers interested in the Property.

Approval of this application for rezoning from IPD to IR would not only provide certainty for prospective purchasers, but it would expand the permitted uses available as-of-right on the Property and would better conform with the surrounding uses. For example, the property located directly adjacent to the east, 240 Anclote Road, was similarly zoned IPD in 1990 (Ordinance No. 1990-37) but has since rezoned to IR. The Property also has a history of different uses prior to the 1990 rezoning to IPD and it is the Owner's hope that approval of this rezoning request will generate interest in the Property from buyers who are looking to be a part of the fabric of the historic Tarpon Springs community.

I#: 2006086587 BK: 14976 PG: 9, 03/08/2006 at 02:17 PM, RECORDING 2 PAGES $18.50 D DOC STAMP COLLECTION $28000.00 KEN BURKE, CLERK OF COURT PINELLAS COUNTY, FL BY DEPUTY CLERK: CLKPR13

Prepared by and return to:

Carter & Thomas Law Offices, LLP
1515 N. Federal Highway, Suite
Boca Raton, FL 33432
561-368-7474
File Number: **7843.01**

[Space Above This Line For Recording Data]

Trustee's Deed

This Trustee's Deed made this 2nd day of **March, 2006** between **Eleanore S. Nissley, a widow, individually, and as Trustee of a testimentary trust created under the Will of Warren W. Nissley, deceased, dated October 30, 1993** whose post office address is **145 Phelps Road, Ridgewood, NJ**, grantor, and **Tarpon Springs One, LLC, a Florida limited liability company** whose post office address is **9771 87th Place South, Boynton Beach, FL 33437**, grantee:

(Whenever used herein the terms grantor and grantee include all the parties to this instrument and the heirs, legal representatives, and assigns of individuals, and the successors and assigns of corporations, trusts and trustees)

Witnesseth, that said grantor, for and in consideration of the sum TEN AND NO/100 DOLLARS ($10.00) and other good and valuable considerations to said grantor in hand paid by said grantee, the receipt whereof is hereby acknowledged, has granted, bargained, and sold to the said grantee, and grantees heirs and assigns forever, the following described land, situate, lying and being in **Pinellas County**, Florida, to-wit:

Lots 62 and 63, Tampa and Tarpon Springs Land Company Subdivision, Section 1, Township 27 South, Range 15 East, as per plat thereof recorded in Plat Book 1, Page 116, Public Records of Hillsborough County, Florida, of which Pinellas County was formerly a part.
Less and except the South 143 feet of Lot 62.

Parcel ID # 01-27-15-89136-000-0620
Parcel ID # 01-27-15-89136-000-0630
Parcel ID # 01-27-15-89136-000-0631

Subject to taxes for 2006 and subsequent years; covenants, conditions, restrictions, easements, reservations and limitations of record, if any.

Grantor warrants that at the time of this conveyance, the subject property is not the Grantor's homestead within the meaning set forth in the constitution of the state of Florida, nor is it contiguous to or a part of homestead property. Grantor's residence and homestead address is 145 Phelps Road, Ridgewood, NJ.

Together with all the tenements, hereditaments and appurtenances thereto belonging or in anywise appertaining.

To Have and to Hold, the same in fee simple forever.

And the grantor hereby covenants with said grantee that the grantor is lawfully seized of said land in fee simple; that the grantor has good right and lawful authority to sell and convey said land; that the grantor hereby fully warrants the title to said land and will defend the same against the lawful claims of all persons claiming by, through or under grantors.

In Witness Whereof, grantor has hereunto set grantor's hand and seal the day and year first above written.

DoubleTime®

Signed, sealed and delivered in our presence:

Witness Name: Dariusz M. Wroniski

Witness Name: Michele Verost

Eleanore S. Nissley, Individually and as Trustee

State of New Jersey
County of Bergen

The foregoing instrument was acknowledged before me this 1st day of March, 2006 by Eleanore S. Nissley, a widow, individually, and as Trustee of a testimentary trust created under the Will of Warren W. Nissley, deceased, dated October 30, 1993, who [_] is personally known or [X] has produced a driver's license as identification.

[Notary Seal]

Notary Public

Printed Name: _____

My Commission Expires: _____

CYNTHIA A HARRSCH
Notary Public
State of New Jersey
My Commission Expires Oct 30, 2007

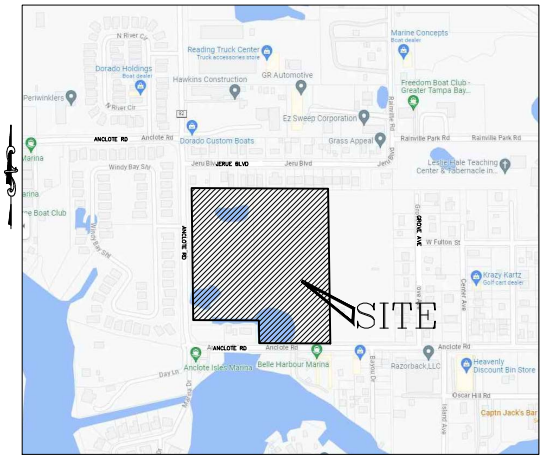

SITE MAP
NOT TO SCALE

PROPERTY ADDRESS= ANCLOTE RD, TARPON SPRINGS, FLORIDA, 34689
SURVEYED AREA =761650.24 SQ FT SQUARE FEET OR 17.49 ACRES, MORE OR LESS

LEGEND

CMF (CONCRETE MONUMENT FOUND) 4", NUMBER DENOTED			FOUND CHISEL X
CMS (4X4 CONCRETE MONUMENT (FDOT SET)			FOUND DRILL HOLE
5/8" CAPPED IRON ROD LB #7832 SET			BENCH MARK
CMF (CAPPED IRON ROD) SIZE AND NUMBER DENOTED			TRAVERSE POINT
PF (IRON PIPE) FOUND SIZE AND NUMBER DENOTED			RAILROAD SPIKE FOUND
NAIL & DISK FOUND (NUMBER DENOTED)			EXISTING ELEVATION
NAIL & DISK SET (UNLESS)			

BC	BACK OF CURB	(P)	PLAT DATA
BM	BENCHMARK	P.B.	PLAT BOOK
(C)	CALCULATED DATA	PC	POINT OF CURVATURE
C.B.	CHORD BEARING	POC	POINT OF COMMENCEMENT
C.L.	CENTERLINE	POB	POINT OF BEGINNING
CONC.	CONCRETE	POC	POINT OF COMMENCEMENT
DELTA		POL	POINT ON LINE
(D)	DEED OR DESCRIPTION	PRM	PERMANENT REFERENCE MONUMENT
EP	EDGE OF PAVEMENT	PT	POINT OF TANGENCY
(F)	FIELD DATA	R	RADIUS
FL	FLOWLINE	(R)	RADIAL LINE
L	ARC LENGTH	R/W	RIGHT OF WAY
(NR)	NON-RADIAL LINE	O.R.	OFFICIAL RECORDS INSTRUMENT
O.R.	OFFICIAL RECORDS BOOK	ELEV.	ELEVATION
R.C.P.	REINFORCED CONC. PIPE		
P.V.C.	POLYVINYL CHLORIDE		

INTERSTATE		CONCRETE POWER POLE	
STATE ROAD		UTILITY POLE	
US HIGHWAY		OVERHEAD UTILITIES	
SIGN		ANCHOR WIRE	
SIGNS		FLIGHT POLE	
PARKING SPACES			
HANDICAP SPACE			

MONITOR WELL		TELEPHONE PEDESTAL	OUTLET CONTROL STRUCTURE
WATER METER		ELECTRIC RISER	GUARD INLET
WATER SERVICE		ELECTRIC BOX	GRATE INLET
BLOWOFF		TRANSFORMER	STORM MANHOLE
WELL		CABLE PEDESTAL	SANITARY MANHOLE
FIRE HYDRANT		GAS RISER	SEWER SERVICE
GATE VALVE		GAS METER	LIFT STATION
GAS LINE		CABLE TV RISER	IRRIGATION SERVICE
CABLE LINE		SOLAR PANEL	BACK FLOW PREVENTOR
		CABLE TV BOX	CLEANOUT
			AIR RELIEVE VALVE

DESCRIPTION:

LOTS 62 AND 63, TAMPA AND TARPON SPRINGS LAND COMPANY SUBDIVISION, SECTION 1, TOWNSHIP 27 SOUTH, RANGE 15 EAST, AS PER PLAT THEREOF RECORDED IN PLAT BOOK 1, PAGE 116, PUBLIC RECORDS OF HILLSBOROUGH COUNTY, FLORIDA, OF WHICH PINELLAS COUNTY WAS FORMERLY A PART.
LESS AND EXCEPT THE SOUTH 143 FEET OF LOT 62.

SURVEYORS NOTE:

1. THERE APPEARS TO BE A 33' RIGHT OF WAY DEDICATION AS SHOWN ON TARPON KEY, PLAT BOOK 138, PAGE 98. THE PLAT REFERENCES A "33' R/W PER (PROPERTY APPRAISERS) MAP FORMAL R/W DEDICATION NOT PROVIDED". A FORMAL RIGHT OF WAY DEDICATION WAS NOT PROVIDED TO OR PURSUED BY THE SURVEYOR FOR THE PURPOSES OF THIS SURVEY.

NOTES:

1. BEARINGS ARE BASED ON AN ASSUMED MERIDIAN OF S.00°43'00"E. BEING THE EAST RIGHT OF WAY LINE OF ANCLOTE ROAD. (ASSUMED).

2. THE RELATIVE ERROR OF CLOSURE OF THIS SURVEY IS WITHIN THE ACCURACY ALLOWED FOR THIS TYPE OF SURVEY.

3. THE SURVEY DEPICTED HEREON IS NOT INTENDED TO SHOW THE LOCATION OR EXISTENCE OF ANY WETLAND OR JURISDICTIONAL AREAS.

4. RE-USE OF THIS SURVEY FOR THE PURPOSES OTHER THAN WHICH IT WAS INTENDED WITHOUT WRITTEN VERIFICATION, WILL BE AT THE RE-USERS SOLE RISK AND WITHOUT LIABILITY TO THE SURVEYOR. NOTHING HEREIN SHALL BE CONSTRUED TO GIVE ANY RIGHTS OR BENEFITS TO ANYONE OTHER THAN THOSE CERTIFIED TO.

5. THE PROPERTY SHOWN HEREON LIES WITHIN FLOOD ZONES "AE" & "X", AS PER F.I.R.M. PANEL NO. 12103C0017 H DATED 08/24/20201, (SUBJECT TO VERIFICATION) (INFORMATION SCALED FROM FEMA MAP.)

6. UTILITIES SHOWN HEREON ARE PER ABOVE GROUND EVIDENCE ONLY. NO EXCAVATION WAS PERFORMED TO VERIFY THE LOCATION OR EXISTENCE OF ANY UNDERGROUND IMPROVEMENTS, STRUCTURES OR FOUNDATIONS. THIS DOCUMENT SHOULD NOT BE RELIED UPON FOR EXCAVATION OR CRITICAL DESIGN FUNCTIONS WITHOUT FIELD VERIFICATION OF UNDERGROUND UTILITY LOCATIONS. UTILITIES OTHER THAN THOSE SHOWN HEREON MAY EXIST.

7. ELEVATIONS IF SHOWN HEREON ARE REFERENCED TO THE NORTH AMERICAN VERTICAL DATUM OF 1988 (NAVD88).

8. THIS SURVEY WAS PERFORMED WITH THE BENEFIT OF CHICAGO TITLE INSURANCE COMPANY COMMITMENT, COMMITMENT NUMBER 10912291, DATED DATED 03/06/2023 AND LAST REVISED 03/15/2023. NO OTHER INFORMATION REGARDING EASEMENTS RIGHTS-OF-WAY, AND/OR OWNERSHIP WERE PROVIDED TO OR PURSUED BY THE UNDERSIGNED. ENCUMBRANCES OTHER THAN SHOWN HEREON MAY EXIST.

9. A MEAN HIGH WATER SURVEY WAS NOT PERFORMED FOR THE PURPOSE OF THIS SURVEY.

10. OWNERSHIP OF FENCES, IF ANY, WERE NOT DETERMINED AS APART OF THIS SURVEY.

11. BUILDING TIES TO THE PROPERTY LINE SHOWN HEREON HAVE BEEN FIELD VERIFIED. BUILDING SETBACK INFORMATION REQUIRED BY SUBJECT COUNTY LAND DEVELOPMENT CODE WAS PROVIDED BY CLIENT AND HAS NOT BEEN CONFIRMED OR VERIFIED BY THIS OFFICE.

12. THE CLIENT AGREES TO LIMIT THE SURVEYOR'S LIABILITY TO THE CLIENT ON THE PROJECT DUE TO ANY CLAIM OF ANY NATURE WHATSOEVER ARISING OUT OF OR RELATING TO THIS SURVEY, SUCH AS THE TOTAL AGGREGATE LIABILITY OF THE SURVEYOR TO ALL THOSE NAMED SHALL NOT EXCEED THE SURVEYOR'S TOTAL FEE FOR SERVICES RENDERED.

CERTIFIED TO:
SOUTH WEST FLORIDA WATER MANAGEMENT DISTRICT

SPECIFIC PURPOSE SURVEY

OF PARCEL LYING IN SECTION 1, TOWNSHIP 27 SOUTH, RANGE 15 EAST, PINELLAS COUNTY, FLORIDA

#	REVISION	DATE	BY
1	REVISED WETLANDS	07/06/2023	DC

ATWELL
CERTIFICATE OF AUTHORIZATION LB 0007932
3803 TAMPA ROAD, SUITE 805, OLDSMAR, FLORIDA 34677
(813) 514-1788 WWW.ATWELL-USA.COM

Scale: 1"= NONE | Drawn by: AG | FB/PG: NONE | JOB: 23001469 | DATE: 04/28/2023

NOT VALID WITHOUT THE ORIGINAL SIGNATURE AND SEAL OF A FLORIDA LICENSED SURVEYOR AND MAPPER
THIS SURVEY PREPARING ON THIS DOCUMENT WAS AUTHORIZED BY DALTON R. CROSS, P.S.M.

DALTON R. CROSS, P.S.M. DATE OF SURVEY 04/28/2023
FLORIDA CERTIFICATE NO. 7329

SHEET# 1 OF 2

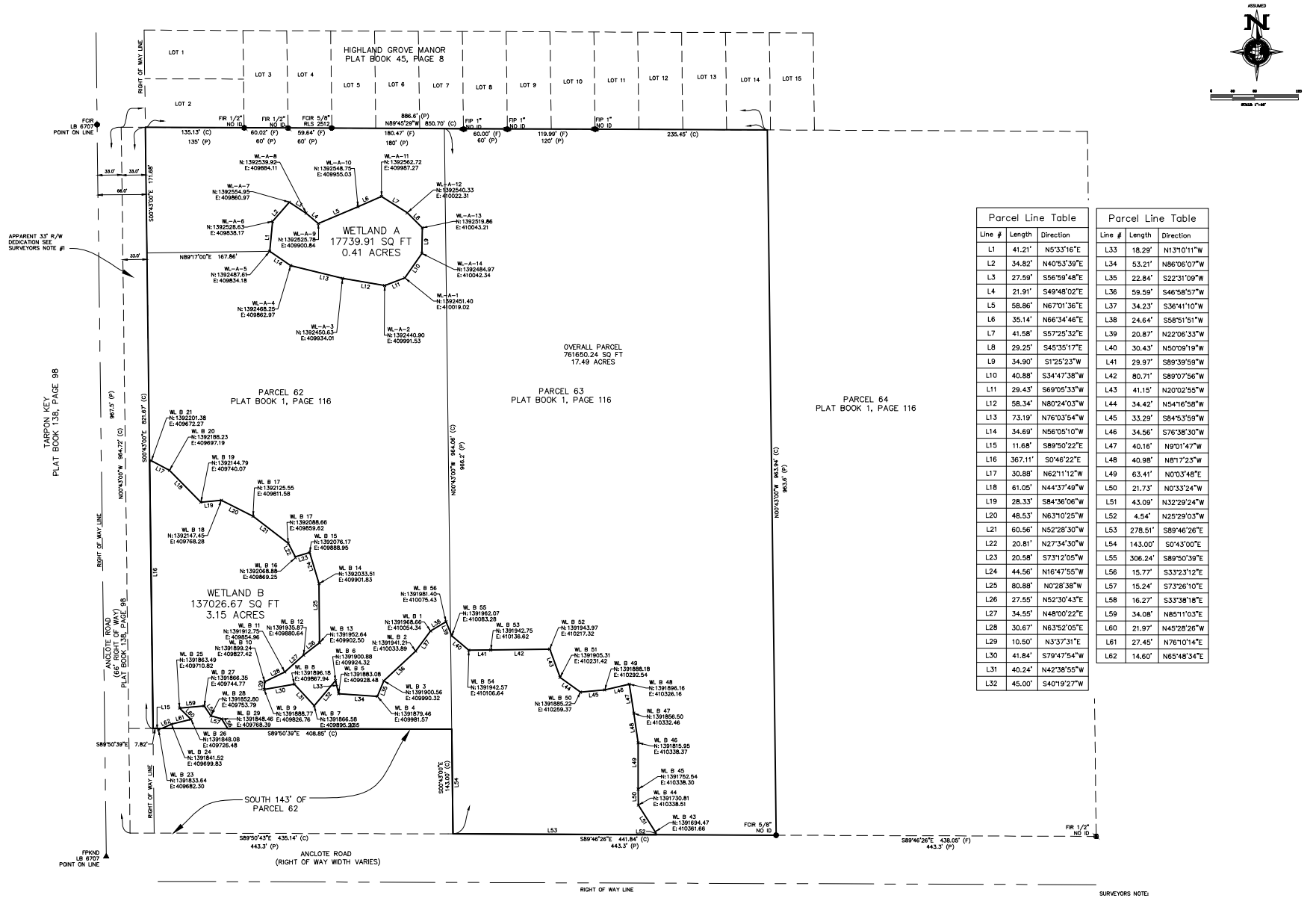

Parcel Line Table		
Line #	Length	Direction
L1	41.21'	N53°33'16"E
L2	34.82'	N40°53'39"E
L3	27.59'	S56°59'48"E
L4	21.91'	S49°48'02"E
L5	58.86'	N67°01'36"E
L6	35.14'	N66°34'46"E
L7	41.58'	S57°25'32"E
L8	29.25'	S45°35'17"E
L9	34.90'	S1°25'23"W
L10	40.88'	S34°47'38"W
L11	29.43'	S69°05'33"W
L12	58.34'	N80°24'03"W
L13	73.19'	N76°03'54"W
L14	34.69'	N56°05'10"W
L15	11.68'	S89°50'22"E
L16	367.11'	S0°46'22"E
L17	30.88'	N62°11'12"W
L18	61.05'	N44°37'49"W
L19	28.33'	S84°36'06"W
L20	48.53'	N63°10'25"W
L21	60.56'	N52°28'30"W
L22	20.81'	N27°34'30"W
L23	20.58'	S73°12'05"W
L24	44.56'	N16°47'55"W
L25	80.88'	N0°28'38"W
L26	27.55'	N52°30'43"E
L27	34.55'	N48°00'22"E
L28	30.67'	N63°52'05"E
L29	10.50'	N3°37'31"E
L30	41.84'	S79°47'54"W
L31	40.24'	N42°38'55"W
L32	45.00'	S40°19'27"W

Parcel Line Table		
Line #	Length	Direction
L33	18.29'	N13°10'11"W
L34	53.21'	N86°06'07"W
L35	22.84'	S22°31'09"W
L36	59.59'	S46°58'57"W
L37	34.23'	S36°41'10"W
L38	24.64'	S58°51'51"W
L39	20.87'	N22°06'33"W
L40	30.43'	N50°09'19"W
L41	29.97'	S89°39'59"W
L42	80.71'	S89°07'56"W
L43	41.15'	N20°02'55"W
L44	34.42'	N54°16'58"W
L45	33.29'	S84°53'59"W
L46	34.56'	S76°38'30"W
L47	40.16'	N9°01'47"W
L48	40.98'	N8°17'23"W
L49	63.41'	N0°03'48"E
L50	21.73'	N0°33'24"W
L51	43.09'	N32°29'24"W
L52	4.54'	N25°29'03"W
L53	278.51'	S89°46'26"E
L54	143.00'	S0°43'00"E
L55	306.24'	S89°50'39"E
L56	15.77'	S33°23'12"E
L57	15.24'	S73°26'10"E
L58	16.27'	S33°38'18"E
L59	34.08'	N85°11'03"E
L60	21.97'	N45°28'26"W
L61	27.45'	N76°10'14"E
L62	14.60'	N65°48'34"E

SURVEYORS NOTES:

1. THERE APPEARS TO BE A 33' RIGHT OF WAY DEDICATION AS SHOWN ON TARPON KEY, PLAT BOOK 138, PAGE 98. THE PLAT REFERENCES A "33' R/W PER (PROPERTY APPRAISERS) MAP FORMAL R/W DEDICATION NOT PROVIDED". A FORMAL RIGHT OF WAY DEDICATION WAS NOT PROVIDED TO OR PURSUED BY THE SURVEYOR FOR THE PURPOSES OF THIS SURVEY.

CERTIFIED TO:
SOUTH WEST FLORIDA WATER MANAGEMENT DISTRICT

SPECIFIC PURPOSE SURVEY
OF PARCEL LYING IN SECTION 1, TOWNSHIP 27 SOUTH, RANGE 15 EAST, PINELLAS COUNTY, FLORIDA

#	REVISION	DATE	BY
1	REVISED WETLANDS	07/10/2023	DC

ATWELL
BEARD AND WINSMERE GROUP
CERTIFICATE OF AUTHORIZATION #LB 8023
5810 E. SKELLY DRIVE, SUITE 400, TULSA, OKLAHOMA 74135
5810 E. SKELLY DRIVE, SUITE 400, TULSA, OKLAHOMA 74135
(918) 524-8200 (P) (918) 524-8201 (F)

Scale: 1"= 60' | drawn by: DC/AG | FB/PG: NONE | JOB: 23001469 | DATE: 04/28/2023

SHEET# 2 OF 2

NOT VALID WITHOUT THE ORIGINAL SIGNATURE AND SEAL OF A FLORIDA LICENSED SURVEYOR AND MAPPER.
THE SEAL APPEARING ON THIS DOCUMENT WAS AUTHORIZED BY DALTON R. CROSS, P.S.M.

DALTON R. CROSS, P.S.M. #7329
FLORIDA CERTIFICATE NO. 7329

DATE OF SURVEY 04/28/2023

Prepared by and Return to:
Brian J. Aungst, Jr., Esq.
Macfarlane, Ferguson & McMullen, P.A.
625 Court Street, Suite 200
Clearwater, FL 33756

DECLARATION OF RESTRICTIONS

KNOW ALL MEN BY THESE PRESENTS, that the undersigned, TARPON SPRINGS ONE LLC, a Florida limited liability company ("*Owner*"), being the owner of the real property located at 310, 320, and 340 Anclote Road, Tarpon Springs, Florida 34689 and more particularly described in Exhibit "A" attached hereto and incorporated herein (referred to herein as the "*Property*"), makes the following Declaration of Restrictions encumbering said Property, specifying that this Declaration shall constitute a covenant running with the land and that this Declaration shall be binding upon the undersigned and upon all persons deraigning title through the undersigned. These restrictions, during their lifetime, shall be for the benefit of and limitation upon all present and future owners of the Property:

1. Use Restrictions. At no time now or in the future shall the Property be used as:

   a. Light and Heavy Printing Establishment;
   b. Motor Freight Terminals;
   c. Motor Pool Facility;
   d. Correctional Institution;
   e. Heavy Utility Service;
   f. Heliports and/or Helistops;
   g. Junkyards and/or Salvage Yards;

[*Rest of Page Intentionally Left Blank*]

[*Signature Page to Follow*]

IN WITNESS WHEREOF, we have set our hands and seals this ____ day of _____, 2025.

Signed, sealed and delivered in the presence of:

_____
Witness #1 Signature

_____
Witness #1 Printed Name

TARPON SPRINGS ONE LLC, a Florida limited liability company

_____
Witness #2 Signature

_____
Witness #2 Printed Name

By: _____

STATE OF FLORIDA
COUNTY OF PINELLAS

The foregoing instrument was acknowledged before me by means of ☐ physical presence or ☐ online notarization, this ____ day of _____ 2025 by _____ as _____ of TARPON SPRINGS ONE LLC, a Florida limited liability company, on behalf of the company. He is personally known to me or has produced _____ as identification.

SEAL

_____
Notary Public

_____
Printed Notary Name

My Commission Expires:

Exhibit A
Legal Description of Property

PROPOSED ZONING MAP

A-R	Agricultural-Residential	N-B	Neighborhood Business
R-100	Single Family Residential	H-B	Highway Business
R-70	Single Family Residential	G-B	General Business
R-M	Residential-Multi-Family	T F	Tourist Facility
R-O	Residential-Office	I-R	Industrial-Restricted
R-R	Residential-Resort	L-C	Land Conservation

ZONING ORDINANCE NO. 329 IS HEREBY REVISED BY ACTION OF THE BOARD OF CITY COMMISSIONERS WITH THE ADOPTION OF THE COMPREHENSIVE PLAN BY ORDINANCE NO. 643 AND CODE OF ORDINANCE, SECTION 22-25, DATED DECEMBER 15, 1970.

SCALE IN FEET 1" = 800'

REVISED OFFICIAL ZONING MAP OF THE CITY OF TARPON SPRINGS, PINELLAS COUNTY, FLORIDA.

Joe McCreary Copy
R-M; R-70; R-100; R-R;

GULF OF MEXICO

LAKE TARPON

SALT LAKE

RIVER

ANCLOTE

KREAMER BAYOU

WHITCOMB BAYOU

74053243 4161 PG 1070

ORDINANCE 243

AN ORDINANCE OF THE BOARD OF COMMISSIONERS OF THE CITY OF TARPON SPRINGS, FLORIDA, ANNEXING TO THE CITY OF TARPON SPRINGS, FLORIDA, THE PROPERTY HEREINAFTER DESCRIBED ACCORDING TO THE PROVISIONS OF SECTION 171.16, FLORIDA STATUTES, 1972, LOT 63, TAMPA AND TARPON SPRINGS LAND COMPANY SUBDIVISION, SECTION 1-27-15, TOGETHER WITH ALL ABUTTING STREETS AND ROADS, WITH C-1, COMMERCIAL RETAIL DISTRICT ZONING TO INCLUDE WAREHOUSES AND OFFICES.

BE IT ORDAINED BY THE BOARD OF COMMISSIONERS OF THE CITY OF TARPON SPRINGS, FLORIDA.

Section 1. The City of Tarpon Springs, Florida, having been presented a proper petition for annexation by the owners of the real property hereinafter described in an unincorporated area of Pinellas County, Florida, which is contiguous to the City of Tarpon Springs, Florida, and after the holding of a public hearing on the matter including the zoning thereof after required legal notice as to zoning, said property being situated in Pinellas County, Florida, and described as: Lot 63, Tampa and Tarpon Springs Land Company Subdivision, Section 1-27-15, together with all abutting streets and roads, with C-1, Commercial Retail District Zoning to include warehouses and offices.

APR 18 5 28 PM '74

RECORDED IN PINELLAS CO. FLA.
CLERK CIRCUIT COURT

that the Board of Commissioners of the City of Tarpon Springs, Florida, has determined that the petition bears the signatures of all owners of property in the area proposed to be annexed, that the city of Tarpon Springs, Florida, acting by and through its Board of Commissioners and in conformity with Section 171.16, Florida Statutes 1972, hereby annexes the above described property and redefines the boundary lines of the City of Tarpon Springs, Florida, to include said real property, and all-abutting and connecting streets and roads, with C-1, Commercial Retail District zoning to include warehouses and offices.

~~zoning~~

Return: City of Tarpon Springs
P.O. Box 1175
Tarpon Springs, Fla. 33589

Section 2. This ordinance shall be published in its entirety once a week for four (4) consecutive weeks in the Tarpon Springs Leader, and a copy filed with the clerk of the Circuit Court of Pinellas County and with the department of state.

PASSED AND ADOPTED in Regular session this 16th day of April, 1974

Mayor-Commissioner

ATTEST:

City Clerk and Collector

Commissioners

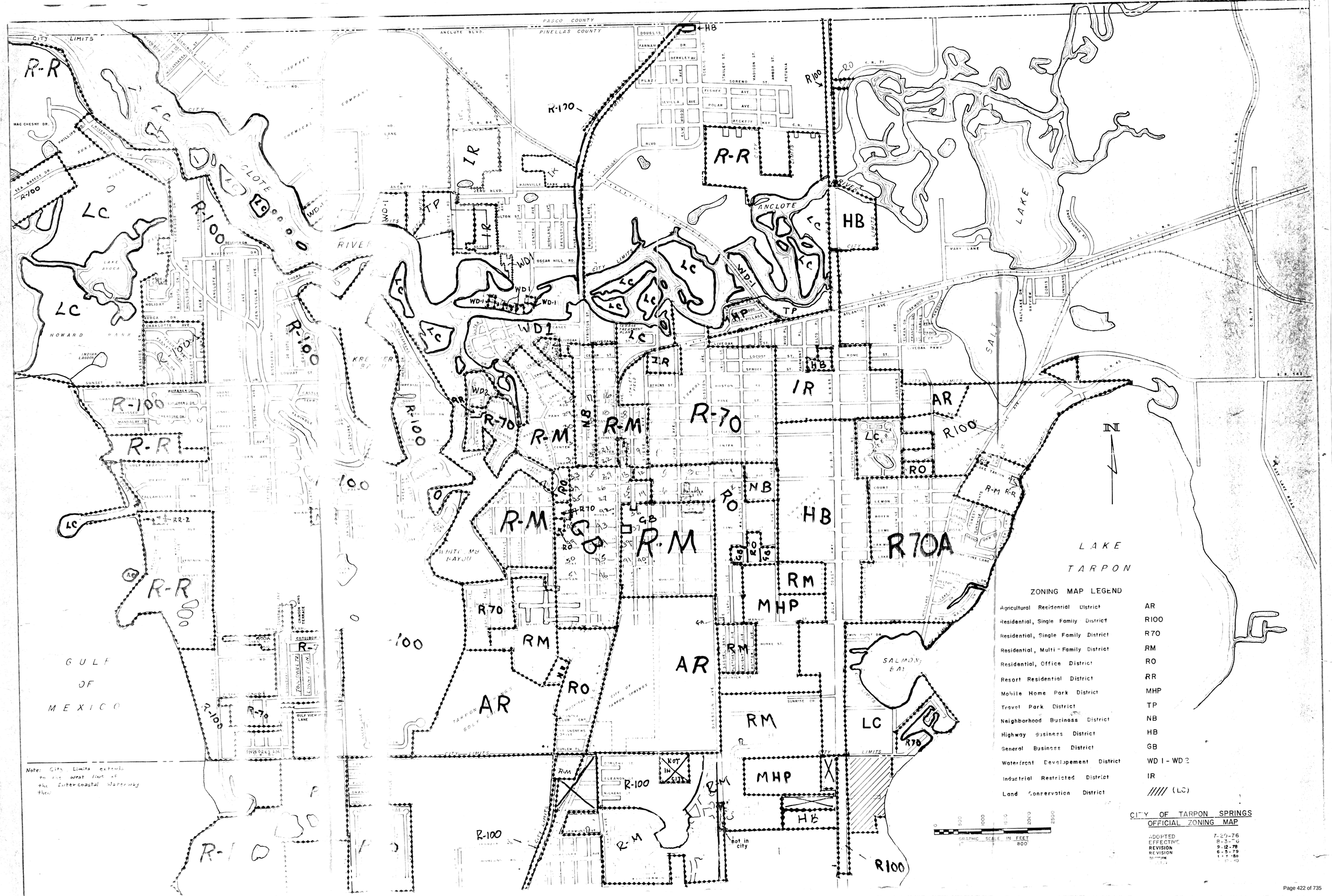

ZONING MAP LEGEND

Agricultural Residential District	AR
Residential, Single Family District	R100
Residential, Single Family District	R70
Residential, Multi-Family District	RM
Residential, Office District	RO
Resort Residential District	RR
Mobile Home Park District	MHP
Travel Park District	TP
Neighborhood Business District	NB
Highway Business District	HB
General Business District	GB
Waterfront Developement District	WD 1 - WD 2
Industrial Restricted District	IR
Land Conservation District	///// (LC)

CITY OF TARPON SPRINGS
OFFICIAL ZONING MAP

ADOPTED	7-20-76
EFFECTIVE	8-3-76
REVISION	9-12-78
REVISION	6-5-79
REVISION	1-7-80
REVISION	10-20

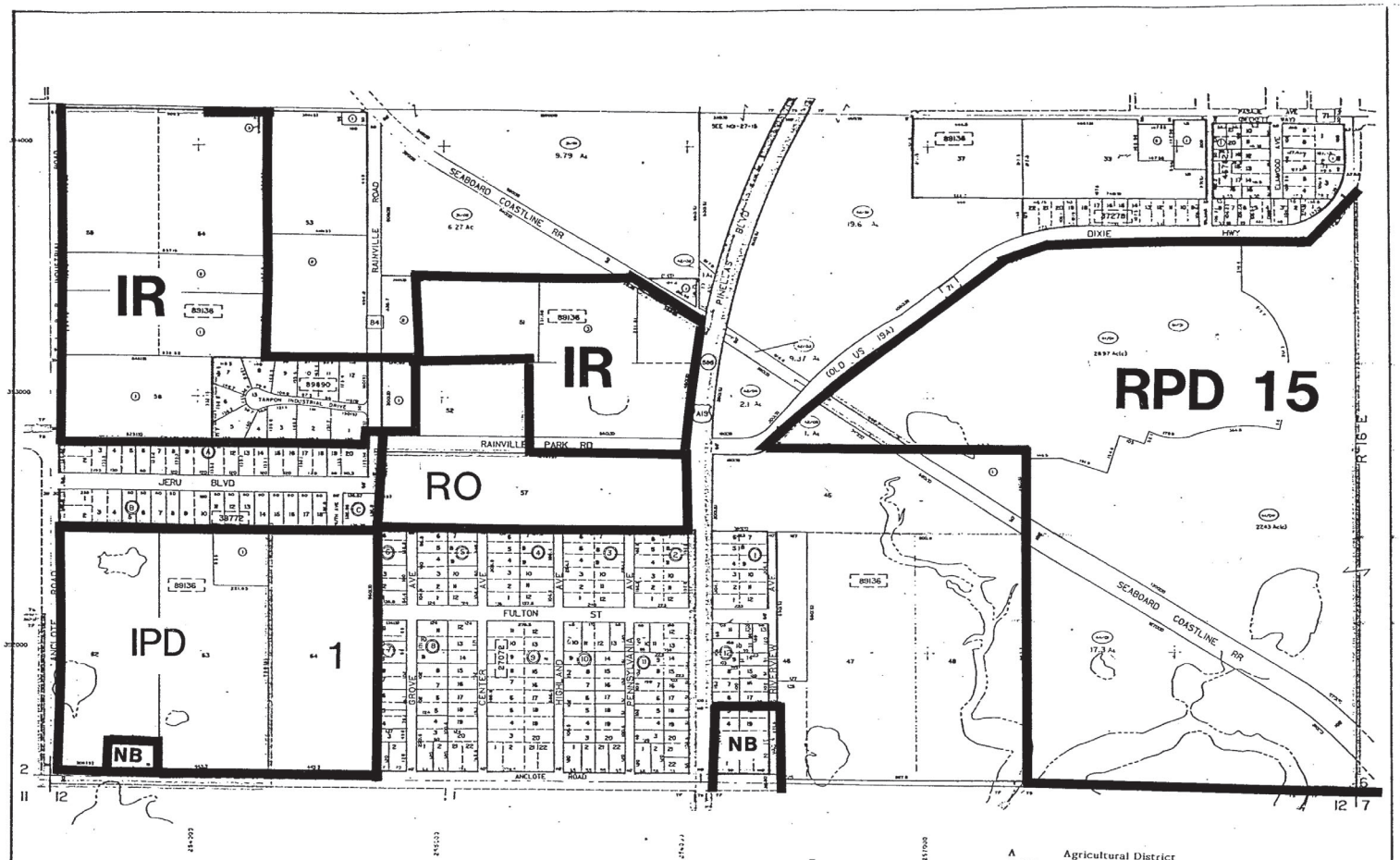

1. ORD. #90-37 (ANNEXATION), ORD. #90-38 (LAND USE), FILE AR#90-04

NO	NAME	PB PG
27072	FAIRVIEW *BLOCKS 1 TO 10. TARPON SPRINGS	09/018
37278	HARSHAW HEIGHTS	19/049
38772	HIGHLAND GROVE MANOR	45/008
46782	KING'S ADD TO ALTA VISTA	16/045
89136	TAMPA & TARPON SPRINGS LAND CO	H1/116
	INDEX UPDATE	
89890	TARPON INDUSTRIAL CENTER	93/065

A	Agricultural District
R-100	Single Family Residential District
R-100A	Single Family Residential District
R-70A	Single Family Residential District
R-70	One and Two Family Residential District
CRM	Conditional Residential Mix District
RM	Residential Multifamily District
MHP	Mobile Home Park District
TP	Trailer Park District
RO	Residential Office District
NB	Neighborhood Business District
HB	Highway Business District
CS	Commercial Service District
GB	General Business District
IB	Intensive Business District
WDI	Waterfront Development District
WDI-A	Waterfront Commercial Fishing Development District
WDII	Waterfront and Marine Industry Development District
IR	Industrial Restricted District
IH	Industrial Heavy District
RPD	Residential Planned Development District
CPD	Commercial Planned Development District
IPD	Industrial Planned Development District
LC	Land Conservation District

PROPERTY OWNERSHIP MAP

PINELLAS COUNTY

RONALD J. SCHULTZ
PROPERTY APPRAISER

SCALE 1"=200 FT
DATE OF MAP: 10/17/79

COUNTY LOCATOR

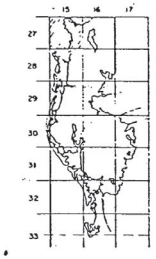

SHEET MATCH

N02-27-15	N01-27-15	N06-27-16
S02-27-15	S01-27-15	S06-27-16
N11-27-15	N12-27-15	N07-27-16

LEGEND

COUNTY LINE — AREA (FROM DEED) 10.5 Ac
CITY LIMIT LINE — AREA (CALCULATED) 10.5 Ac(c)
TAX DISTRICT LINE — DIMENSIONS (FROM DEED) 100.3
ROAD R/W — DIMENSIONS (SCALED) 100(3)
RAILROAD R/W — WATER
PROPERTY LINE — INTERSTATE HIGHWAY 75
LAND HOOK — U.S. HIGHWAY 19
INTERIOR TRACT LINE OR ORIGINAL LOT LINE — STATE HIGHWAY 60
COUNTY HIGHWAY 1
SUB LOT NUMBERS 31 — ROADS OR STREETS BY NAME
PARCEL NUMBER 35 — MAJOR TRANSMISSION LINES POWER GAS OR OIL
BLOCK NUMBER 2
STATE PLANE COORDINATES — SECTION CORNERS 2 1 / 11 12
CHURCHES, SCHOOLS, CEMETERIES, AIRPORTS, GOVERNMENT LANDS, ETC. BY NAME — N & B. LINE AT FARMS, PINELLAS GROVES 2 1 / 3 4
BLK. DESIGNATOR
SUB NUMBER
SUB PARCEL NO. 3

REVISIONS

DATE	BY	CHANGES OR ADDITIONS
04/87	REI	UPDATE
11-82	MILES	"
2/84	JSC	UPDATE
2/86	AT	UPDATE
3/86	FEC	UPDATE

SECTION S ½ 01
TOWN 27 SOUTH, RANGE 15 EAST

City of Tarpon Springs

TRC Comment Report

324 E. Pine Street, Tarpon Springs, FL, 34689 Telephone: 727-942-5617

Project	**25.28** PNZ - Anclote Road Industrial
Project Address	310 Anclote Rd Tarpon Springs, FL 34689 United States
Files and Attachments	Survey_310 Anclote Road.pdf Design Development

Instructions

Please review comments below and provide any additional required information. Your project will not be scheduled for Planning and Zoning Board, Board of Adjustment, or Board of Commissioners review until all required information or revised plans are provided. If no additional information is required, you will be informed of when the project will be scheduled for public hearing by Planning and Zoning staff. Please keep in mind that the Planning & Zoning Department has 90-day suspension period from the date of the TRC review for the submittal of revisions/additional information. If revised plans/additional information are not submitted within the above referenced time frame, the application will be considered to be “EXPIRED” and a new application will have to be submitted. If you have questions concerning any of the above information, please do not hesitate to contact the Planning and Zoning Department for assistance.

Arborist

[Sheet 2 | Comment 00001 | Survey_310 Anclote Road.pdf]

Shannon Brewer

ADVISORY COMMENT: If tree removal will be needed for construction, at time of permitting a tree removal application and supporting documentation will be required. A New

Construction Checklist can be found at https://www.ctsfl.us/building-development-department/tree-and-site-information/

[Sheet 2 | Comment 00002 | Survey_310 Anclote Road.pdf]

Shannon Brewer

ADVISORY COMMENT: Silt fence and tree barricade installation is required prior to land clearing. An inspection is required for compliance. It is contractor's responsibility to call for inspection.

Fire

[Sheet 1 | Comment 00003 | Survey_310 Anclote Road.pdf]

Kevin Wodrich

Not enough information to give comments. Comments to be provided with more complete plan.

K. Wodrich, Fire Marshal 4/21/25

Planning and Zoning

[Comment 00004]

Patricia McNeese

The property is in the Employment (E) and Preservation (P) Future Land Use Map (FLUM) categories and in the Industrial Planned Development (IPD) zoning district. The property was placed in the IPD zoning district under Ordinance 1990-10 adopting the current Land Development Code and the Zoning Atlas. A copy of the ordinance language, without the exhibits, is being transmitted with these comments. There is no adopted planned development associated with the property.

The property has features that may present some challenges for a development layout, including wetlands and potential transportation challenges associated with Anclote Road, a Pinellas County roadway. In the absence of information to the contrary, staff has concluded that the IPD zoning was intentionally established to recognize these features, and to provide design flexibility for this property under the planned development framework (see Land Development Code Section 76.00 "Purpose and Intent" and LDC Section 79.00 Review Criteria for Planned Developments).

[Comment 00006]

Patricia McNeese

The applicant has provided a narrative rationale for the requested change to Industrial Restricted (IR). The applicant has stated that the rezoning would expand the permitted uses available as of right on the property. The uses allowable in the IPD district are found in LDC Section 78.03. The uses allowable in the IR district are found in LDC Section 25.17. The uses allowable in the Employment (E) Future Land Use Map category are found in the Future Land Use Categories & Rules Table.

[Comment 00007]

Patricia McNeese

This transmission of TRC comments includes copies of historical zoning maps for the applicant's information. Staff will research the zoning history further and report findings and status back to the applicant.

[Comment 00008]

Patricia McNeese

This document includes comments resulting from the May 1, 2025 meeting of the Technical Review Committee meeting.

Public Services

[Sheet 1 | Comment 00005 | Survey_310 Anclote Road.pdf]

Heather Estright

Not enough information to provide comments.

June 9, 2025

Planning and Zoning Department
City of Tarpon Springs
324 East Pine Street
Tarpon Springs, FL 34689

Re: Opposition to Application No. 25-28 — Proposed Zoning Amendment Change from Industrial Planned Development (IPD) to Industrial Restricted (IR)

Dear Planning and Zoning Board Members,

On behalf of the Tarpon Key Homeowners Association, we are writing to express our strong opposition to the proposed amendment to the Official Zoning Atlas under Application No. 25-28, which seeks to rezone the property directly across from our community's main entrance to Industrial Restricted (IR).

This proposed change would directly and significantly impact the Tarpon Key community as well as the Riverbend community. The introduction of an increased industrial environment at this location is wholly incompatible with the family-oriented atmosphere we have worked hard to cultivate. We have serious concerns regarding increased traffic volume, elevated noise levels, and heightened safety risks—especially along a roadway that was never designed to support increased industrial traffic. These changes would not only diminish the quality of life for our residents but also have a detrimental effect on property values throughout the neighborhood.

When the City approved the Tarpon Key and Riverbend developments, it accepted a responsibility to support, promote, and develop the infrastructure necessary to ensure the safety, stability, and well-being of these residential communities. The proposed rezoning undermines those efforts and places an industrial footprint in an area already struggling with the challenges of a mixed-use zone.

This section of the city is not an appropriate location for additional industrial development. Rather than continue to add conflicting uses to an already delicate area, the city should take this opportunity to create a positive long-term asset for the North Anclote area. We urge you to consider a more suitable and community-minded use for this property—such as a public park—which would serve the growing population and improve the overall livability of this part of Tarpon Springs.

The path forward must be guided by thoughtful planning, community safety, and a vision for a cohesive and prosperous city. Approving this rezoning would send the opposite message.

We respectfully request that the Planning and Zoning Department deny Application No. 25-28.

Sincerely,

Gregory Barnes, President
Tarpon Key Homeowners Association
On Behalf of the Tarpon Key HOA Board and Residents

Patricia McNeese

From: Gregory Barnes <geeraytkpresident@gmail.com>
Sent: Wednesday, November 12, 2025 8:56 AM
To: Patricia McNeese
Cc: AmbroseTKBoard; TarponKeyVP
Subject: Re: #25-28

Warning: Unusual sender <geeraytkpresident@gmail.com>
You don't usually receive emails from this address. Make sure you trust this sender before taking any actions.

Hi Patricia, I was looking at the agenda online. Just to confirm, is the meeting postponed to the 15th of Dec?

Also, I am noticing the committee's restrictive covenant proposal does not match the applicant's proposed restrictions. Please annotate our objection to that. We will have residents at the meeting too.

Thank you!

Gregg

Gregg Barnes, President
Tarpon Key HOA

On Tue, Oct 28, 2025 at 2:43 PM Patricia McNeese <pmcneese@ctsfl.us> wrote:

> Gregory,
>
> Your original letter is already in the packet and will be there for the upcoming meetings. The staff report for this will be prepared and should be posted approximately a week ahead of the meeting. Let me know if you need anything else.
>
> Thanks. -Pat
>
> Patricia L. McNeese, AICP
>
> Planning Supervisor
>
> City of Tarpon Springs
>
> 324 East Pine Street

P.O. Box 5004

Tarpon Springs, FL 34688-5004

727-938-3711, ext. 2255

pmcneese@ctsfl.us

Hurricane Recovery Information:

https://connecttarponsprings.com/

From: Gregory Barnes <geeraytkpresident@gmail.com>
Sent: Saturday, October 25, 2025 8:45 PM
To: Planning <planning@ctsfl.us>
Cc: Renea Vincent <rvincent@ctsfl.us>; Patricia McNeese <pmcneese@ctsfl.us>
Subject: #25-28

Warning: Unusual sender <geeraytkpresident@gmail.com>
You don't usually receive emails from this address. Make sure you trust this sender before taking any actions.

I am not sure if I need to resubmit our letter again for the upcoming commissioner's meeting but it is still valid to us. Please keep using it.

Thank you

Gregg Barnes, President

Tarpon Key HOA

On Mon, Jun 9, 2025, 08:13 Gregory Barnes <geeraytkpresident@gmail.com> wrote:

Dear Planning and Zoning Board,

Please see the attached letter from the Tarpon Key Homeowners Association in response to the proposed zoning application #25-28. Our community strongly objects to the proposed change.

Thank you

Gregory Barnes, President

Tarpon Key HOA

On Fri, Jun 6, 2025 at 3:32 PM Renea Vincent <rvincent@ctsfl.us> wrote:

Hi Gregg,

Glad everything is working out with the gate! Regarding the notice that everyone received, I can understand why folks are in a panic. The short story is that it is a "speculative" rezoning. There isn't a project in mind (that we know of). The applicant thinks that it will be easier to sell/market the property under the proposed zoning category of Industrial Restricted.

The current zoning of IPD (Industrial Planned Development) has a somewhat more limited set of uses and is meant to facilitate business/industrial park type developments (very similar to the industrial portion of the River Bend directly to the north). The IPD is also requires compatibility with neighboring properties and is more protective of wetlands and habitat.

The Industrial Restricted (IR) zoning district is a bit more "user friendly" for a developer and allows for some additional uses. Pat McNeese is working on the staff report now and it should be ready early next week. In the meantime, she would be the best person to chat with. I have cc'd her on this email.

Have a great weekend!

Renea Vincent, AICP, CPM

Planning & Zoning Director

City of Tarpon Springs, FL

727-938-3711 ext. 2402

rvincent@ctsfl.us

Book time to meet with me

From: Gregory Barnes <geeraytkpresident@gmail.com>
Sent: Friday, June 6, 2025 3:18 PM
To: Renea Vincent <rvincent@ctsfl.us>
Subject: Thank you and a Question

External sender <geeraytkpresident@gmail.com>
Make sure you trust this sender before taking any actions.

Renea, first I would like to thank you and the City for stepping up to help rectify our gate situation. Everything went smoothly and at minimal cost. I do not know what more we can do to comply with ADA requirements except for installing a powered gate, and that would not be possible. Thank you again. If I can work it out, my plan is to attend the next city council meeting on the 10th and thank the Mayor too.

Secondly, concerning zoning application #25-28, is there anything you can give me as a heads up on what the mailer our community received is about? Everyone is panicking, and I would like to calm down rumors and people if possible. Can you tell me what's behind the reason for the zoning change? Is something in the works? I didn't find anything posted online yet.

Thank you!

Gregg

Gregg Barnes, President

Tarpon Key HOA

61763

Tampa Bay Times

Published Daily

STATE OF FLORIDA} ss
COUNTY OF HERNANDO, CITRUS, PASCO, PINELLAS, HILLSBOROUGH County

Before the undersigned authority personally appeared Jes Bowling who on oath says that he/she is a Legal Advertising Representative of the Tampa Bay Times a daily newspaper printed in St. Petersburg, in Hernando, Citrus, Pasco, Pinellas, Hillsborough County, Florida that the attached copy of advertisement being a Legal Notice in the matter APPLICATION #25-28 was published in said newspaper by print in the issues of 10/29/25 or by publication on the newspaper's website, if authorized.

Affiant further says that the website or newspaper complies with all legal requirements for publication in chapter 50, Florida Statutes. Affiant further says the said Tampa Bay Times is a newspaper published in Hernando, Citrus, Pasco, Pinellas, Hillsborough County, Florida and that the said newspaper has heretofore been continuously published in said Hernando, Citrus, Pasco, Pinellas, Hillsborough County, Florida each day and has been entered as a second class mail matter at the post office in said Hernando, Citrus, Pasco, Pinellas, Hillsborough County, Florida for a period of one year next preceding the first publication of the attached copy of advertisement, and affiant further says that he/she neither paid nor promised any person, firm or corporation any discount, rebate, commission or refund for the purpose of securing this advertisement for publication in the said newspaper.

Signature of Affiant Jessica Bowling
Sworn to and subscribed before me this **10/29/2025**

Signature of Notary of Public
Personally known **X** or produced identification.
Type of identification produced _____

JEAN M MITOTES
Notary Public - State of FLORIDA
Commission # HH 577686
My Commission Expires July 31, 2028

LEGAL NOTICE

NOTICE OF PROPOSED AMENDMENT TO THE OFFICIAL ZONING ATLAS OF THE CITY OF TARPON SPRINGS

The City of Tarpon Springs, Florida, proposes to adopt the following Ordinance:

ORDINANCE 2025-07

AN ORDINANCE OF THE CITY OF TARPON SPRINGS, FLORIDA AMENDING THE OFFICIAL ZONING ATLAS FOR 17.49 ACRES, MORE OR LESS, OF REAL PROPERTY LOCATED AT 310, 320 AND 340 ANCLOTE ROAD, ON THE NORTH AND EAST SIDES OF ANCLOTE ROAD APPROXIMATELY 2,000 FEET WEST OF THE INTERSECTION OF ANCLOTE ROAD AND NORTH PINELLAS AVENUE, FROM INDUSTRIAL PLANNED DEVELOPMENT (IPD) DISTRICT TO, INDUSTRIAL RESTRICTED (IR) DISTRICT; PROVIDING FOR FINDINGS; AND PROVIDING AN EFFECTIVE DATE.

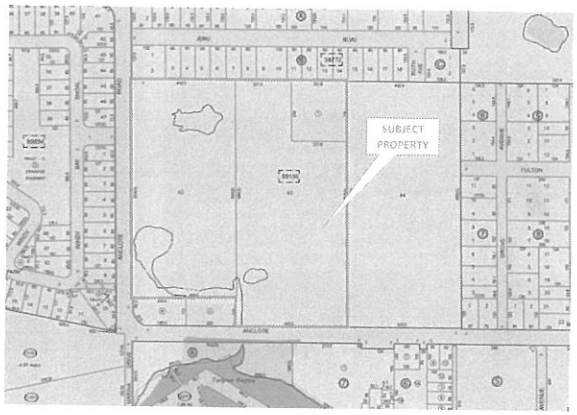

Public Hearings on the proposed ordinance will be held before the **Planning & Zoning Board** on

Monday, November 17, 2025 at 6:30 P.M.,

and before the **Board of Commissioners** on:

Tuesday, December 9, 2025 at 6:30 P.M. (1st Reading)
Tuesday, December 16, 2025 at 6:30 P.M. (2nd Reading)

ALL PUBLIC HEARINGS WILL BE HELD IN THE CITY HALL AUDITORIUM, 324 EAST PINE STREET, TARPON SPRINGS, FLORIDA.

Said hearings may be continued from time to time pending Adjournment. All interested parties are invited to attend these meetings to express your views or to present facts in the case. If a person decides to appeal any decision made by the Board of Commissioners with respect to any matter considered at these meetings or hearings, he will need a record of the proceedings, and that, for such purposes, he may need to ensure that a verbatim record of the proceedings is made, which record includes the testimony and evidence upon which the appeal is to be based.

Written comments may be addressed to the Planning & Zoning Department, (Phone (727) 942-5611), City of Tarpon Springs, P.O. Box 5004, Tarpon Springs, Florida 34688-5004. Written comments will become a part of the record. Materials related to this ordinance, including the complete legal description of the subject property by metes and bounds, are available for inspection. Persons wishing to participate in the hearing or receive more information may contact the Planning & Zoning Department during City Hall business hours at (727) 942-5611, or visit the City's web site at www.ctsfl.us. Any person with a disability requiring reasonable accommodation in order to participate in these meetings should call (727) 942-5611 or FAX a written request to (727) 943-4651.

PLEASE REFERENCE APPLICATION #25-28

10/29/2025 jb 61763-1

City of Tarpon Springs
Planning & Zoning Department
324 East Pine Street
Tarpon Springs, FL 34689

NOTICE OF UPCOMING PUBLIC HEARING REGARDING PROPOSED ZONING MAP AMENDMENT
APPLICATION #25-28

Please review the information on the **reverse side** of this card carefully!! If you have any questions regarding this matter, please call our office at (727) 942-5611
or email us at planning@ctsfl.us.

«AddressBlock»

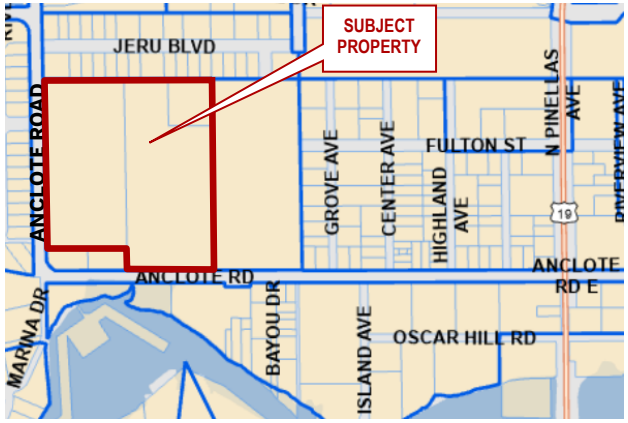

Application Description: An ordinance of the City of Tarpon Springs, Florida, to amend the official zoning atlas for 17.49 acres, more or less, of real property located at 310, 320 and 340 Anclote Road, on the north and east sides of Anclote Road approximately 2,000 feet west of the intersection of Anclote Road and North Pinellas Avenue, from Industrial Planned Development (IPD) district to Industrial Restricted (IR) District.

(Please Reference Application #25-28)

Please be advised that the Planning and Zoning Board will hold one Public Hearing on **Monday, November 17, 2025** at **6:30 p.m.** and the Board of Commissioners will hold two public hearings on **Tuesday, December 9, 2025** at **6:30 p.m.** and on **Tuesday, December 16, 2025** at **6:30 p.m.** All public hearings are held in the **City Hall Auditorium which is located at 324 East Pine Street, Tarpon Springs, FL 34689.** All interested parties are invited to attend this meeting to express their views or to present facts in the case. Written correspondence may be directed to the City of Tarpon Springs, Planning and Zoning Department, 324 East Pine Street, Tarpon Springs, FL 34688, or you may email your concerns to planning@ctsfl.us. Materials related to this application may be obtained by contacting the Planning & Zoning Department during City Hall business hours. The meeting packet and meeting instructions will be posted approximately one week prior to the meeting on the City's web site at www.ctsfl.us. Any person with a disability or without access to a computer or phone requiring reasonable accommodation in order to participate in these meetings should call (727) 942-5611 or email a written request to planning@ctsfl.us.

Memorandum

Date: December 9, 2025
To: Mayor and Board of Commissioners
Through: Charles Rudd, City Manager
From: Renea Vincent, Planning Director
Subject: **Resolution 2025-62**; **(Quasi-Judicial)** Conditional Use to allow for a restaurant/tavern in the T4b transect of the Special Area Plan on property located at 325 E Lemon Street; (Application #25-69)**(Renea Vincent, Planning & Zoning Director)**

Recommendation

Staff recommends ***approval*** of Resolution #2025-62, including the warrant request for increased seating. Staff's recommended approval includes the following conditions, as modified by the Planning and Zoning Board:

1. The maximum total number of seats shall be limited to 124.
2. The walkway connecting the Lemon St. public sidewalk shall be widened to a minimum of 4 feet and extended to create a continuous connection to the existing pedestrian walkway leading to the city parking lot to the north. This improvement shall be included with the building permit application for the interior modifications.
3. If not used as the primary entrance, the Lemon St. door must remain operational and have the appearance of an entryway.
4. A local business tax receipt must be obtained within 12 months.
5. Any outdoor dining/seating areas abutting parking must be protected by bollards or other acceptable protective measures.

The Planning and Zoning Board reviewed this item on November 17, 2025, and made the recommendation to approve the request, including the warrant for increased seating, by a vote of 7 to 0. The Board's recommendation included staff's original conditions, but modified Condition #2 to be applicable regardless of which entryway (west side door or Lemon Street door) was the primary access to the restaurant/tavern. The Board's recommendation also included the addition of Condition #5 outlined above.

Background

The applicant is seeking conditional use approval to allow a restaurant/tavern in the T4b (Residential + Industrial/Office) transect district of the Sponge Docks and CRA Special Area Plan (SAP). Additionally, the applicant is requesting warrant approval to allow up to 124 seats, 75 more than typically allowed by right, in order to obtain a special restaurant alcohol license. The applicant is proposing to utilize 2,500 square feet of an existing contributing-altered, historic building (former location of Silverking Brewing) for the restaurant/tavern.

Location Map

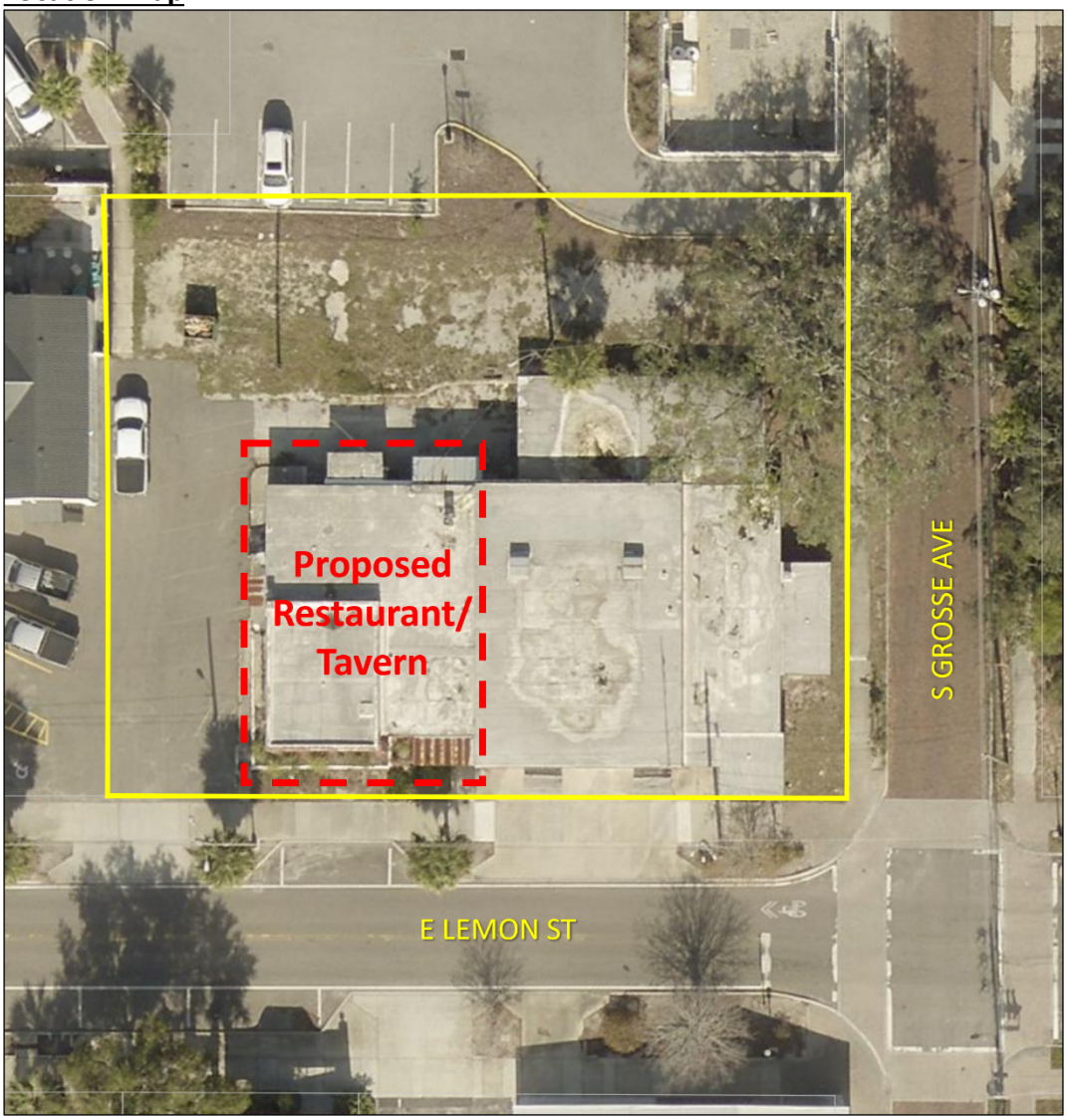

Funding

N/A

Strategic Plan Objective

Goal B.3: A safe, pedestrian-friendly community
D.2.2: Encourage infill redevelopment through incentives for vacant and unkept properties

CITY OF TARPON SPRINGS
PLANNING & ZONING BOARD / BOARD OF COMMISSIONERS
[NOVEMBER 17, 2025 / DECEMBER 9, 2025]

STAFF REPORT

Application No. / Project Title:	#25-69 (The Rusty Key Tavern)
Staff:	Allie Keen, AICP, Principal Planner
Applicant / Owner:	Thomas Scott / Benjamin Spiegel/Driftline Holdings LLC
Property Size:	+/- 0.41 acres
Current Zoning:	T4b (Residential + Industrial/Office)
Current Land Use:	AC (Activity Center) / Downtown Gateway Character District
Location / Parcel ID:	325 E. Lemon Street / 12-27-15-77778-402-0270
Resolution #:	#2025-62

BACKGROUND SUMMARY:

The applicant is seeking conditional use approval to allow a restaurant/tavern in the T4b (Residential + Industrial/Office) transect district of the Sponge Docks and CRA Special Area Plan (SAP). Additionally, the applicant is requesting warrant approval to allow up to 124 seats, 75 more than typically allowed by right, in order to obtain a special restaurant alcohol license. The applicant is proposing to utilize 2,500 square feet of the existing building for the restaurant/tavern.

PRELIMINARY STAFF RECOMMENDATION:

Staff recommends ***approval*** of Resolution 2025-62, including the warrant request for increased seating, with the following conditions:

1. The maximum total number of seats shall be limited to 124.
2. The walkway connecting the Lemon St. public sidewalk and proposed main entrance (west side entry) shall be widened to a minimum of 4 feet and extended to connect to the existing pedestrian walkway leading to the city parking lot to the north. This improvement shall be included with the building permit application for the interior modifications.
3. The Lemon Street door must remain operational and have the appearance of an entryway.
4. A local business tax receipt must be obtained within 12 months.

CURRENT PROPERTY INFORMATION:

Use of Property:	Vacant
Site Features:	One-story commercial building (2-tenant spaces proposed), parking lot, a few trees and some landscaping.
Vehicle Access:	This property can be accessed from both E. Lemon Street and S. Grosse Ave.

SURROUNDING ZONING & LAND USE:

	Zoning:	Land Use:
North:	T4b (Residential + Industrial/Office)	AC (Activity Center) / Downtown Gateway Character District
South:	T4b (Residential + Industrial/Office)	AC (Activity Center) / Downtown Gateway Character District
East:	T4b (Residential + Industrial/Office)	AC (Activity Center) / Downtown Gateway Character District
West:	T4b (Residential + Industrial/Office)	AC (Activity Center) / Downtown Gateway Character District

PLANNING CONSIDERATIONS:

When considering this application, the following general site conditions, planning concepts, and other facts should be noted:

1. The applicant is proposing to operate a restaurant/tavern within a portion (approximately 2,500 square feet) of the existing building on the subject property. The property was previously a brewery (Silverking Brewing) up until late 2022.
2. The subject property is located in the City's Special Area Plan's Downtown Gateway Character District where a mix of uses that support the downtown are encouraged. The subject property is located just on the edge of downtown, being only one block east of the Downtown Character District and only one block south of Tarpon Avenue. The surrounding area is comprised of a mixture of industrial, office, commercial and residential uses.
3. The subject property is located within the City's Historic District, and the existing building is a contributing-altered structure. The original brick portion of the building was the City's jailhouse, and the remaining portion was a firehouse. At this time, the applicant is not proposing any modifications to the exterior of the building/site. However, the property owner is currently seeking Heritage Preservation Board approval to replace windows and install new doors on the firehouse side of the building (#25-82).
4. Typically, retail establishments located within the T4b transect district are limited to a maximum of 49 seats. The intent of this was to ensure compatibility with surrounding residential uses, while still allowing for supporting neighborhood commercial. According to the provided floor plan, the restaurant will offer both indoor and outdoor seating totaling 124 seats. The applicant has indicated the increased seating is necessary to obtain the special restaurant alcohol license from the state (minimum 120 seats). The SmartCode allows flexibility in meeting specific provisions of the code if it is justified by the overall intent of the code (review by warrant). The subject site is unique, in that it is a historic building that was converted into a brewery. The property is located at the edge of downtown within an area where a mix of uses, including restaurants, bars, and cafes, are prevalent. It is of staff's opinion that a warrant to increase the maximum number of seats is justifiable for the proposed use because it meets the overall intent established in both the SmartCode and Special Area Plan, which is to encourage compact, pedestrian-oriented, mixed-use neighborhoods.
5. The Fire Marshal reviewed this application and the proposed seating floor plan. Based on the preliminary calculations, it was determined that the indoor occupancy is around 95 people. This is consistent with the proposed seating plan provided by the applicant (92 indoor seats, 32 outdoor seats).
6. The SmartCode encourages primary entrances from the street. The applicant is proposing to utilize the west side entrance from the parking lot as the main entrance to the restaurant instead of the entrance off Lemon St. The primary reason is due to the location of the kitchen, which is situated near the Lemon St. entrance. There is an existing walkway from the public sidewalk to the side entrance, however, it is only 2.5 feet wide. The adjacent property to the north is a city-owned parking lot. There is an existing 4-foot wide sidewalk that terminates from the parking lot into the northwest corner of

the subject site. A connection to this sidewalk to the restaurant entrance would not only help justify the side entry but also enhance pedestrian circulation onsite and throughout downtown meeting the overall intent of the Special Area Plan.

7. The remaining +/- 4,500 square feet of the building will be occupied by a custom printing and fulfillment business (Infinite Print). This use is allowed by right in the T4b transect zone. According to the narrative provided, Infinite Print's hours of operation will be opposite and not interfere with those of the restaurant. Further, the printing processes used do not produce noise or odors that would be bothersome to restaurant customers.
8. The proposed project represents the adaptive reuse of a nonconforming structure. Per Section 4.2.6 of the SmartCode, if the building is not undergoing substantial modification, it does not require the provision of additional parking or on-site stormwater handling.

REVIEW STANDARDS / PROVISIONAL FINDINGS OF FACT:

Section 209.01 of the Tarpon Springs Land Development Code (LDC) states that the Board shall not grant a conditional use unless certain standards are met and proven by competent substantial evidence. These standards, along with planning staff's provisional findings of fact are provided below:

1. **Conformance with the requirements of the Land Development Code.**

   Provisional Findings: The proposed use does not require any significant modifications to the existing site. All interior renovations/modifications will comply with the Florida Building Code.

2. **The use to which the property may be put is appropriate to the property in question and is compatible with existing and planned uses in the area.**

   Provisional Findings: The property is in the Downtown Gateway Character District of the City's Special Area Plan. This property is located on the edge of downtown in a transitional area, which is characterized by a mixture of uses including retail, office, industrial, and residential. The property is only one block south of Tarpon Avenue, where there are several restaurants, breweries, bars, and cafes similar to the proposed use. Further, the subject property was previously occupied by a brewery. The proposed use as outlined by the applicant is consistent with the overall intent of the Special Area Plan and is compatible with the existing and planned uses in this area.

3. **The conditional use is consistent with the goals, objectives and policies of all Elements of the City Comprehensive Plan.**

   Provisional Findings: The conditional use is consistent with the goals, objectives, and policies of all elements of the City's Comprehensive Plan and the overall intent of the Special Area Plan.

4. **The conditional use will not result in significant adverse impacts to the environment or historical resources.**

   Provisional Findings: The property is located within the City's Historic District, and the existing building is classified as contributing-altered. The applicant does not have any exterior modifications planned for the building at this time requiring review and approval from the Heritage Preservation Board. The proposed use will not negatively impact the historic significance of the structure, rather make use of an existing historic building within the heart of downtown. This property is not located within an environmentally sensitive area.

5. **The conditional use will not adversely affect adjoining property values.**

   Provisional Findings: The site is in a mixed-use area that includes industrial, office, commercial, and residential. The proposed restaurant/tavern will occupy an existing structure within the City's downtown that was recently utilized as a brewery and is not expected to adversely impact surrounding property values.

6. **The conditional use will not adversely impact nor exceed the capacity or the fiscal ability of the City to provide available public facilities, including transportation, water and sewer, solid waste, drainage, recreation, education, fire protection, library service and other similar public facilities.**

   Provisional Findings: There are existing facilities available to serve this property and the proposed use will not require extension of new public services to the site and will not substantially affect the ability of the City to provide adequate public facilities.

7. **The conditional use shall provide for efficient and orderly development considering the impact upon growth patterns and the cost to the City to provide public facilities.**

   Provisional Findings: The proposed restaurant/tavern makes use of an existing historic building within the City's Special Area Plan. The use will enhance and carry out the intent of the Special Area Plan and support the existing downtown uses. The City does not expect to incur any costs in providing public facilities.

8. **The public health, safety and welfare shall be observed with any reasonable conditions necessary.**

   Provisional Findings: The proposed use is not expected to adversely impact the general health, safety, and welfare. The applicant will be required to meet all applicable building, fire, and health department codes and will obtain a local business tax receipt to operate the restaurant/tavern.

TECHNICAL REVIEW COMMITTEE:

The Technical Review Committee (TRC) reviewed this application on September 4, 2025, for completeness and conformance with the Land Development Code, Comprehensive Plan, SmartCode, Special Area Plan, and other applicable requirements. The TRC determined that the application was complete and ready for processing. There were no further comments regarding the conditional use request from the TRC.

PUBLIC CORRESPONDENCE:

Notices were sent to property owners within 500 feet of the subject property. This included 74 addresses. *Staff have not received any responses to these notices.*

ATTACHMENTS:

1. Staff Presentation
2. Draft Resolution #2025-62
3. Application
4. Narrative
5. Proposed Seating Plan
6. Existing Floor Plan
7. Survey
8. Certificate of Concurrency Form

THE RUSTY KEY TAVERN
#25-69

Planning & Zoning Board Meeting – November 17, 2025

Board of Commissioners Meeting – December 9, 2025

SUMMARY OF REQUEST

- **Resolution #2025-62 – Conditional Use (#25-69)**
  - Location: 325 E. Lemon Street
  - Property Size: +/- 0.41 acres
  - Current Land Use: AC (Activity Center) / Downtown Gateway Character District
  - Current Zoning: T4b (Residential + Industrial/Office)
  - Proposed Use of Property: Restaurant/Tavern

- **Owner/Applicant:** Driftline Holdings LLC (Benjamin Spiegel)

LOCATION

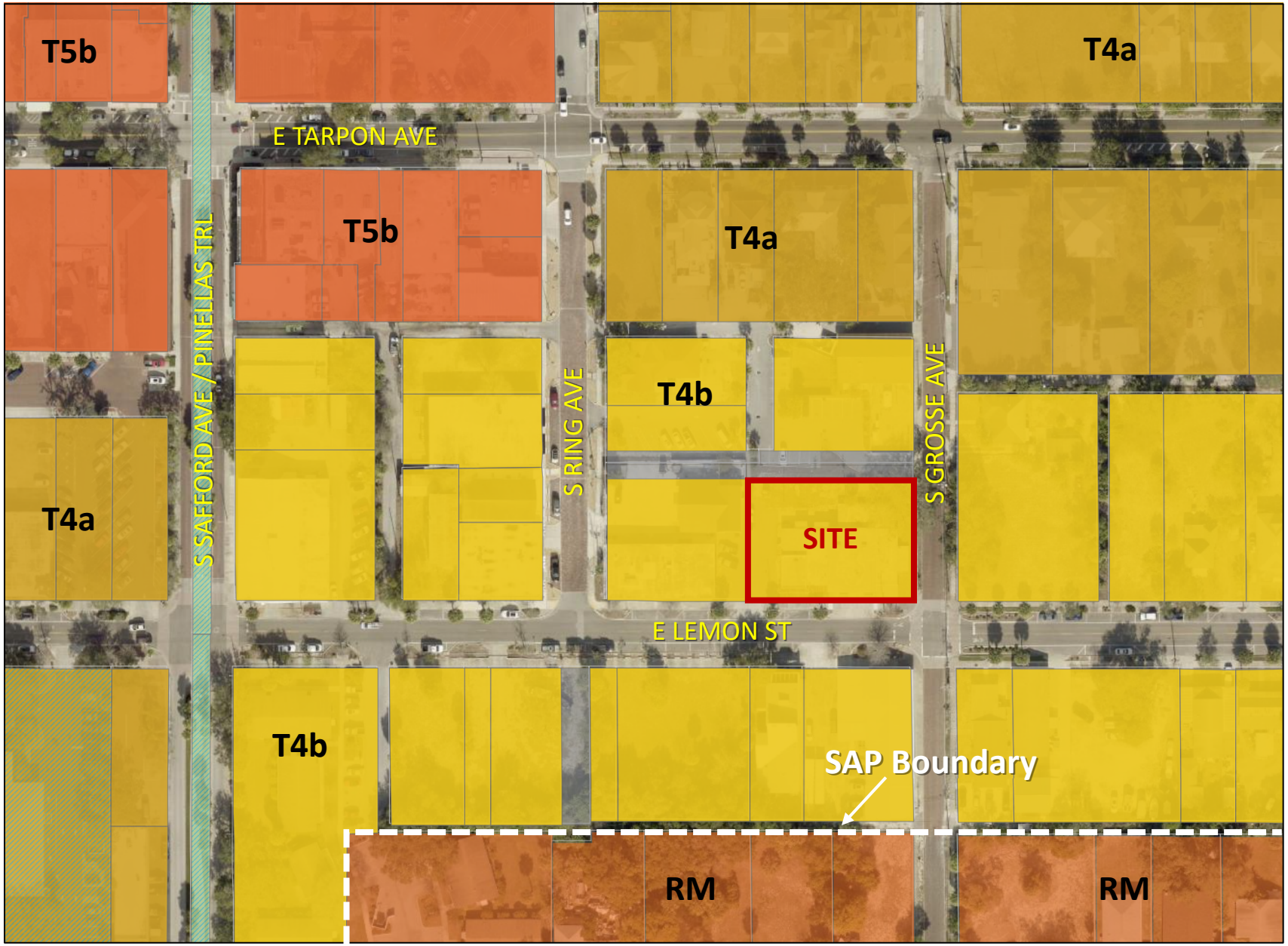

CITY OF TARPON SPRINGS
PLANNING & ZONING DEPARTMENT

PROPOSED RESTAURANT

- Former site of Silverking Brewing (up to 2022)
- +/- 2,500 sqft. of Existing Building
- Indoor & Outdoor Seating
- Historic Structure (Contributing-Altered)
  - Original Brick Portion (Restaurant Location) was the City's Jailhouse.
  - Remaining Portion was a firehouse.
  - No exterior modifications proposed at this time.
- Remaining portion of building occupied by custom printing & fulfillment business (Infinite Print)
  - Hours of operation will be opposite.
  - Printing processes do not produce noise or odors that would be bothersome to restaurant customers.

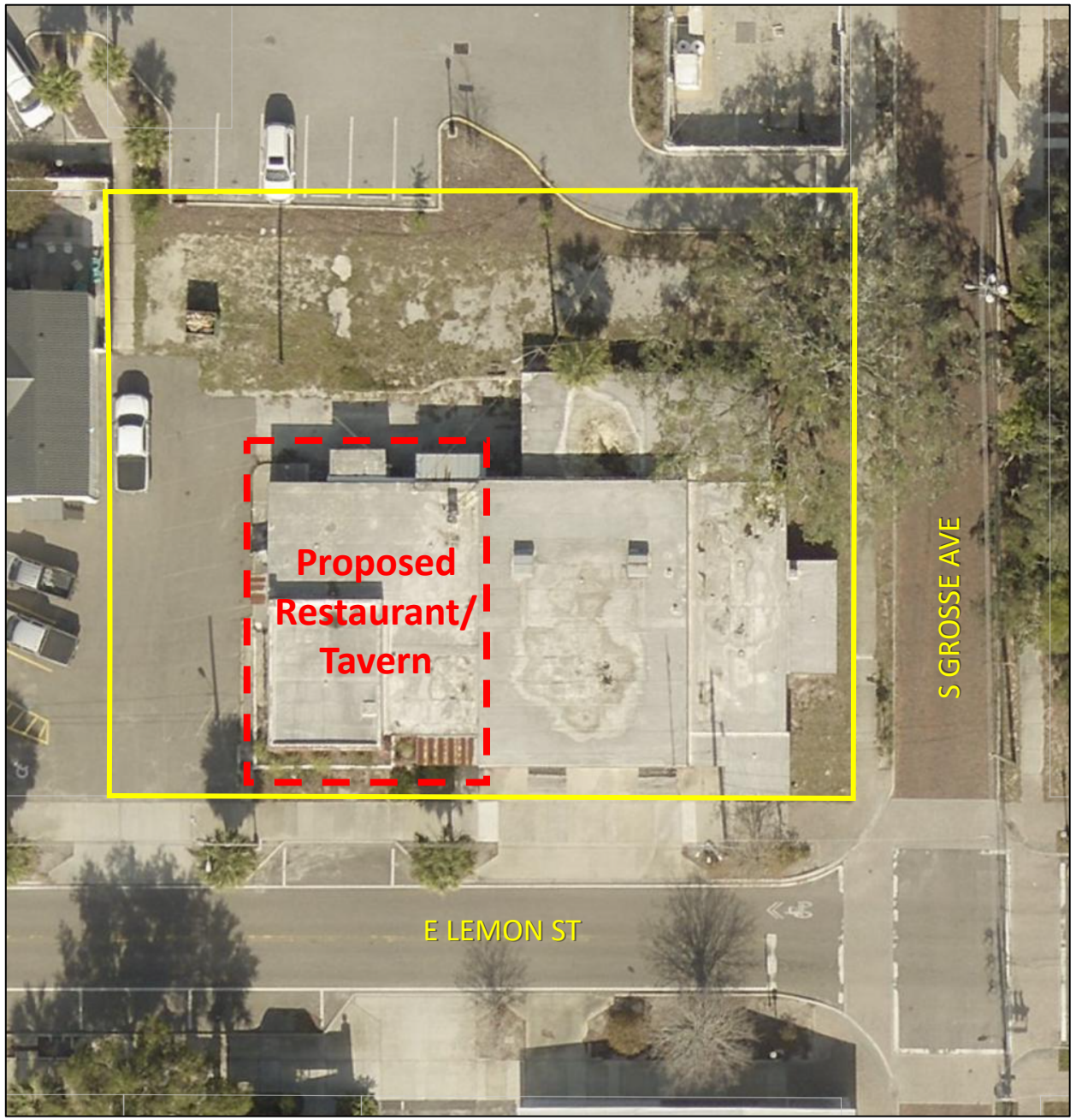

CITY OF TARPON SPRINGS
PLANNING & ZONING DEPARTMENT

SEATING

- **T4b – Retail Establishment Limitations (Adjustable by Warrant)**
  - Seating:
    - Limitation = Max. 49 Seats
    - Proposed = 124 Seats
      - Indoor = 92 Seats
      - Outdoor = 32 Seats
  - Fire Marshal Review:
    - Occupancy (Indoor) = 95 persons
- **Considerations**
  - Special Restaurant Alcohol License requires minimum 120 seats.
  - Historic building was previously converted and utilized as a brewery.
  - Property is located at the edge of downtown (one block south of Tarpon Ave) in a mixed use area.

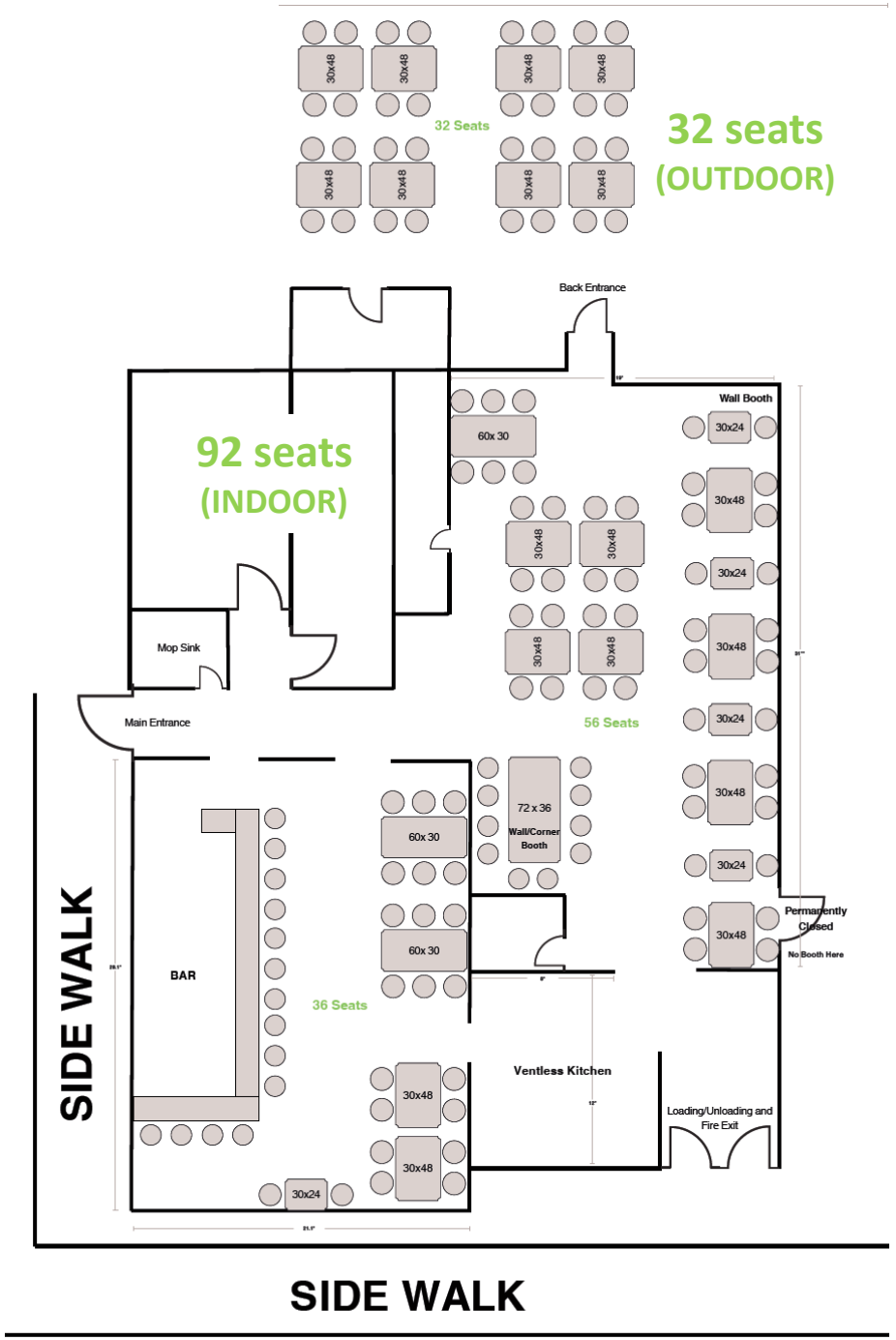

PEDESTRIAN ACCESS

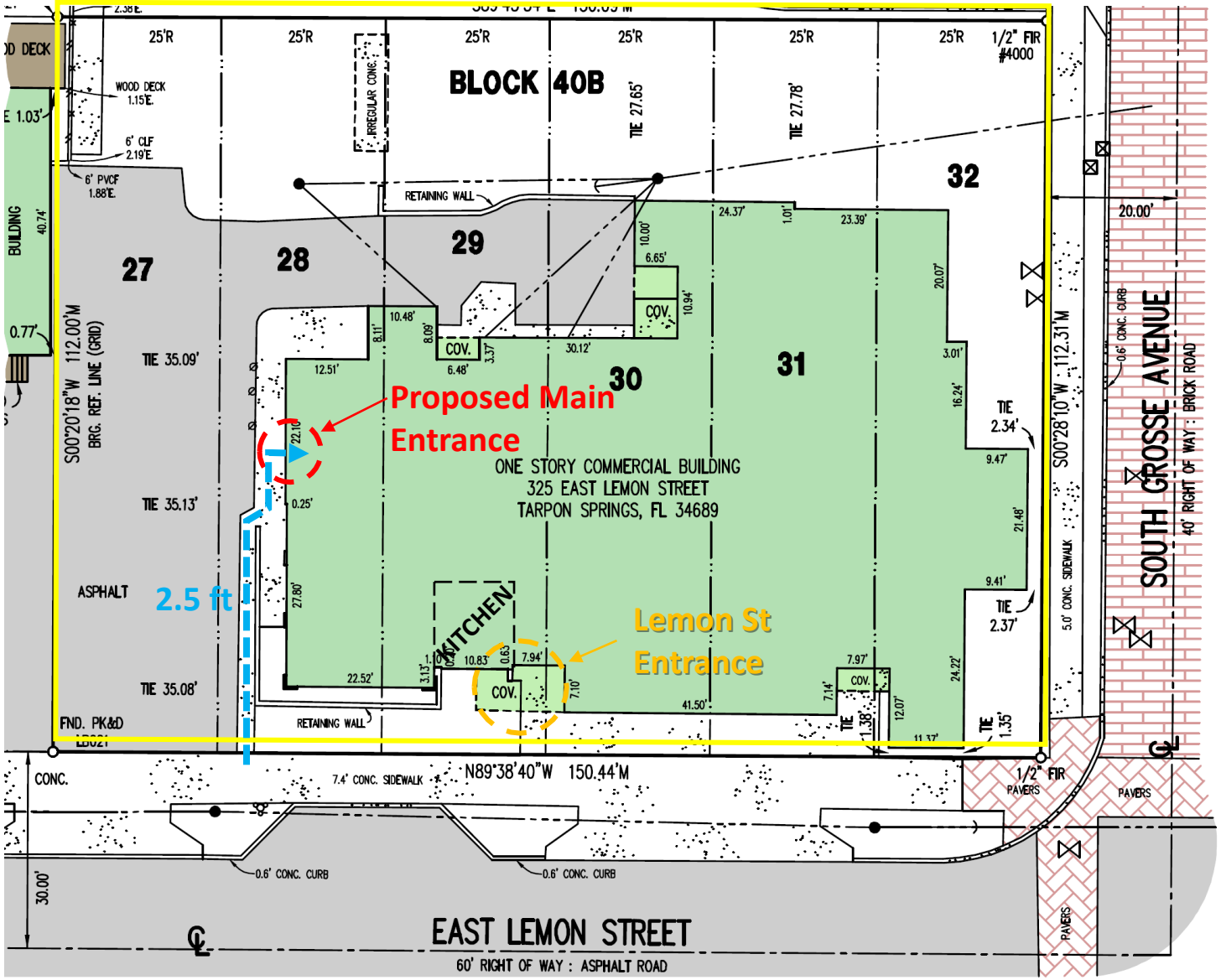



CITY OF TARPON SPRINGS
PLANNING & ZONING DEPARTMENT

PEDESTRIAN ACCESS

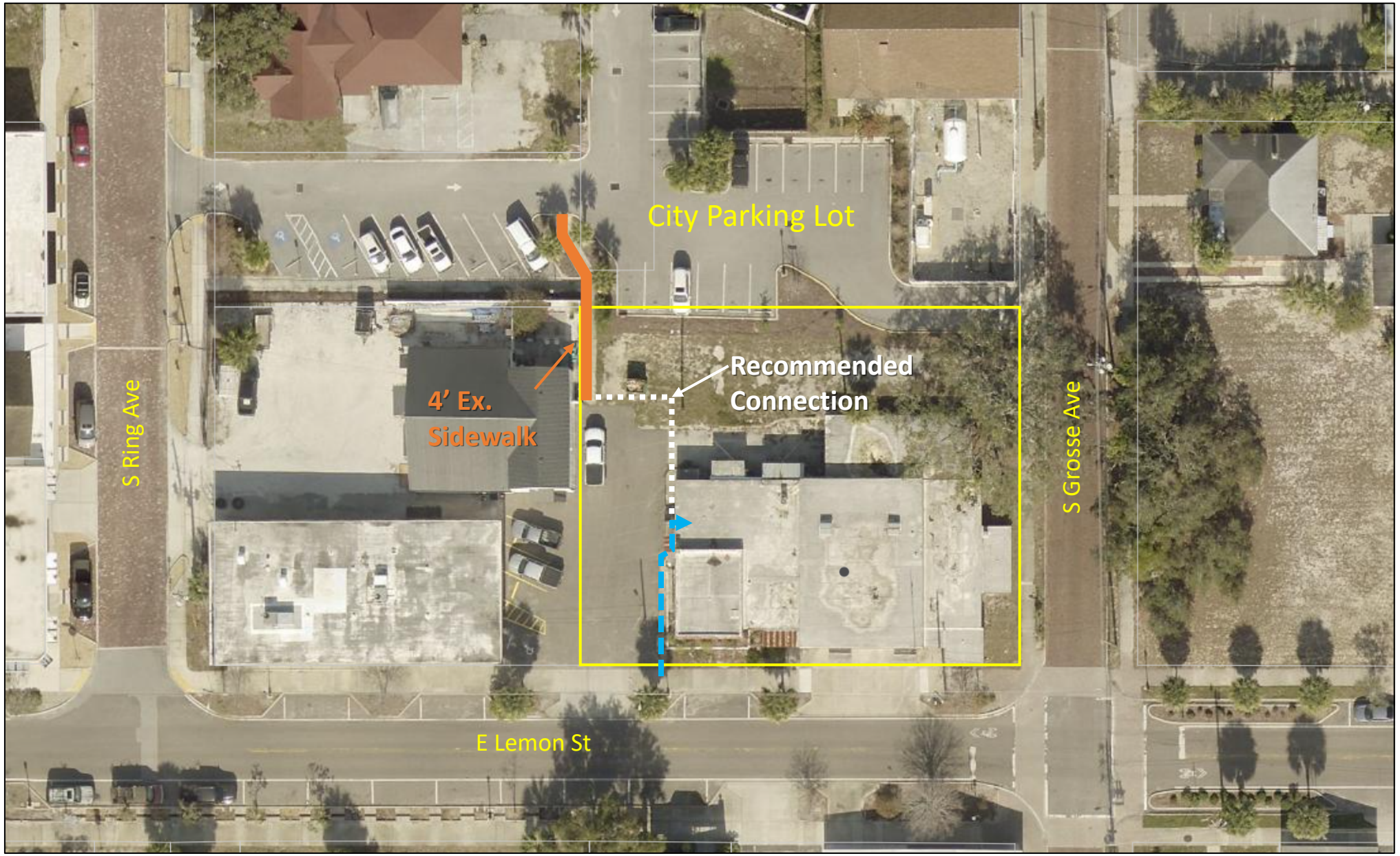

CITY OF TARPON SPRINGS
PLANNING & ZONING DEPARTMENT

REVIEW CRITERIA – CONDITIONAL USE

1) **Conformance with the Land Development Code.** The proposed use does not require any modifications to the existing site. Any future improvements would be required to comply with all local and state codes.

2) **The proposed use is appropriate to the property in question and compatible with existing and planned uses in the area.** The property is in the Downtown Gateway Character District and located on the edge of downtown, characterized by a mixture of uses including retail, office, industrial, and residential. The property is only 1 block south of Tarpon Ave., where there are several restaurants, breweries, bars, and cafes similar to the proposed use. Further, the property was previously a brewery up until 2022. The proposed use is consistent with the intent of the SAP and compatible with the existing and planned uses in this area.

3) **The use is consistent with the Comprehensive Plan.**

4) **The use will not adversely impact historical or environmental resources.** The property is in the historic district in a contributing-altered structure. There are no exterior modifications planned at this time requiring HPB approval. The proposed use will not negatively impact the historic significance of the structure, rather make use of an existing historic building within the heart of downtown. The property is not in an environmentally sensitive area.

REVIEW CRITERIA – CONDITIONAL USE

5) **The use will not adversely affect adjoining property values.** The site is in a mixed-use area that includes industrial, office, retail, and residential. The proposed restaurant/tavern will occupy an existing structure within the City's downtown that was recently utilized as a brewery and is not expected to adversely impact surrounding property values.

6) **The use will not adversely impact nor exceed the City's capacity to serve with public facilities.**

7) **The use shall provide for efficient and orderly development.** The use utilizes an existing historic structure and enhances and carries out the intent the SAP and supports existing downtown uses.

8) **The public health, safety, and welfare shall be observed with any reasonable conditions necessary.** The proposed use is not expected to adversely impact the general health, safety, and welfare. The applicant will be required to meet all applicable building, fire, and health department codes and will obtain a local business tax receipt to operate the restaurant/tavern.

PRELIMINARY STAFF RECOMMENDATION

Resolution #2025-62

Staff recommends ***approval***, including the warrant request for increased seating, with the following conditions:

1. The maximum number of seats shall be limited to 124.
2. The walkway connecting the Lemon St. public sidewalk and proposed main entrance (west side entry) shall be widened to a minimum of 4 feet and extended to connect to the existing pedestrian walkway leading to the city parking lot to the north. This improvement shall be included with the building permit application for the interior modifications.
3. The Lemon St. door must remain operational and have the appearance of an entryway.
4. A local business tax receipt must be obtained within 12 months.

Public Notice – 74 mailed notices; Staff has received no responses.

PLANNING & ZONING BOARD RECOMMENDATION

Planning & Zoning Board reviewed this item on Nov. 17, 2025, and made the recommendation to ***approve*** the request, including the warrant, by a vote of 7 to 0. The Board's recommendation included staff's original conditions, with the following modifications:

1. The maximum number of seats shall be limited to 124.
2. The walkway connecting the Lemon St. public sidewalk shall be widened to a minimum of 4 feet and extended to create a continuous connection to the existing pedestrian walkway leading to the city parking lot to the north. This improvement shall be included with the building permit application for the interior modifications. *(modified to be applicable regardless of primary entry door)*
3. If not used as the primary entrance, the Lemon St. door must remain operational and have the appearance of an entryway. *(adjusted depending on primary entry)*
4. A local business tax receipt must be obtained within 12 months.
5. Any outdoor dining/seating areas abutting parking must be protected by bollards or other acceptable protective measures. *(additional condition)*

There were no members of the public who spoke on this item.

RESOLUTION NO. 2025-62

A RESOLUTION OF THE BOARD OF COMMISSIONERS OF THE CITY OF TARPON SPRINGS, FLORIDA, APPROVING APPLICATION #25-69 REQUESTING CONDITIONAL USE APPROVAL TO ALLOW A RESTAURANT WITH UP TO 124 SEATS AT 325 EAST LEMON STREET, IN THE T4B (RESIDENTIAL - INDUSTRIAL/OFFICE) TRANSECT DISTRICT; PROVIDING FOR FINDINGS; PROVIDING FOR CONDITIONS; AND PROVIDING FOR AN EFFECTIVE DATE.

WHEREAS, the City of Tarpon Springs has received an application for a Conditional Use to allow for a restaurant/tavern on property located at 325 E. Lemon Street in the T4b (Residential – Industrial/Office) transect of the Special Area Plan; and,

WHEREAS, Table 4F of the Transect-Based Infill Code for the Sponge Docks and Community Redevelopment Area requires conditional use approval for such use; and,

WHEREAS, the Planning and Zoning Board held a public hearing on this application at its meeting of November 17, 2025; and,

WHEREAS, the Board of Commissioners must approve, deny or approve subject to conditions, each application for conditional use approval; and,

WHEREAS, written legal notice of this action has been provided in accordance with Article XII of the Comprehensive Zoning and Land Development Code.

NOW, THEREFORE, BE IT RESOLVED BY THE BOARD OF COMMISSIONERS OF THE CITY OF TARPON SPRINGS, FLORIDA, THAT:

SECTION 1: FINDINGS

Application #25-69 meets the criteria for approving a Conditional Use as set forth in Section 209.01 of the Land Development Code.

SECTION 2: CONDITIONAL USE APPROVAL

Application #25-69 under Resolution 2025-62, requesting Conditional Use approval to allow a restaurant/tavern on property located at 325 E. Lemon Street is approved, including the warrant request for increased seating, with the following conditions:

1. The maximum total number of seats shall be limited to 124.
2. The walkway connecting the Lemon St. public sidewalk shall be widened to a minimum of 4 feet and extended to create a continuous connection to

the existing pedestrian walkway leading to the city parking lot to the north. This improvement shall be included with the building permit applicable for the interior modifications.

3. If not used as the primary entrance, the Lemon St. door must remain operational and have the appearance of an entryway.
4. A local business tax receipt must be obtained within 12 months.
5. Any outdoor dining/seating areas abutting parking must be protected by bollards or other acceptable protective measures.

SECTION 3: EFFECTIVE DATE

This Resolution shall be effective upon adoption.

General Planning Application

CITY OF TARPON SPRINGS
PLANNING & ZONING DEPARTMENT
324 E. Pine Street, Tarpon Springs, FL 34689
(727) 942-5611 / planning@ctsfl.us

INSTRUCTIONS

Please complete the application fully and then **DOWNLOAD (print button)** the form to submit. This application, with all supporting materials and applicable application addendums, must be submitted **DIGITALLY** through the Planning and Zoning goPost portal. If a project requires multiple application types, please complete this form only once and upload it into each separate application type in goPost.

To verify which addendums apply to your project download the Application Addendum Checklist (PDF).

Prior to proceeding to public hearing an application must be deemed complete. All required application fees (see Fee Schedule (PDF)) **must be paid prior to the application being scheduled for Technical Review Committee (TRC)**. Fees can be paid in person or mailed.

Property Owner(s) Name*	Property Owner(s) Email*
DriftLine Holdings LLC	bds@spiegees.com

Property Owner(s) Address*	Property Owner(s) Phone*
1454 Columbia ave	7275429032

Applicant(s) Name (If different than owner)	Applicant(s) Email
First and Last Name / Entity Name	Email Address

Applicant(s) Address	Applicant(s) Phone
Street, City, State, and Zip Code	Phone Number

Agent/Representative (If applicable)

Benjamin Spiegel

Agent/Representative Email

bds@spiegees.com

Agent/Representative Address

1454 Columbia ave

Agent/Representative Phone

7275429032

Application Type (Check all that apply)*

- [ ] Annexation
- [x] Conditional Use
- [ ] Development Agreement
- [ ] Discussion Item
- [ ] Future Land Use Amendment
- [ ] HPB, Certificate of Appropriateness
- [ ] HPB, Designation of Historic Property
- [ ] HPB, Economic Hardship Exemption
- [ ] HPB, Petition for Removal
- [ ] Planned Development, Concept
- [ ] Planned Development, Final
- [ ] Planned Development, Preliminary
- [ ] Plat, Final
- [ ] Plat, Minor
- [ ] Rezoning
- [ ] Sidewalk Cafe
- [ ] Sidewalk Waiver
- [ ] Site Plan/Subdivision
- [ ] Temporary Use*
- [ ] Vacation, Plat or Property
- [ ] Vacation, Right-of-Way
- [ ] Variance
- [ ] Variance, After-the-Fact
- [ ] Variance, De Minimis
- [ ] Variance, FAR/ISR Adjustment
- [ ] Variance, Nonconforming Lot

***Temporary Use Dates**

Dates Requested

Project Name*

Lemon Street Taproom

Tax Parcel ID(s)*

12-27-15-77778-402-0270

Look Up Parcel ID

Project Location

325 East Lemon St
Tarpon Springs, FL 34689

Flood Zone

- ○ Zone X
- ○ Zone AE
- ○ Zone VE
- ◉ Not in a Flood Zone

Coastal High Hazard Area (CHHA)

- ○ Yes, property is in the CHHA
- ◉ No, property not in the CHHA

Site Acreage*

.41

Base Flood Elevation (BFE)

Elevation(s)

Current Land Use*

AC (Activity Center)

(Choices are alphabetized)

Lookup Land Use

Current Zoning*

T4d

(Choices are alphabetized)

Lookup Zoning

Proposed Land Use

-- Select One --

(If applicable)

Proposed Zoning

-- Select One --

(If applicable)

Summary / Purpose of Request*

Looking to turn the already existing 2500 SF taproom, that was previously used by Silverking Brewing, into a restaurant/tavern with a combined seating capacity of 130 (inside and outside). As I understand it, the current zoning is for 49 seats and this needs a conditional use permit to go above the 49

Electronic Signature Agreement*

By checking the **"I Agree"** box below, you acknowledge that **1)** this form and other applicable application addendums will not be signed in the sense of a traditional paper document, **2)** by signing in this alternate manner, you authorize your signature on these forms to be valid and binding to the same force and effect as a handwritten signature, and **3)** the information included in and with these forms are completely true and correct to the best of your knowledge.

☑ I Agree

Electronic Signature*

Benjamin Spiegel

Date*

11/7/2025

Electronic Signature

I, as the property owner or as an authorized representative of the property owner, authorize the filing of this application and will allow the Planning and Zoning Department staff to visit this property if necessary for the purpose of analyzing this request. Further, I will allow a public notice sign (if required) to be placed and remain on the property until the processing of the request is complete.

Electronic Signature*	**Date***
Benjamin Spiegel	11/7/2025

Steps to Download Form

1. Click the **'Print Only'** button below.
2. Your form will open in a new tab.
3. **Right click** on your mouse and **select 'Print'**.
4. Choose to print to **'PDF'**.
5. Save the form in your desired location.

Need help? Give the Planning Department a call at 727-942-5611.

The Rusty Key Tavern - Narrative

1. Executive Summary

The Rusty Key Tavern will be a Celtic-themed neighborhood tavern located in the historic 1909 jailhouse at 325 East Lemon Street in Historic Downtown Tarpon Springs, Florida. The tavern blends traditional Celtic hospitality with the rich historical character of the building, offering a unique and memorable dining and entertainment experience. With a menu that features thin-crust Chicago style “tavern” pizza, toasted sandwiches and a hearty Guinness stew, alongside a robust drink selection and multiple TVs for sports enthusiasts, The Rusty Key Tavern aims to become a local landmark and tourist hotspot.

2. Business Concept

The Rusty Key Tavern is looking to be a friendly neighborhood pub, offering a distinct dining atmosphere with a strong identity rooted in Celtic traditions located in the original jailhouse built in 1909 with a pricing strategy that reflects the current demographics of Tarpon Springs. With 2,200 square feet of indoor space and both indoor and outdoor seating, the tavern has a 110 maximum indoor capacity with a large additional outdoor space. The goal is to attract both locals and tourists, sports fans, and those seeking a historic and lively neighborhood pub environment.

3. Menu Highlights

The goal of the food offering at The Rusty Key Tavern is to have a simple menu with a small choice of excellent options. We would rather limit the size of the menu and focus on being the best at what we offer.

- Chicago style thin-crust “Tavern” pizza
- Texas style pizza rolls
- Irish stew
- Chili
- Selection of sandwiches, majority toasted/baked
- Irish nachos
- Irish Breakfast (select promotional days and times)
- Loaded baked potato
- Salad options
- Rotating local craft beer, domestics and imports (Guinness, Harp, Smithwick’s, etc)
- Full liquor bar with unique themed cocktails and a number of special Irish Whiskeys and Single Malt Scotch selections to stick with the theme.

4. Operations Plan

- Hours of Operation for 2026
    - Jan - Feb
        - Mon - Tues - Closed
        - Wed - Thurs: 4pm - 12am
        - Fri - Sun: 12pm - 12am
    - March - Dec
        - Mon - Tues: 4pm - 12am
        - Wed - Thurs: 2pm - 12am
        - Fri - Sun: 12pm - 12am
- Staff - 8 to 10 total

5. Market Opportunity

Tarpon Springs is a vibrant tourist town known for its historic sponge docks and Greek heritage. There is currently no traditional pub/tavern in the historic downtown district and there are currently no Celtic-themed taverns within 10 miles of Tarpon Springs that offer this kind of immersive experience, creating a niche opportunity. The Rusty Key Tavern will tap into the local love for history, sports, and craft food while also drawing in tourists looking for a one-of-a-kind pub destination.

The population of Tarpon Springs is 26,168 (2024 census data), having grown 4.1% since 2000. The median age is 55.7, with 14,152 people between the ages of 25 and 65 (the target market for the Rusty Key Tavern). The median household income is $68,87. Developers are currently placing a lot of faith in Tarpon Springs future with a large number of apartments and townhomes being built, which would help attract a younger crowd, lowering the median age in the coming years. We fully expect the population of Tarpon Springs to continue to grow, with the timing being perfect for a project of this nature.

6. Marketing Strategy

Target Demographic:

- Locals aged 25–65 looking for a unique pub experience
- Tourists exploring historic Tarpon Springs
- Sports fans seeking a chill game-day destination (10 strategically placed TVs)
- Young professionals for happy hour and evening gatherings
- Late night food (pizza and rolls)

The Rusty Key Tavern will use a mix of digital and community-based marketing. In addition, a schedule of events and focused promotions:

- Grand opening event with live Irish music, original songwriters, local musicians and specials
- Weekly trivia/bingo nights

- Dart League
- Limited live music (traditional folk and original songwriters)
- Social media campaigns (Facebook, Instagram, Google)
- Annual St Paddy's Day event
    - At least 3 additional events to have a quarterly financial bump
- Sports: College Football, NFL, MLB and NHL
    - Look to partner with college alums/fan base for watch parties
- 6 Nations tournament
- Collaborations with local historical and tourism organizations, breweries and businesses
- Seasonal promotions for major events and holidays
- Home of the "Late Night Pie" - specials on late night, to go food

Competitive Advantages:

- Only Celtic themed establishment in Tarpon Springs
- Historic jail location creates a unique ambiance and potential tourist attraction
- Strong neighborhood pub ambiance and sports friendly environment
- Unique menu offerings which are pub staples
- Ownership experience, marketing/promotions expertise and local reputation

SWOT Analysis:

Strengths	**Weaknesses**
Unique location and theme	Small Kitchen
Great menu mix	Seasonal tourist fluctuations
Strong sports/event draw	No prior brand awareness
Indoor/outdoor flexibility	A block off the main street
Ownership Experience	
Opportunities	**Threats**
Events, live music nights	Local competition
Partner with Local Breweries	Rising costs
Food delivery expansion	Economy
	Industry Trends

Infinite Print (Next Door)

Infinite Print is a custom printing and fulfillment business specializing in apparel (direct-to-garment), signage, and promotional products. Our production is entirely indoors and operates much like a standard office or small retail shop, quiet equipment, water-based inks and eco-friendly materials, and no strong odors.

We use non-toxic, water-based inks, and all printing processes are environmentally safe. Waste is minimal and disposed of through standard practices; there is no discharge into plumbing.

Hours of operation are typical daytime business hours, so there will be no late-night activity. Noise is limited to the level of a small office (printers, phones, and light conversation) and will not interfere with other tenants or patrons.

We proudly provide services for many local businesses and print for a wide range of local establishments, supporting the community while keeping operations clean and professional.

CITY PARKING LOT

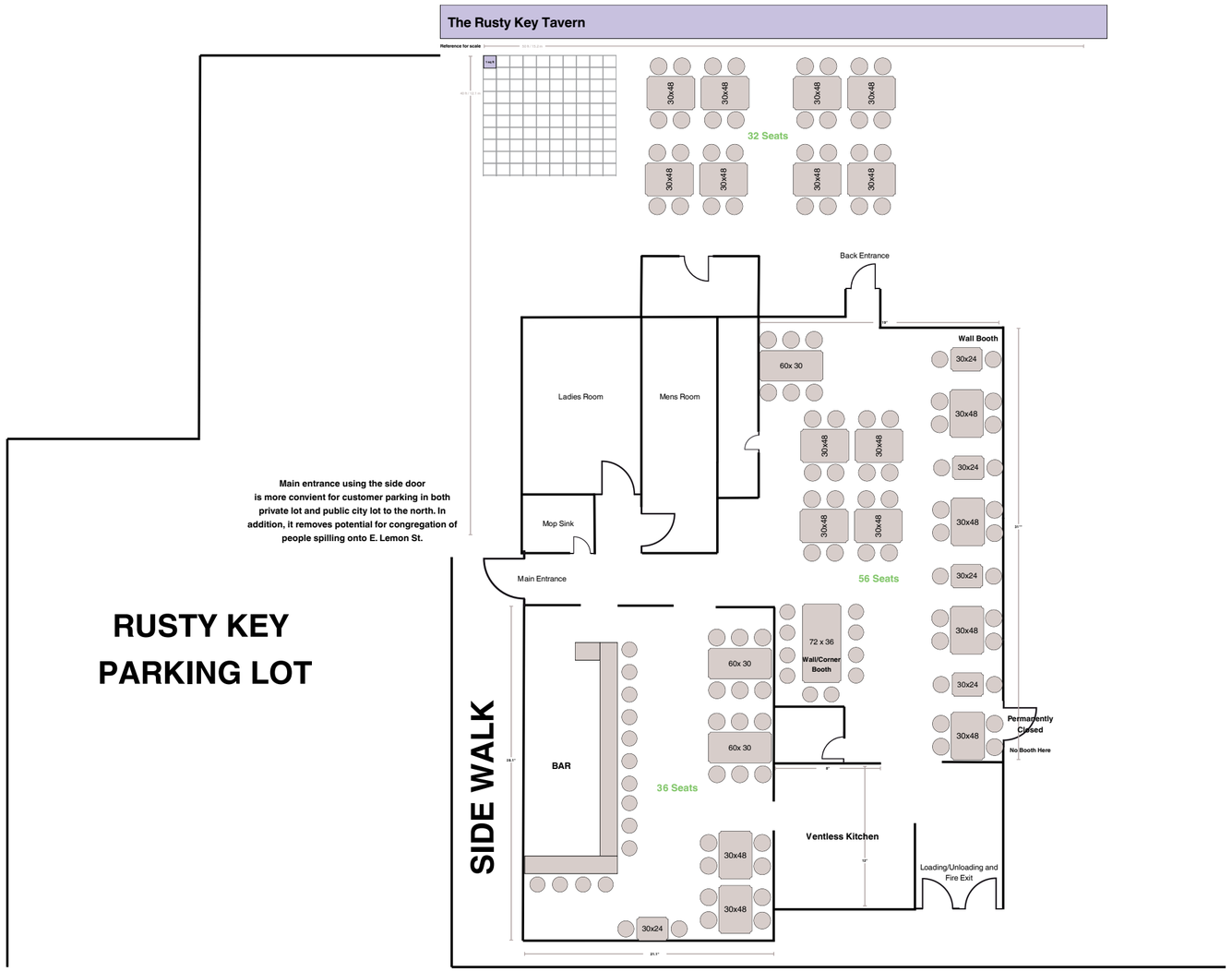

SIDE WALK

EAST LEMON ST

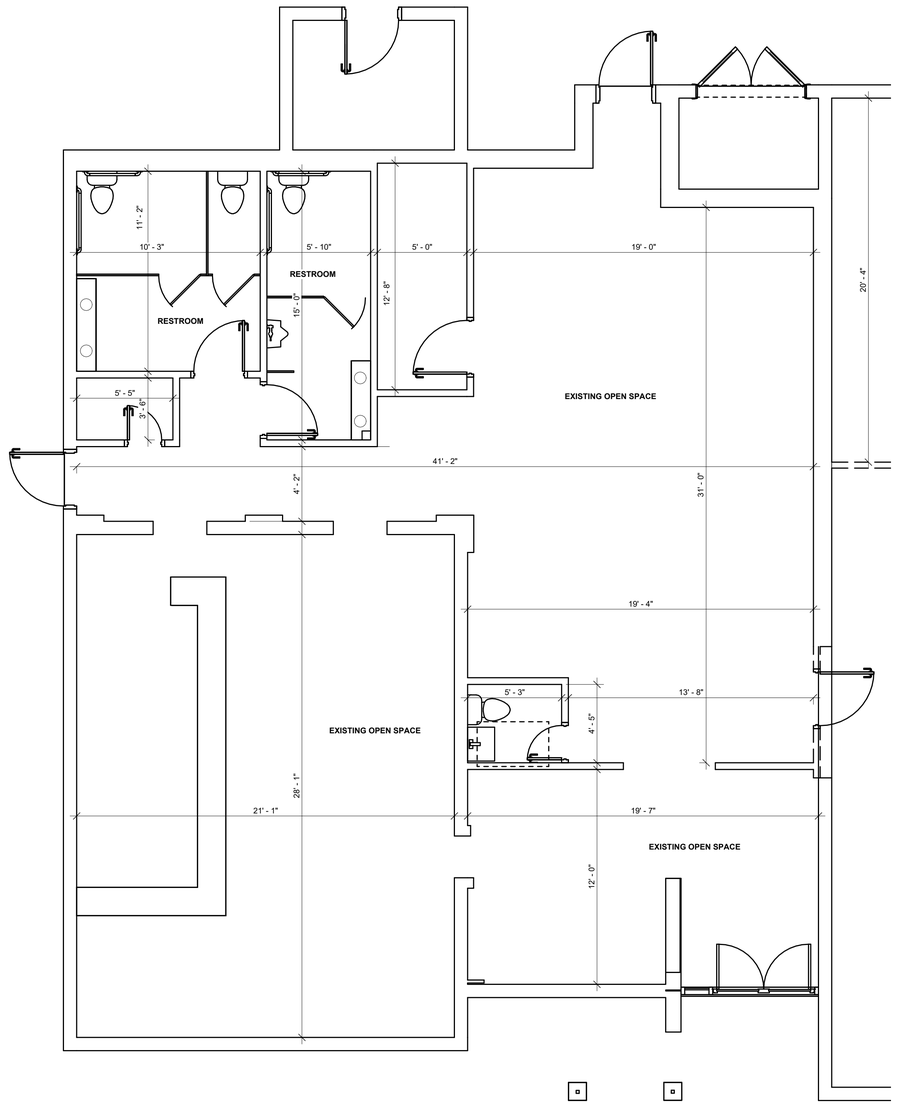

1 EXISTING FLOOR PLAN. AREA #2
1/4" = 1'-0"

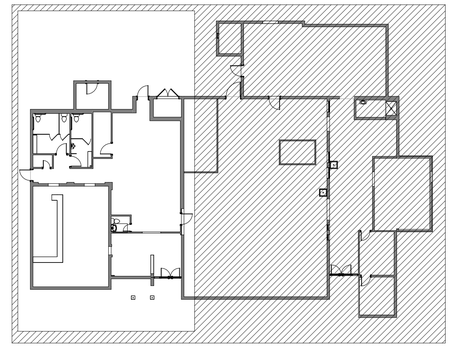

2 INDEX PLAN
1" = 20'-0"

SHARP DESIGN STUDIO
12100 RACE TRACK ROAD,UNIT Q1
TAMPA, FL 33626
OFFICE: (813)408-8404
AA26003627

THIS DRAWING IS AN INSTRUMENT OF SERVICE AND IS THE SOLE PROPERTY OF SHARP DESIGN STUDIO, LLC. ANY USE OF THIS DRAWING WITHOUT WRITTEN CONSENT BY SHARP DESIGN STUDIO, LLC IS PROHIBITED.

THE ARCHITECT SHALL NOT HAVE CONTROL OR CHARGE OF AND SHALL NOT BE RESPONSIBLE FOR CONSTRUCTION MEANS, METHODS, DEVIATIONS, TECHNIQUES, SEQUENCES, OR PROCEDURES, OR FOR SAFETY PRECAUTIONS AND PROGRAMS IN CONNECTION WITH THE WORK, FOR THE ACTS OR OMISSIONS OF THE CONTRACTOR, SUBCONTRACTORS OR ANY OTHER PERSONS PERFORMING ANY OF THE WORK, OR FOR THE FAILURE OF ANY OF THEM TO CARRY OUT THE WORK IN ACCORDANCE WITH THE CONTRACT DOCUMENTS.

DRAWINGS ARE NOT TO BE SCALED. DRAWING SCALES AS INDICATED ARE FOR REFERENCE ONLY; WRITTEN DIMENSIONS SHALL GOVERN.

CLIENT
BENJAMIN SPIEGEL

PROJECT NUMBER:

PROJECT NAME:
325 E LEMON ST. RENOVATION

PROJECT ADDRESS:
325 E LEMON ST, TARPON SPRINGS, FL 34689.

DESIGN DEVELOPMENT

DRAWN BY:
Author
ISSUE DATE:
06/30/2025

#	DESCRIPTION	DATE

DIEGO DURAN, AR99267
SCOTT B. McCLELLAND, AR93425

EXISTING FLOOR PLAN. AREA #2

A101

8/1/2025 2:28:00 PM K:\Clients\Benjamin Spiegel\325E Lemon St.bak.rvt

SECTION . . . 12 . . . , TOWNSHIP . . 27 . . . SOUTH, RANGE . . 15 . . . EAST, ... PINELLAS . . . . . COUNTY, FLORIDA

BOUNDARY SURVEY

LEGEND

- ⊠ – WATER METER
- ⋈ – WATER VALVE
- ● – UTILITY POLE
- ☘ – LAMP POST
- ——— – OVERHEAD UTILITY WIRE(S)
- ⟵ – GUY ANCHOR
- ⌀ – BOLLARD

SCALE: 1" = 20'

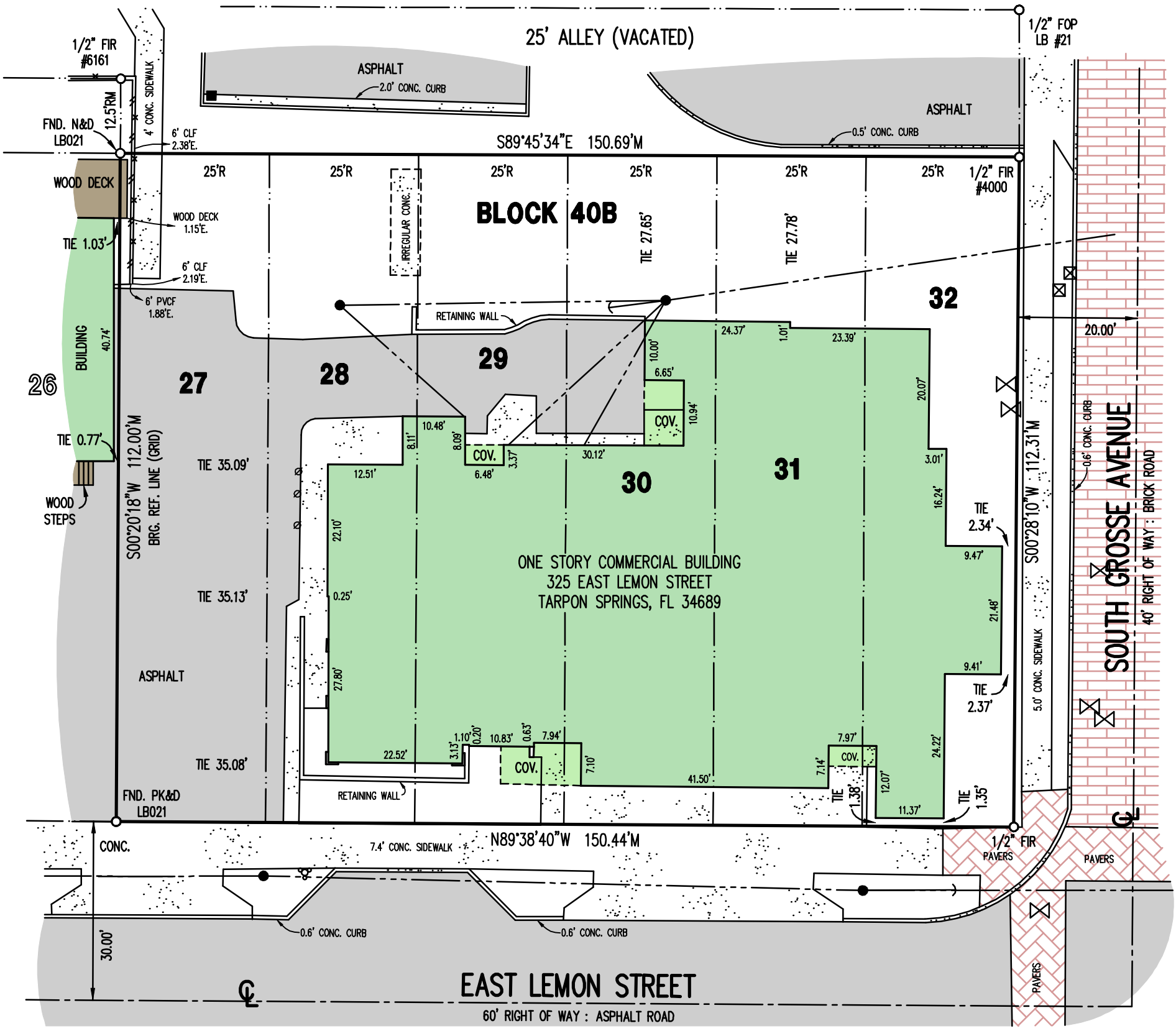

PROPERTY DESCRIPTION:
LOTS 27 THROUGH 32, INCLUSIVE, BLOCK 40B, LOT OF A.P.K. SAFFORD'S SUBDIVISION OF BLOCK NO. FORTY TARPON SPRINGS HILLSBOROUGH COUNTY, FLORIDA, ACCORDING TO THE MAP OR PLAT THEREOF AS RECORDED IN PLAT BOOK 1, PAGE 14, PUBLIC RECORDS OF HILLSBOROUGH COUNTY, FLORIDA, OF WHICH PINELLAS COUNTY WAS FORMERLY A PART.

ALSO DESCRIBED AS:
LOTS 27 THROUGH 32, INCLUSIVE, BLOCK 40B, LOT OF A.P.K. SAFFORD'S SUBDIVISION OF BLOCK NO. FORTY TARPON SPRINGS HILLSBOROUGH COUNTY, FLORIDA, ACCORDING TO THE MAP OR PLAT THEREOF AS RECORDED IN PLAT BOOK 5, PAGE 24, PUBLIC RECORDS OF PINELLAS COUNTY, FLORIDA.

FLOOD ZONE:
THE ABOVE DESCRIBED PROPERTY APPEARS TO BE IN ZONE X, IN ACCORDANCE WITH THE FIRM MAP OF PINELLAS COUNTY, FLORIDA, MAP NUMBER 12103C 0019H, REVISED 8/24/2021.

PREPARED FOR:
OLD REPUBLIC NATIONAL TITLE INSURANCE COMPANY; FOUNDATION TITLE & TRUST, LLC

CERTIFICATION: I HEREBY CERTIFY TO THE BEST OF MY KNOWLEDGE AND BELIEF THAT THE SURVEY SHOWN HEREON SUBSTANTIALLY MEETS THE STANDARDS OF PRACTICE FOR LAND SURVEYING DESCRIBED IN THE STATE OF FLORIDA RULE 5J-17, F.A.C. FURTHERMORE, THIS CERTIFICATION SHALL NOT EXTEND TO ANY OTHER PERSONS OR PARTIES OTHER THAN THOSE NAMED ON THIS SURVEY AND SHALL NOT BE VALID AND BINDING AGAINST THE UNDERSIGNED SURVEYOR WITHOUT THE ORIGINAL RAISED SEAL AND SIGNATURE OF THE FLORIDA LICENSED SURVEYOR AND MAPPER.

GREGORY A. SHIMP LB 6161 PROFESSIONAL SURVEYOR & MAPPER STATE OF FLORIDA

THE SEAL APPEARING ON THIS DOCUMENT WAS AUTHORIZED BY GREGORY A. SHIMP, PSM6161

GREGORY A. SHIMP, PROFESSIONAL SURVEYOR & MAPPER No. 6161
THIS SURVEY IS NOT COMPLETE OR VALID UNLESS ATTACHED TO SURVEYOR'S REPORT.

JOB NUMBER: 240022	DATE SURVEYED: 2/1/2024
DRAWING FILE: 240022.DWG	DATE DRAWN: 2/1/2024
LAST REVISION: N/A	X REFERENCE: N/A

GREGORY A. SHIMP, PSM, LLC
PROFESSIONAL SURVEYOR & MAPPER
7234 SHARPSBURG BLVD., NEW PORT RICHEY, FL 34653
PHONE (727) 859-2161
www.gregshimp.com gregshimp@gmail.com
LB 7981

Certificate of Concurrency Form

CITY OF TARPON SPRINGS
PLANNING & ZONING DEPARTMENT
324 E. Pine Street, Tarpon Springs, FL 34689
(727) 942-5611 / planning@ctsfl.us

INSTRUCTIONS

Please complete this form fully and **DOWNLOAD (print button)** to submit with the associated development application. Applications must be submitted **DIGITALLY** through the Planning and Zoning goPost portal.

Project Name*

The Rusty Key Tavern

Project Location*

325 East Lemon St. Tarpon Springs FL 34689

Type of Development Activity*

- [x] Conditional Use
- [ ] Final Subdivision Plat
- [ ] Planned Development - Commercial
- [ ] Planned Development - Industrial
- [ ] Planned Development - Residential
- [ ] Site Plan - Commercial Development
- [ ] Site Plan - Residential Development

Residential Project Information

Provide the applicable information below.

(Skip to the next page for non-residential projects)

Total Units

Number of Units

Single Family

Number of Units

Two-Family

Number of Units

Multifamily

Number of Units

Mobile Homes

Number of Units

Recreation Vehicle Sites

Number of Sites

Beds (ACLF, ALF, etc.)

Number of Beds

Non-Residential Project Information

Provide additional information below.

Type of Use(s)	Gross Square Footage
Restuarant/Pub	2200

Level of Service Impacts*

Provide both the existing and proposed facility usage for the following services.

This information must also be included in the site plan set.

Potable Water Existing*	Potable Water Proposed*
0	850

Sanitary Sewer Existing*	Sanitary Sewer Proposed*
0	760

Solid Waste Existing*	Solid Waste*
0	38.3

Transportation ITE Category*

932

Trips Per Day Existing*	Peak Hour Trips Existing*	Trips Per Day Proposed*	Peak Hour Trips*
0	0	280	22

Stormwater Drainage*

A separate drainage analysis will be provided for review.

☑ Acknowledged

Mobility Management*

If the proposed development project is located within deficient road corridors and generates more than 50 new peak hour trips, the following items are required:

(Refer to LDC Section 122.11.03)

- [ ] Transportation Management Plan
- [ ] Traffic Study
- [x] Does Not Apply to Proposed Project

Hurricane Shelter*

If the proposed development project is a residential development of 50 or more units and involves a site that is wholly or partially located within the Pinellas County Evacuation Zones A, B, or C, please submit the following, consistent with LDC Section 122.12:

- [ ] Hurricane Shelter Impact Analysis
- [x] Does not Apply to Proposed Project

Electronic Signatures Agreement*

By checking the **"I Agree"** box below, you agree and acknowledge that **1)** this form will not be signed in the sense of a traditional paper document, **2)** by signing in this alternate manner, you authorize your signature on this form to be valid and binding to the same force and effect as a handwritten signature, and **3)** the information included in and with this form is completely true and correct to the best of your knowledge.

- [x] I Agee

Electronic Signature* Thomas Scott

Date* 9/30/2025

Steps to Download Form

1. Click the **'Print Only'** button below.
2. Your form will open in a new tab.
3. **Right click** on your mouse and **select 'Print'**.
4. Choose to print to **'PDF'**.
5. Save the form in your desired location.

Need help? Give the Planning Department a call at 727-942-5611.

City of Tarpon Springs
Planning & Zoning Department
324 East Pine Street
Tarpon Springs, FL 34689

NOTICE OF UPCOMING PUBLIC HEARING REGARDING #25-69

Please review the information on the **reverse side** of this card carefully!! If you have any questions regarding this matter, please call our office at (727) 942-5611

«AddressBlock»



<u>Application Description</u>: The applicant is requesting conditional use to allow a restaurant with greater than 49 seats in the T4b (Residential-Industrial/Office) transect district within an existing building located at 325 E. Lemon Street.

(Please Reference Application #25-69)

Please be advised that the Planning and Zoning Board will hold one Public Hearing on **Monday, October 20, 2025** at **6:30 p.m.** and the Board of Commissioners will hold one public hearing on **Tuesday, November 4, 2025** at **6:30 p.m.** All public hearings are held in the **City Hall Auditorium which is located at 324 East Pine Street, Tarpon Springs, FL 34689.**

All interested parties are invited to attend this meeting to express their views or to present facts in the case. Written correspondence may be directed to the City of Tarpon Springs, Planning and Zoning Department, 324 East Pine Street, Tarpon Springs, FL 34688, or you may email your concerns to planning@ctsfl.us. Materials related to this application may be obtained by contacting the Planning & Zoning Department during City Hall business hours. The meeting packet and meeting instructions will be posted approximately one week prior to the meeting on the City's web site at www.ctsfl.us. Any person with a disability or without access to a computer or phone requiring reasonable accommodation in order to participate in these meetings should call (727) 942-5611 or email a written request to Planning@ctsfl.us.

MIKE TWITTY, MAI, CFA
Pinellas County Property Appraiser
www.pcpao.gov mike@pcpao.gov

Run Date: 19 Sep 2025
Subject Parcel: 12-27-15-77778-402-0270
Radius: 500 feet
Parcel Count: 95
Total pages: 15

Public information is furnished by the Property Appraiser's Office and must be accepted by the recipient with the understanding that the information received was developed and collected for the purpose of developing a Property Value Roll per Florida Statute. The Pinellas County Property Appraiser's Office makes no warranties, expressed or implied, concerning the accuracy, completeness, reliability or suitability of this information for any other particular use. The Pinellas County Property Appraiser's Office assumes no liability whatsoever associated with the use or misuse of such information.

13-27-15-06138-000-0080
BEEKMAN'S, VIOLA P. LOT 8 & W 1/2 OF LOT 9

KUKAJ, SUCRI
KUKAJ, BRIXHILDA
8602 FORT HAMILTON PKWY
BROOKLYN, NY 11209-5338

13-27-15-00000-120-0100
PT OF NE 1/4 AKA PINELLAS TRAIL DESC AS 16FT WIDE ABANDONED RR R/W RUNNING FROM N LINE OF

PINELLAS COUNTY
ATTN: SPECIAL ACCTS
315 COURT ST
CLEARWATER, FL 33756-5165

12-27-15-00000-430-0100
PT OF SE 1/4 AKA PINELLAS TRAIL BEING 16FT WIDE ABANDONED RR R/W RUNNING FROM N R/W OF PIN

PINELLAS COUNTY
ATTN: SPECIAL ACCTS
315 COURT ST
CLEARWATER, FL 33756-5165

12-27-15-27756-002-0060
FERNALD'S, L.S. BLK 2, LOT 6

PRICE, ALEXA
PRICE, ANTHONY
3051 AUTUMN DR
PALM HARBOR, FL 34683-2104

12-27-15-27756-002-0110
FERNALD'S, L.S. BLK 2, LOTS 11,12 AND 13

FOURKAS, CHRIST A
FOURKAS, DIANNA K
210 ALBION AVE
PARK RIDGE, IL 60068-4912

12-27-15-52218-000-0100
LITTLE GREECE LOTS 10,11 AND 12

TRUIST BANK
C/O SUNTRUST BANK LEASE ADMIN
PO BOX 26665, VA-RIC-8614
RICHMOND, VA 23261-6665

12-27-15-52236-000-0010
LITTLE GREECE RESUB LOTS 1,2,3,1A,2A,3A & LOT 15 OF LITTLE GREECE SUB

TRUIST BANK
C/O SUNTRUST BANK LEASE ADMIN
PO BOX 26665, VA-RIC-8614
RICHMOND, VA 23261-6665

12-27-15-90000-000-0130
TARPON SPRINGS RESUB OF BLK 30 LOTS 13,14 AND 15

LUCKEY, JAMES MILTON JR RES MAR QUAL TRUST
LUCKEY, MARY H TRE
1208 MUIRFIELD CT
TARPON SPRINGS, FL 34688-6307

12-27-15-77778-401-0080
SAFFORD'S, A.P.K. BLK 40A, S 50FT OF LOT 8 LESS W 3FT & W 10FT OF S 50FT OF LOT 7

PAPPAS, LOUIS L
TARAPANI, JOHN K
1648 SEABREEZE DR
TARPON SPRINGS, FL 34689-2028

12-27-15-90000-000-0170
TARPON SPRINGS RESUB OF BLK 30 LOT 17

ZISSIMOPULOS, GUY N
ZISSIMOPULOS, SARA
922 SEMINOLE BLVD
TARPON SPRINGS, FL 34689-2439

13-27-15-06138-000-0020
BEEKMAN'S, VIOLA P. LOTS 2,3 & 4

DUFF, TROY C TRE
DUFF, TERESA L TRE
429 INNESS DR
TARPON SPRINGS, FL 34689-2539

12-27-15-77778-401-0140
SAFFORD'S, A.P.K. BLK 40A, LOTS 14 AND 17

DAMALOS PROPERTIES LLC
DAMALOS, STAMATIS
78 INNESS DR
TARPON SPRINGS, FL 34689-2553

13-27-15-06138-000-0010
BEEKMAN'S, VIOLA P. LOT 1

LONTAKOS, PETER M TRE
LONTAKOS, MARTHA TRE
1451 MERES BLVD
TARPON SPRINGS, FL 34689-2880

13-27-15-06138-000-0110
BEEKMAN'S, VIOLA P. LOT A

LONTAKOS, PETER M TRE
LONTAKOS, MARTHA TRE
1451 MERES BLVD
TARPON SPRINGS, FL 34689-2880

12-27-15-77778-401-0091
SAFFORD'S, A.P.K. BLK 40A, W 3FT OF S 50FT OF LOT 8 & S 50FT OF LOTS 9 THRU 11

BAKER, D REVOCABLE TRUST
BAKER, DONNA TRE
1120 ELMENDORF TRCE
TARPON SPRINGS, FL 34689-2920

12-27-15-89982-029-0107
TARPON SPRINGS OFFICIAL MAP BLK 29, BEG 100FT W OF SE COR OF LOT 1 RUN N 150FT W 50FT S 15

TARPON SPRINGS BUILDING COMPANY LLC
SOPHA, DOUGLAS
321 E TARPON AVE
TARPON SPRINGS, FL 34689-4319

12-27-15-77778-402-0010
SAFFORD'S, A.P.K. BLK 40B, LOTS 1 AND 2

MARKS, JOSEPH ANTHONY
MARKS, DIANA C
320 E TARPON AVE
TARPON SPRINGS, FL 34689-4320

12-27-15-27756-001-0060
FERNALD'S, L.S. BLK 1, LOT 6

NAVAS, LISA MARIE
NAVAS, ELAINE MAE
428 E TARPON AVE
TARPON SPRINGS, FL 34689-4322

12-27-15-27756-001-0090
FERNALD'S, L.S. BLK 1, LOT 9 AND W 1/2 OF LOT 8

WOOD, MARK H
WOOD, STEPHANIE
412 E TARPON AVE
TARPON SPRINGS, FL 34689-4322

12-27-15-27756-001-0070
FERNALD'S, L.S. BLK 1, LOT 7 AND E 1/2 OF LOT 8

RUNKLE, JOSHUA A
DEMICCO-RUNKLE, BRANDY M
420 E TARPON AVE
TARPON SPRINGS, FL 34689-4322

12-27-15-89982-029-0100
TARPON SPRINGS OFFICIAL MAP BLK 29, BEG AT NE COR OF LOT 1 RUN S 150 FT W 150FT N 150FT E

SUBIC LIVING TRUST
SUBIC, ROBERT C TRE
334 E ORANGE ST
TARPON SPRINGS, FL 34689-4351

12-27-15-89982-029-0102
TARPON SPRINGS OFFICIAL MAP BLK 29, FROM NE COR OF LOT 1 RUN S 150FT TH W 175FT FOR POB TH

MIHALAKIS, THEODORA
PAPADOPOULOS, NIKOLAS
312 E ORANGE ST UNIT C
TARPON SPRINGS, FL 34689-4374

13-27-15-01692-002-0050
ATHENS SUB BLK 2, LOTS 5,6 & 7

FINLEY FAMILY TRUST
FINLEY, RODEAN TRE
214 E BOYER ST
TARPON SPRINGS, FL 34689-4402

13-27-15-06138-000-0120
BEEKMAN'S, VIOLA P. LOT B & E 1/4 OF LOT 10 & VAC 10FT ALLEY E OF LOT B

O'BRIEN, DAVID J
O'BRIEN, JUDITH M
417 E BOYER ST
TARPON SPRINGS, FL 34689-4405

13-27-15-32508-001-0080
GRAMMER & SMITH OAKHILL BLK 1, LOT 8 & PT OF LOT 7 ALL BEING DESC AS BEG SE COR OF LOT 8 T

MILES, MAGGIE B
MILES, ANDREZJ L
433 E BOYER ST
TARPON SPRINGS, FL 34689-4405

13-27-15-06138-000-0050
BEEKMAN'S, VIOLA P. LOT 5

KARANTONIS, DAWN M
KARANTONIS, GREGORY J
698 BAYCOVE DR
TARPON SPRINGS, FL 34689-7000

13-27-15-25272-000-0170
EDMONDSON'S SUB LOT 17

HUDSON, PATSY EST
312 E BOYER ST
TARPON SPRINGS, FL 34689-4404

12-27-15-77778-401-0071
SAFFORD'S, A.P.K. BLK 40A, FROM A PT 5 FT E OF NW COR OF LOT 11 TH E 74 FT TO POB TH E 51

HISTORICAL PROPERTIES INC
1648 SEABREEZE DR
TARPON SPRINGS, FL 34689-2028

13-27-15-01692-001-0020
ATHENS SUB BLK 1, E 20FT OF LOT 2

3303 DDG GRACE LLC
713 BAYSHORE DR
TARPON SPRINGS, FL 34689-2406

12-27-15-77778-402-0060
SAFFORD'S, A.P.K. BLK 40B, LOTS 6 AND 7

UNREFINED HOLDINGS LLC
15205 ARBOR HOLLOW DR
ODESSA, FL 33556-3146

13-27-15-25272-000-0100
EDMONDSON'S SUB LOT 10 & W 1/2 OF LOT 11 INCL E 1/2 OF VAC MARYLAND ST

BASS, MARCUS
610 N WALTON AVE
TARPON SPRINGS, FL 34689-4126

12-27-15-89982-039-0001
TARPON SPRINGS OFFICIAL MAP BLK 39, BEG AT SE COR OF TARPON & GROSSE AVE TH E 85FT TH S 18

PREYDE, CYNTHIA L
400 E TARPON AVE
TARPON SPRINGS, FL 34689-4322

12-27-15-27756-001-0040
FERNALD'S, L.S. BLK 1, LOT 4

PATSALIDES, HARRY
70 WILLOWWOOD LN
OLDSMAR, FL 34677-2058

12-27-15-89982-029-0109
TARPON SPRINGS OFFICIAL MAP BLK 29, BEG AT SE COR OF LOT 1 RUN N 150FT W 50FT S 150FT E 50

TARPON SPRINGS BUILDING COMPANY LLC
321 E TARPON AVE
TARPON SPRINGS, FL 34689-4319

12-27-15-90000-000-0180
TARPON SPRINGS RESUB OF BLK 30 LOTS 18 & 19

9200 49TH STREET LLC
861 N HERCULES AVE
CLEARWATER, FL 33765-2025

13-27-15-01692-002-0020
ATHENS SUB BLK 2, LOTS 2,3 AND 4

FINLEY, RODEAN
214 E BOYER ST
TARPON SPRINGS, FL 34689-4402

13-27-15-25272-000-0180
EDMONDSON'S SUB LOT 18

HUDSON, GUS EST
312 E BOYER ST
TARPON SPRINGS, FL 34689-4404

12-27-15-77778-401-0190
SAFFORD'S, A.P.K. BLK 40A, LOTS 19 AND 20

P D L LLC
PO BOX 971
CRYSTAL BEACH, FL 34681

12-27-15-77778-401-0150
SAFFORD'S, A.P.K. BLK 40A, LOTS 15 AND 16

NEPTUNE HOLDINGS CORP
13 SAFFORD AVE
TARPON SPRINGS, FL 34689

12-27-15-77778-401-0040
SAFFORD'S, A.P.K. BLK 40A, W.6FT OF N 60FT OF LOTS 3 & ALL OF LOTS 4 & 5

TARPON T K O LLC
35595 US HIGHWAY 19 N STE 873
PALM HARBOR, FL 34684-1702

13-27-15-01692-001-0010
ATHENS SUB BLK 1, E 26.29FT OF LOT 1

3303 DDG GRACE LLC
713 BAYSHORE DR
TARPON SPRINGS, FL 34689-2406

12-27-15-77778-402-0200
SAFFORD'S, A.P.K. BLK 40B, LOT 20 & S 15FT OF LOT 19 TOGETHER WITH W 137.5FT OF N 1/2 OF V

TARPON SPRINGS, CITY OF
PO BOX 5004
TARPON SPRINGS, FL 34688-5004

12-27-15-89982-029-0105
TARPON SPRINGS OFFICIAL MAP THAT PART OF BLK 29, LOT 1 DESC BEG SW COR OF SD LOT 1 TH N'LY

KDA PROPERTIES LLC
11 E TARPON AVE
TARPON SPRINGS, FL 34689-3449

12-27-15-27756-002-0090
FERNALD'S, L.S. BLK 2, LOT 9 AND W 1/2 OF LOT 8

TARPON SPRINGS BUILDING COMPANY LLC
321 E TARPON AVE UNIT 202
TARPON SPRINGS, FL 34689-4319

12-27-15-27756-002-0070
FERNALD'S, L.S. BLK 2, LOT 7 AND E 1/2 OF LOT 8

NAVAS, ELAINE M
435 E LEMON ST
TARPON SPRINGS, FL 34689-4379

13-27-15-01692-001-0021
ATHENS SUB BLK 1, W 65FT OF LOT 2

3303 DDG GRACE LLC
713 BAYSHORE DR
TARPON SPRINGS, FL 34689-2406

12-27-15-77778-401-0300
SAFFORD'S, A.P.K. BLK 40A, PT OF LOTS 30, 31 & 32 & PT OF VAC ALLEY ADJ TO SD LOTS ALL DES

LYONS, JON E JR
124 S RING AVE
TARPON SPRINGS, FL 34689-4316

12-27-15-77778-401-0010
SAFFORD'S, A.P.K. BLK 40A, S 75FT OF LOTS 1, 2, AND 3

TARPON T K O LLC
35595 US HIGHWAY 19 N STE 873
PALM HARBOR, FL 34684-1702

13-27-15-25272-000-0130
EDMONDSON'S SUB LOTS 13 & 14

DHM INVESTMENT PROPERTIES II LLC
3633 FIDDLERS GREEN LOOP
WESLEY CHAPEL, FL 33544-7300

12-27-15-89982-042-0300
TARPON SPRINGS OFFICIAL MAP BLK 42, LOT 3 LESS R/W FOR BOYER ST TOGETHER WITH LOTS 7 THRU

TARPON SPRINGS HOUSING AUTH
500 S WALTON AVE
TARPON SPRINGS, FL 34689-4714

13-27-15-25272-000-0110
EDMONDSON'S SUB LOTS 11 & 12 LESS W 1/2 OF LOT 11

RICKETTS, LEASON
8811 SE 79TH AVENUE RD
OCALA, FL 34472-3034

13-27-15-06138-000-0060
BEEKMAN'S, VIOLA P. LOTS 6 AND 7

LUXO PROPERTY GROUP II LLC
1314 CRIMSON CLOVER LN
WESLEY CHAPEL, FL 33543-6575

12-27-15-27756-002-0100
FERNALD'S, L.S. BLK 2, LOT 10

ACCENTO CRAFT INC
3076 EASTLAND BLVD UNIT 111
CLEARWATER, FL 33761-4146

13-27-15-32508-001-0050
GRAMMER & SMITH OAKHILL BLK 1, LOT 5

GRAY, CLYDE BENTON
PO BOX 166
TARPON SPRINGS, FL 34688-0166

12-27-15-27756-002-0050
FERNALD'S, L.S. BLK 2, LOT 5

COLOSSI, BETTY
2933 GLEN HAVEN DR
PALM HARBOR, FL 34684-3200

12-27-15-27756-002-0030
FERNALD'S, L.S. BLK 2, LOTS 3 & 4

ZUTES PROPERTIES INC
46 W LEMON ST
TARPON SPRINGS, FL 34689-3622

12-27-15-89982-029-0108
TARPON SPRINGS OFFICIAL MAP BLK 29, W 50FT OF E 100FT OF S 150FT OF LOT 1 (MAP S-12-27-15)

SOUTH COAST PREMIER PROPERTIES LLC
14 DORCHESTER GRN
LAGUNA NIGUEL, CA 92677-9375

12-27-15-90000-000-0160
TARPON SPRINGS RESUB OF BLK 30 LOT 16

9200 49TH STREET LLC
861 N HERCULES AVE
CLEARWATER, FL 33765-2025

12-27-15-77778-402-0150
SAFFORD'S, A.P.K. BLK 40B, LOTS 15 & 16 & N 10FT OF LOT 19

SAINT SOMEWHERE FARMHOUSE BREWING LLC
1248 LORI DR
SPRING HILL, FL 34606

12-27-15-89982-042-0302
TARPON SPRINGS OFFICIAL MAP BLK 42, PART OF LOT 3 DESC FROM INTERSEC OF E R/W OF GROSSE AV

TARPON SPRINGS HOUSING AUTH
500 S WALTON AVE
TARPON SPRINGS, FL 34689-4714

13-27-15-06138-000-0100
BEEKMAN'S, VIOLA P. E 1/2 OF LOT 9 AND W 3/4 OF LOT 10

THOMPSON, GLORIA J
409 E BOYER ST
TARPON SPRINGS, FL 34689-4405

13-27-15-32508-001-0010
GRAMMER & SMITH OAKHILL BLK 1, LOTS 1 THRU 4

FRUIT BOWL LAND TRUST
6156 KRISTA DR
SPRING HILL, FL 34609-8955

12-27-15-77778-401-0060
SAFFORD'S, A.P.K. BLK 40A, LOT 6 LESS W 5FT OF N 85FT THEREOF

DINA MONSTER INC
1304 RIDGE TOP DR
TARPON SPRINGS, FL 34688-8148

12-27-15-77778-401-0301
SAFFORD'S, A.P.K. BLK 40A, PART OF LOTS 30, 31 & 32 DESC BEG SW COR SD LOT 30 TH N00D08'12

229 E LEMON STREET LLC
556 ANCLOTE RD
TARPON SPRINGS, FL 34689-6701

12-27-15-77778-401-0011
SAFFORD'S, A.P.K. BLK 40A, N 60FT OF LOTS 1, 2 & 3 LESS W .6FT OF N 60FT OF LOT 3

TARPON T K O LLC
35595 US HIGHWAY 19 N STE 873
PALM HARBOR, FL 34684-1702

13-27-15-01692-001-0110
ATHENS SUB BLK 1, LOTS 11 THRU 16 TOGETHER WITH E 1/2 OF VAC 10FT N/S ALLEY W OF LOT 11 &

TARPON SPRINGS HOUSING AUTH
500 S WALTON AVE
TARPON SPRINGS, FL 34689-4714

12-27-15-77778-402-0220
SAFFORD'S, A.P.K. BLK 40B, LOTS 22 THRU 26 INCL TOGETHER WITH S 1/2 OF VAC 25FT R/W ADJ ON

KOKOROOS LLC
876 W BAYSHORE DR
TARPON SPRINGS, FL 34689-2448

12-27-15-77778-402-0140
SAFFORD'S, A.P.K. BLK 40B, LOTS 14, 17, 18 & 21 TOGETHER WITH E 137.5FT OF N 1/2 OF VAC 25

TARPON SPRINGS, CITY OF
PO BOX 5004
TARPON SPRINGS, FL 34688-5004

12-27-15-89982-029-0104
TARPON SPRINGS OFFICIAL MAP BLK 29, BEG 100FT S OF NW COR OF LOT 1 RUN E 85FT S 50FT W 85F

MASONIC LODGE 112 TARPON LODGE F & A M
26 N RING AVE
TARPON SPRINGS, FL 34689

13-27-15-25272-000-0010
EDMONDSON'S SUB LOTS 1 AND 2

A S K R ENTERPRISES LLC
338 E LEMON ST
TARPON SPRINGS, FL 34689-4310

12-27-15-27756-001-0050
FERNALD'S, L.S. BLK 1, LOT 5

OPPORTUNITY TARPON INC
1642 SEA BREEZE DR
TARPON SPRINGS, FL 34689-2028

13-27-15-01692-001-0030
ATHENS SUB BLK 1, LOTS 3 THRU 10 TOGETHER WITH W 1/2 OF VAC 10FT N/S ALLEY E OF LOTS 5-10

TARPON SPRINGS HOUSING AUTH
500 S WALTON AVE
TARPON SPRINGS, FL 34689-4714

12-27-15-77778-401-0180
SAFFORD'S, A.P.K. BLK 40A, LOTS 18 & 21 & PT OF 25FT VAC ALLEY DESC AS BEG SE COR OF LOT 2

BLODGETT LLC
13838 WALCOTT AVE
ORLANDO, FL 32827-7416

13-27-15-25272-000-0060
EDMONDSON'S SUB W 23.7FT MOL OF LOT 6

3303 DDG GRACE LLC
713 BAYSHORE DR
TARPON SPRINGS, FL 34689-2406

13-27-15-01692-001-0170
ATHENS SUB BLK 1, LOT 17 TOGETHER WITH EDMONDSON'S SUB LOT 7

Z-BEST CONSTRUCTION & DESIGN INC
922 SEMINOLE BLVD
TARPON SPRINGS, FL 34689-2439

12-27-15-77778-402-0080
SAFFORD'S, A.P.K. BLK 40B, LOTS 8 AND 9

BLACK & WHITE MILL LLC
2807 NORTHCOTE DR
PALM HARBOR, FL 34684-4227

13-27-15-25272-000-0030
EDMONDSON'S SUB LOT 3

STILL STUDIO INC
324 E LEMON ST
TARPON SPRINGS, FL 34689-4310

12-27-15-89982-029-0101
TARPON SPRINGS OFFICIAL MAP BLK 29, BEG 150FT W OF NE COR OF LOT 1 RUN S 150FT W 50FT N 15

PRICE EQUITIES LLC
1906 GULF BEACH BLVD
TARPON SPRINGS, FL 34689-2258

12-27-15-89982-029-0106
TARPON SPRINGS OFFICIAL MAP BLK 29, BEG 150FT W OF SE COR OF LOT 1 RUN N 150FTTH W 70FT TH

309 E TARPON AVE LLC
556 ANCLOTE RD
TARPON SPRINGS, FL 34689-6701

12-27-15-89982-042-0303
TARPON SPRINGS OFFICIAL MAP BLK 42, PART OF LOT 3 DESC FROM INTERSEC OF E R/W OF GROSSE AV

TARPON SPRINGS HOUSING AUTH
500 S WALTON AVE
TARPON SPRINGS, FL 34689-4714

12-27-15-90000-000-0110
TARPON SPRINGS RESUB OF BLK 30 S 50FT OF LOT 12 & S 50FT OF W 1/2 OF LOT 11

MILLER, ARCHIE C JR TRE
925 OAKVIEW RD
TARPON SPRINGS, FL 34689-2609

13-27-15-25272-000-0150
EDMONDSON'S SUB LOTS 15 & 16 & INCL VAC MARYLAND ST BETWEEN SAID LOTS

D H M INVESTMENT PROPERTIES LLC
3633 FIDDLERS GREEN LOOP
WESLEY CHAPEL, FL 33544-7300

12-27-15-77778-401-0280
SAFFORD'S, A.P.K. BLK 40A, LOTS 28 & 29 & S OF 1/2 VAC ALLEY ON N

OPPORTUNITY TARPON INC
1642 SEA BREEZE DR
TARPON SPRINGS, FL 34689-2028

12-27-15-77778-402-0030
SAFFORD'S, A.P.K. BLK 40B, LOTS 3, 4 AND 5

SOUTH COAST PREMIER PROPERTIES LLC
14 DORCHESTER GRN
LAGUNA NIGUEL, CA 92677-9375

12-27-15-89982-029-0110
TARPON SPRINGS OFFICIAL MAP BLK 29, THAT PART OF LOT 1 DESC COM SW COR OF SD LOT 1 TH N 82

18 N RING LLC
18 N RING AVE
TARPON SPRINGS, FL 34689-4304

13-27-15-32508-001-0060
GRAMMER & SMITH OAKHILL BLK 1, LOT 6

R O E C CLUB INC
438 LEMON ST
TARPON SPRINGS, FL 34689-4312

13-27-15-01692-002-0010
ATHENS SUB BLK 2, LOT 1

SHACKELFORD, KHARON EST
302 E BOYER ST
TARPON SPRINGS, FL 34689-4404

12-27-15-77778-401-0090
SAFFORD'S, A.P.K. BLK 40A, BEG AT A PT 5 FT E OF NW COR OF LOT 11 TH E 74 FT TH S 85 FT TH

HISTORICAL PROPERTIES INC
1648 SEABREEZE DR
TARPON SPRINGS, FL 34689-2028

12-27-15-77778-401-0220
SAFFORD'S, A.P.K. BLK 40A, LOTS 22 TO 26 INCL

P D L LLC
PO BOX 971
CRYSTAL BEACH, FL 34681-0971

13-27-15-01692-001-0011
ATHENS SUB BLK 1, W 63.71FT OF LOT 1

3303 DDG GRACE LLC
713 BAYSHORE DR
TARPON SPRINGS, FL 34689-2406

12-27-15-77778-402-0100
SAFFORD'S, A.P.K. BLK 40B, LOTS 10 & 11

LINDIAKOS, MANUEL N PA
222 E TARPON AVE
TARPON SPRINGS, FL 34689-4318

13-27-15-25272-000-0040
EDMONDSON'S SUB LOTS 4 & 5 & E 24.3 FT OF LOT 6

3303 DDG GRACE LLC
713 BAYSHORE DR
TARPON SPRINGS, FL 34689-2406

13-27-15-25272-000-0080
EDMONDSON'S SUB LOTS 8 & 9

BASS, MARCUS
610 N WALTON AVE
TARPON SPRINGS, FL 34689-4126

13-27-15-32508-001-0070
GRAMMER & SMITH OAKHILL BLK 1, W PT OF LOT 7 DESC AS BEG SW COR OF SAID LOT TH N 137.5FT T

JONES, DEBORAH K
429 E BOYER ST
TARPON SPRINGS, FL 34689-4405

12-27-15-27756-001-0010
FERNALD'S, L.S. BLK 1, LOTS 1, 2 AND 3

VINSON, DANIEL B
1334 RIVERSIDE AVE
TARPON SPRINGS, FL 34689-6613

Memorandum

Date: December 9, 2025
To: Mayor and Board of Commissioners
Through: Charles Rudd, City Manager
From: Renea Vincent, Planning Director
Subject: **Resolution 2025-65; (Quasi-Judicial)** Site Plan Approval for construction of a 13,057 square foot medical and general office building on property located at 1098 South Pinellas Avenue (Application 23.154)**(Renea Vincent, Planning and Zoning Director)**

Recommendation

Staff recommends approval with the following warrants and conditions:
Staff recommends **approval of Resolution 2025-65**, subject to the following warrant and conditions

Warrants

1. To allow use of a planted hedge row as a streetscreen along the Meres Boulevard frontage.

Conditions

1. Site construction and vertical building permits must be applied for simultaneously. The intent of this condition is to prevent premature fill deposition and seawall construction. The Site Plan approval shall expire at six months from the effective date unless a Site Construction Permit and a Building Permit are both obtained and kept active.
2. Dry floodproofing requirements shall be addressed with submittal of a building permit application. The submittal shall include plans and documents covering flood-proofing and muti-tenant flood-proofing management to the satisfaction of the Floodplain Administrator and the Building Official, including recording of all attendant covenants on the property needed to ensure that these requirements are met.
3. The developer is responsible for securing all other jurisdictional permits and approvals to be submitted with the site construction permit application including, but not limited to, permits from the U.S. Army Corps of Engineers and the Pinellas County Water and Navigation Authority.
4. All plant material installed along the rights-of-way of South Pinellas Ave and Meres Blvd shall meet state and county requirements for vertical clearance at planting. All Brazilian pepper (*Schinus terebinthifolius*) and Australian pine trees (*Casuarina* spp.) must be eradicated from the site and the site kept free of these species in perpetuity.
5. The driveway access point shall be reduced from 30 feet in width to 24 feet in width.
6. This parcel shall be master metered and shall use an above ground reduced pressure meter assembly. The contractor shall field verify utilities and the contractor shall complete and install both potable water and sanitary sewer taps. The City requires 48 hours notice prior to any work completed on the mains. Any adjustments to the utilities due to the project are the contractor’s responsibility. All restoration is the contractor's responsibility.

Background

The applicant is requesting Site Plan approval to build a 13,057 square foot medical and general office building with parking and drainage facilities. The 1.83-acre site includes 1.20 acres of wetlands and submerged lands. Two resolutions for development of this property have been approved in the past by the Board of Commissioners:

Resolution 2010-33, Site Plan #10-20, was approved on July 6, 2010 for a "multi-tenant commercial establishment." To mitigate the proposed wetland impacts, the applicant constructed a wetland mitigation project at the City's North Anclote River Nature Park, completed in February 2015. However, the approved commercial project at 1098 South Pinellas Avenue was never built. The wetland mitigation is now in its 10th year and has been reported as successful in the latest (August 2025) monitoring report.

Resolution 2020-08, Site Plan #18-128, was approved on May 12, 2020 for a "medical and general office building of approximately 13,057 square feet in gross floor area" (identical to the current application). The 2020 project was also never built.
The applicant submitted a new Site Plan application for the current project on December 15, 2023.



Planning and Zoning Board Recommendation
The Planning and Zoning Board reviewed this application at their regular meeting of November 17, 2025 with a full board present. The Board voted to recommend approval of the project with two members dissenting. The Board's motion included the following recommendations:

- Omit staff-recommended condition #3.

- Revise condition #1 to allow for separate (not simultaneous) application and issuance of the Site Construction and the Building (vertical) Construction permits, and, for the City to provide adequate time to obtain agency permits and a driveway width variance.
- Modify condition #4 to allow for the variance request.

Resolution 2025-65 has been modified to address these recommended changes. The resolution, in strike-through/underline format is included in the agenda packet.

Funding

Not applicable.

Strategic Plan Objective

Not applicable.

CITY OF TARPON SPRINGS
PLANNING & ZONING BOARD / BOARD OF COMMISSIONERS
[NOVEMBER 17, 2025 / DECEMBER 9, 2025]

STAFF REPORT
November 10, 2025

Application No. / Project Title:	#23-154 / The Shoppes At Meres
Staff:	Patricia L. McNeese, AICP, Planning Supervisor
Applicant / Owner:	Juniper Development, LLC
Agent:	Sycamore Engineering, Inc – J.D. Alsabbagh
Property Size:	approx. 0.63 acres (27,443 square feet) of uplands approx. 1.20 acres (52,272 square feet) of wetlands/submerged land
Current Zoning:	Special Area Plan/T5a (South Pinellas Ave) Transect District
Current Character District:	South Gateway
Current Land Use:	Activity Center
Location / Parcel ID:	1098 S Pinellas Ave / 13-27-15-89946-007-0010
Resolution Number:	#2025-65

BACKGROUND SUMMARY:
The applicant is requesting Site Plan approval to build a 13,057 square foot medical and general office building with parking and drainage facilities. The 1.83-acre site includes 1.20 acres of wetlands and submerged lands. Two resolutions for development of this property have been approved in the past by the Board of Commissioners:

- Resolution 2010-33, Site Plan #10-20, was approved on July 6, 2010 for a "multi-tenant commercial establishment." To mitigate the proposed wetland impacts, the applicant constructed a wetland mitigation project at the City's North Anclote River Nature Park, completed in February 2015. However, the approved commercial project at 1098 South Pinellas Avenue was never built. The wetland mitigation is now in its 10th year and has been reported as successful in the latest (August 2025) monitoring report.
- Resolution 2020-08, Site Plan #18-128, was approved on May 12, 2020 for a "medical and general office building of approximately 13,057 square feet in gross floor area" (identical to the current application). The 2020 project was also never built.
- The applicant submitted a new Site Plan application for the current project on December 15, 2023.

PRELIMINARY STAFF RECOMMENDATION:
Staff recommends **approval of Resolution 2025-65**, subject to the following warrant and conditions

Warrants
1. To allow use of a planted hedge row as a streetscreen along the Meres Boulevard frontage.

Conditions

1. Site construction and vertical building permits must be applied for simultaneously. The intent of this condition is to prevent premature fill deposition and seawall construction. The Site Plan approval shall expire at six months from the effective date unless a Site Construction Permit and a Building Permit are both obtained and kept active.
2. Dry floodproofing requirements shall be addressed with submittal of a building permit application. The submittal shall include plans and documents covering flood-proofing and muti-tenant flood-proofing management to the satisfaction of the Floodplain Administrator and the Building Official, including recording of all attendant covenants on the property needed to ensure that these requirements are met.
3. The developer is responsible for securing all other jurisdictional permits and approvals to be submitted with the site construction permit application including, but not limited to, permits from the U.S. Army Corps of Engineers and the Pinellas County Water and Navigation Authority.
4. All plant material installed along the rights-of-way of South Pinellas Ave and Meres Blvd shall meet state and county requirements for vertical clearance at planting. All Brazilian pepper (*Schinus terebinthifolius*) and Australian pine trees (*Casuarina* spp.) must be eradicated from the site and the site kept free of these species in perpetuity.
5. The driveway access point shall be reduced from 30 feet in width to 24 feet in width.
6. This parcel shall be master metered and shall use an above ground reduced pressure meter assembly. The contractor shall field verify utilities and the contractor shall complete and install both potable water and sanitary sewer taps. The City requires 48 hours notice prior to any work completed on the mains. Any adjustments to the utilities due to the project are the contractor's responsibility. All restoration is the contractor's responsibility.

CURRENT PROPERTY INFORMATION:

Use of Property:	Vacant
Site Features:	Disturbed uplands, mangrove wetlands and submerged land
Vehicle Access:	This property gains access from Apricot Court

SURROUNDING ZONING & USE:

	Zoning:	**Use:**
North:	T5a (South Pinellas Ave)	Vacant
South:	Residential Office	Vacant
East:	SDa (South Gateway)	Shopping center, restaurant
West:	T4c (Residential High)	Vacant

PLANNING CONSIDERATIONS:
When considering this application, the following general site conditions, planning concepts, and other facts should be noted:

1. The property is located in the Special Area Plan and is governed by the "Transect-Based Infill Code for the Sponge Docks and Community Redevelopment Area" ("Smartcode"). The application was submitted prior to the adoption of the 2045 Comprehensive Plan and has been processed under the preceding 2025 Comprehensive Plan.
2. The applicant's project will impact 0.98 acres (82%) of on-site wetlands. The proposed impacts were permitted by state and federal agencies in 2014 but the original project was never built. The mitigation for wetland impacts, however, *was* built at the City's North Anclote River Nature Park. The federal permit is expired, and the applicant has applied for a new permit. The state permit remains active. The applicant has also submitted a permit application to Pinellas County for approval of proposed wetland impacts.
3. The applicant proposes to build the multi-tenant building below the minimum required base flood elevation of AE-9. Dry floodproofing of the building is required. The City generally discourages multi-tenant dry-floodproofing methods. However, the Federal Emergency Management Agency (FEMA) allows this method (Reference FEMA P-936, Design Considerations in Floodproofing, 44 CFR, ASCE 24 and FBC 2023, 8th ed. (effective 12/31/23)). The required base flood elevation is 10 feet. The proposed elevation (finished floor of the building) is 7 feet. City staff referred the applicant to Smartcode Section 4.10 Elevated Structures Design Guidelines to provide guidance for an elevated building design. However the applicant chose not to alter the plans and choosing the dry floodproofing method instead.
4. The applicant requested access to Meres Boulevard, a Pinellas County roadway. The Pinellas County Public Works Department denied the request. The project's sole access is from Apricot Court, a City roadway.
5. The applicant's proposed parking exceeds the minimum requirements of the Smartcode. Upon request from staff the proposed parking was reduced by five spaces. Staff concerns regarding parking are discussed under "Review Standard – Comprehensive Plan," below.
6. The project proposes to use reclaimed water for irrigation.

REVIEW STANDARD – COMPREHENSIVE PLAN:
This application is being processed under the 2025 Comprehensive Plan as the submittal was received by the City prior to the effective date of the 2045 Comprehensive Plan.

Land Use: The subject property is located in the Community Redevelopment District (CRD) on the Future Land Use Map (now called "Activity Center"). It is located in the South Gateway Character District of the Special Area Plan (SAP). The SAP states, "The South Gateway character district consists of some large acreage redevelopment sites. The intent of the character district development standards is to encourage mixed use development with ground floor retail and residential or offices on upper floors." The proposed use of a medical and general office building is consistent with the SAP and the Comprehensive Plan, and will be the first new building in the South Gateway Character District to implement the form-based standards of the Smartcode.

Wetland Impacts: The upland area is shown as "hardwood conifer mix" on Figure 19, "Vegetative Cover, Wildlife Habitat and Marine Resources" (Coastal Planning & Conservation Element, 2025 Comprehensive Plan). The applicant has submitted a wildlife and habitat survey report that

characterizes the upland as urban land due to past soil disturbance with a predominance of invasive exotic and weedy species. Proposed wetland impacts associated with filling and grading the site for construction have been approved by the Southwest Florida Water Management District (SWFWMD). That permit expires on June 4, 2029. The U.S. Army Corps of Engineers (ACOE) also approved the proposed wetland impacts. The ACOE permit expired on February 27, 2019. The applicant has applied for a new ACOE permit. The applicant has also submitted an application to the Pinellas County Water and Navigation Authority for a dredge and fill permit.

> Policy 1.1.1 of the Coastal Management Goals (2025 Comprehensive Plan) states:
> "Evaluate all wetland areas for potential preservation designation with a goal of 'no net loss of wetlands'. Development projects which may affect wetland areas must meet the following criteria and must also be consistent with Policies 1.6.6 and 1.6.7 of the Conservation Goals Objectives and Policies:
> 1. An overall public benefit is provided by the development, and the mitigation plan provides an overall improvement to water quality within the applicable watershed.
> 2. Proposed mitigation shall be in the following order of priority.
>   a. Mitigation on the same site of the development.
>   b. Mitigation within the Planning Area Boundary
>   c. Mitigation within the applicable watershed as identified by Southwest Florida Water Management District.
> 3. Mitigation plans which rely on 2.c. above shall also be required to perform some mitigation either on site, adjacent to the development, or within the Planning Area that improves water quality and/or wildlife habitat."

Wetland mitigation was performed within the City limits (i.e., "Planning Area Boundary" per 2.b above), at the North Anclote River Nature Park. Construction of the mitigation site was completed over the winter of 2014-2015. The seventh and final mitigation monitoring report was submitted to the SWFWMD in August 2025, documenting achievement of the required mitigation success criteria.

The above-referenced Conservation Goals of the 2025 Comprehensive Plan state:

> "Policy 1.6.6 Preserve / conserve wetlands and areas of significant upland habitat as defined in Future Land Use Policy 1.1.12 in accordance with specific regulations related to wetlands protection, preservation of open space, planned development performance zoning, transfer of density/intensity rights, buffers and setbacks, tree protection, clustering of units within the least environmentally-sensitive areas, and other techniques adopted in the Land Development Code.
>
> Policy 1.6.7 Wetlands that are not designated as 'Preservation' or 'Recreation Open Space' on the Future Land Use Map shall require a future land use amendment to either of these two designations prior to issuance of any construction permits for adjacent upland development."

The project utilizes 100% of the disturbed uplands that are the least environmentally sensitive area of the site. The project impacts 82% of the wetland/submerged land on the site, preserving

approximately 18% of the remaining submerged land. The project's proposed wetland impacts have been successfully mitigated.

Parking: Table 4E(ii) of the Smartcode sets the minimum requirements for parking. The proposed floor area of the project (13,057 square feet) requires 39 spaces. The applicant originally proposed 75 spaces. Although the project is not specifically governed by the current 2045 Comprehensive Plan, the City's intent is to reduce urban heat islands and sources. The Heat Severity Map of the 2045 Comprehensive Plan (included in this agenda packet) shows a concentration of mild to moderate heat severity existing in the Downtown Gateway Character District. Staff seeks to minimize the addition of heat islands in this area as much as possible.

In response to staff's request to reduce the number of parking spaces, the applicant stated that the spaces are needed and allowable based on compliance with the maximum impervious surface ratio (ISR). The applicant revised the project to propose 70 spaces (5-space reduction) and to include the use of pervious pavement for 16 of the spaces. The pervious pavement reduces stormwater impacts but it does not significantly reduce the heat island effect. Additional trees are proposed in lieu of the five spaces removed. Since the site elevation will be increased with approximately four to seven feet of fill, the use of silva cells or similar method for installation of large trees at strategic points in the parking lot are highly recommended and should be feasible to install. The installation of silva cells or structured soil could potentially be done in conjunction with the deposition and compaction of the fill material.

The applicant's project is consistent with the 2025 Comprehensive Plan.

REVIEW STANDARD - ZONING:
The property is located within the T5a South Pinellas Ave transect district. Office is a use allowed by right.

T5a South Pinellas Ave Transect

	Standards (Smartcode and Land Development Code (LDC))		Proposed Project
Dimensional Standards [Table 5B(v)]			
	Max. Building Height = 2 stories	✓	One story
	Max. Lot Coverage = 70% maximum	✓	36% (13,057 square feet)
	Max. Non-Residential Floor Area Ratio = 1.0	✓	0.16 (13,057 square feet)
	Frontage Buildout = 80% minimum	✓	S Pinellas Ave: 90% Meres Blvd: 23% without streetscreen Meres Blvd: 100% with streetscreen (warrant for shrub screen requested)
	Max. Impervious Surface Ratio = 0.90	✓	0.65 (1.19 acres)
	Max. Front Yard Primary = 10 feet	✓	10 feet
	Max. Front Yard Secondary = 15 feet		12 feet
	Min. Side Yard = n/a	✓	88 feet
	Min. Rear Yard = 5 feet	✓	196 feet

(continued)

Standards (Smartcode and Land Development Code (LDC))		Proposed Project
Parking Requirements [Table 4E(ii)]		
3/1,000 s.f. FAR = 39 spaces required	✓	70 spaces
Driveway and Access Management [Section 4.7.2.b]		
Two-way driveways restricted to 24-foot width	✓	One driveway access point; 30-foot width shown; recommended condition requiring reduction to 24-foot width
Landscaping & Screening [Section 4.8.8]		
Five (5) trees required on frontage, 50% of more of frontage requires shrubs and vegetative cover.	✓	10 trees, 100% of frontage with shrubs and grass
Waste Disposal [LDC Section 139.01]		
Dumpster enclosure required	✓	Dumpster enclosure provided

WARRANTS:
The frontage buildout requirement for the T5a transect is 80%. The proposed building meets the minimum frontage buildout requirement on the South Pinellas Ave frontage, but not on the Meres Boulevard frontage. Section 4.5.4 of the Smartcode allows use of a streetscreen of 3.5 to 8 feet in height in lieu of building frontage. It also allows use of a fence or a planted hedge row in lieu of a streetscreen wall by warrant. The applicant is proposing use of the hedge row to achieve a 100% streetscreen along the Meres Blvd frontage. Staff supports the warrant request request. The South Pinellas Ave frontage is the predominant commercial corridor serving this property. The solid streetwall screen design along that frontage is felt to be sufficient to support the long-term goal of a walkable street-oriented environment. The proposed hedge row will provide an attractive way to screen the parking area and rear building facade from the Meres Blvd side.

SITE PLAN REVIEW PROCEDURES & STANDARDS:
The process for Site Plan review is set forth in Sections 210.03 and 210.04 of the Land Development Code (LDC) and calls for the Planning and Zoning Board to review the site plan for compliance with (1) the Comprehensive Plan, (2) the Comprehensive Zoning and Land Development Code, (3) the City's Concurrency Management System, and (4) the City's Building Codes. A written recommendation shall be made to the Board of Commissioners finding the project in compliance with the standards of review, as follows:

1. The application is found to be consistent with the City's Comprehensive Plan and the implementing Special Area Plan,
2. The application is found to be compliant with the City's Land Development Code and the Smartcode,
3. The City has the capacity and the available facilities to serve the project and it therefore meets the City's Concurrency Management standards (see below), and,
4. The project will be required to, and is expected to be able to, meet the standards of the City's Building Code.

FACILITIES IMPACTS AND LEVEL OF SERVICE ANALYSIS:
Article VIII of the Land Development Code requires that public facilities be available concurrent with impacts from development. Facilities impacts are not expected to degrade the levels of services for any of the listed facilities. Facilities impacts are listed in the table below.

Facility	Proposed Impacts
Potable Water	1,960 gallons per day
Wastewater*	1,568 gallons per day
Solid Waste	3 tons per year
Transportation**	472 daily trips; 51 peak hour trips*

**See Transportation Management Plan discussion below.*

TRANSPORTATION MANAGEMENT PLAN:
The applicant has calculated the total highest peak hour trips for this use at 51. This is the absolute minimum trip generation that would trigger the requirement of a Transportation Management Plan pursuant to Section 122.11.03 of the Land Development Code. However, staff feels that the trips are mitigated by two factors: There is a transit stop located on the same side of N. Pinellas Avenue approximately 280 feet north of the site, and, the applicant is proposing bicycle racks on site. Staff recommends that these two existing factors mitigate the additional peak hour trips for this use. Reduction of parking spaces on the site may also help to motivate a reduction in automobile trips.

TECHNICAL REVIEW COMMITTEE:
The Technical Review Committee (TRC) reviewed this project five times with the last review occurring on May 1, 2025. TRC reports for all reviews are included with the agenda packet. The TRC deemed the project complete and ready for further processing. Advisory TRC comments are included in the recommended conditions of approval for Resolution 2025-65.

ATTACHMENTS:
1. Staff Presentation
2. Draft Resolution #2025-65
3. Survey/Site Plan/Landscape Plan
4. Building Elevations
5. Drainage Narrative
6. Geotechnical Report
7. Wildlife Survey
8. Tree Inventory
9. Pinellas County Letter of Denial for Access to Meres Boulevard
10. SWFWMD Permit, Receipts for Jurisdictional Permit Applications
11. Wetland Mitigation Construction Plan
12. Wetland Mitigation Monitoring Report No. 7
13. TRC Comment Reports

SHOPPES AT MERES
SITE PLAN APPROVAL
#23-154

Planning & Zoning Board Meeting – November 17, 2025

Board of Commissioners Meeting – December 9, 2025

REQUEST

#23-154 – Site Plan Approval – Shoppes at Meres – 1098 South Pinellas Avenue

Resolution #2025-65

- Property Size = +/- 1.83 acres (79,715 square feet)
  - 0.63 acres of uplands
  - 1.20 acres of wetlands
- Current Land Use: Activity Center
- Current Zoning: T5a South Pinellas Ave Transect District of the Special Area Plan
- Proposed Development: Medical and General Office Building, 13,057 square feet of gross floor area
- **Applicant/Owner**: Juniper Development, LLC – Abir Kahled
- **Agents**: Sycamore Engineering, Inc. – J.D. Alsabbagh
- **Site History**: 2 previous approvals (2010 and 2020). Project never constructed.

CITY OF TARPON SPRINGS
PLANNING & ZONING DEPARTMENT

LOCATION & CONTEXT



CITY OF TARPON SPRINGS
PLANNING & ZONING DEPARTMENT

LOCATION & CONTEXT



CITY OF TARPON SPRINGS
PLANNING & ZONING DEPARTMENT

LOCATION & CONTEXT

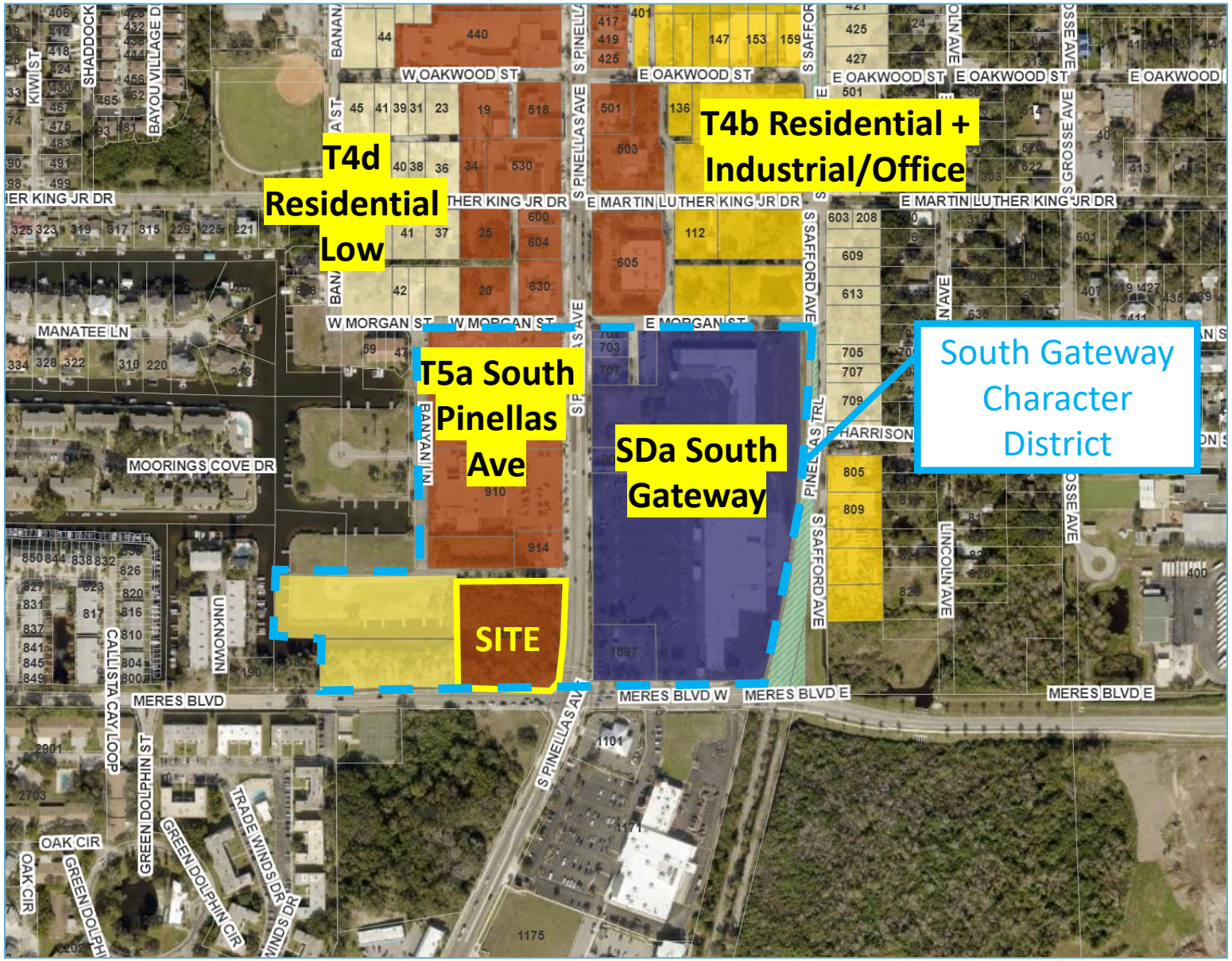

CITY OF TARPON SPRINGS
PLANNING & ZONING DEPARTMENT

SURVEY

CITY OF TARPON SPRINGS
PLANNING & ZONING DEPARTMENT



WETLAND LINE TABLE

LINE	BEARING	DISTANCE
L2	N 01°09'57" W	13.19'
L3	N 07°25'06" E	37.63'
L4	N 83°30'48" E	26.61'
L5	S 84°09'10" E	30.53'
L6	N 87°30'44" E	32.55'
L7	S 85°13'37" E	27.29'
L8	N 88°57'44" E	28.32'
L9	S 86°48'49" E	22.92'
L10	S 74°39'12" E	31.32'
L11	N 87°15'24" E	25.84'
L12	N 22°47'57" E	25.86'
L13	N 07°02'26" W	18.78'
L14	N 26°17'58" E	27.39'
L15	N 25°34'11" W	31.73'
L16	N 17°02'36" W	22.88'
L17	N 22°10'33" E	15.78'
L18	N 21°09'10" E	18.66'
L19	N 41°02'20" W	14.73'
L20	N 77°57'51" W	24.22'
L21	N 35°27'57" W	27.01'
L22	N 27°53'15" W	20.94'
L23	N 82°49'03" W	10.22'
L24	S 67°59'36" W	19.03'
L25	N 52°41'29" W	17.18'
L26	N 79°16'52" W	14.03'
L27	N 81°39'33" W	27.21'
L28	S 72°52'43" W	11.70'
L29	N 34°58'23" W	19.69'
L30	S 39°42'22" W	22.88'
L31	N 56°37'17" W	18.27'
L32	N 33°54'05" W	20.40'
L33	N 87°39'14" W	26.11'
L34	S 84°53'12" W	23.76'

LINE	BEARING	DISTANCE
L1	S 49°58'39" W	23.22'

CURVE	RADIUS	ARC LENGTH	CHORD LENGTH	CHORD BEARING	DELTA ANGLE
C1	936.02'	35.87'	35.87'	S 09°12'28" W	02°11'45"
C2	936.02'	126.79'	126.69'	S 04°14'18" W	07°45'39"

LEGAL DESCRIPTION:

LOTS 1,2,3,4,5,6,7,8,9,10 AND 11, BLOCK 7, TARPON SPRINGS ENTERPRISES INCORPORATED REPLAT, ACCORDING TO THE MAP OR PLAT THEREOF AS RECORDED IN PLAT BOOK 9, PAGE 10, PUBLIC RECORDS OF PINELLAS COUNTY, FLORIDA AND THE VACATED UNNAMED STREET ADJACENT TO LOTS 1,2,10 AND 11 THEREOF.

LESS AND EXCEPT ROAD RIGHT OF WAY AND THAT CERTAIN PROPERTY DESCRIBED IN THE PETITION DATED AUGUST 5, 2002, FILED ON AUGUST 6, 2002 BY THE STATE OF FLORIDA DEPARTMENT OF TRANSPORTATION AS PETITIONER VS MARY G. ARFARAS ET AL, AS DEFENDANTS, FILED IN THE SIXTH JUDICIAL CIRCUIT COURT OF FLORIDA, IN AND FOR THE COUNTY OF PINELLAS AS CASE NO. 02-6224-CT, DIVISION NO. 21, FILED IN O.R. BOOK 12152, PAGE 950, PUBLIC RECORDS OF PINELLAS COUNTY, FLORIDA AND IN THE ORDER OF TAKING DATED SEPTEMBER 18, 2002, FILED SEPTEMBER 28, 2002, BY THE STATE OF FLORIDA DEPARTMENT OF TRANSPORTATION AS PETITIONER VS HELEN C. ARFARAS ET AL, AS DEFENDANTS IN THE SIXTH JUDICIAL CIRCUIT COURT OF FLORIDA, IN AND FOR THE COUNTY OF PINELLAS AS CASE NO. 02-6224-CI, DIVISION NO. 21, FILED IN O.R. BOOK 12228, PAGE 1665, PUBLIC RECORDS OF PINELLAS COUNTY, FLORIDA.

NOTES:

1. NO EXCAVATION WAS PERFORMED TO VERIFY THE LOCATION OR EXISTENCE OF ANY UNDERGROUND IMPROVEMENTS. NO BUILDING OVERHANGS SHOWN THIS DATE.
2. THIS SURVEY WAS PERFORMED WITHOUT THE BENEFIT OF A TITLE REPORT. NO INSTRUMENTS OF RECORD REFLECTING EASEMENTS, RIGHTS-OF-WAY, AND/OR OWNERSHIP WERE FURNISHED TO OR PURSUED BY THE UNDERSIGNED OTHER THAN THOSE SHOWN HEREON.
3. NOT VALID UNLESS EMBOSSED WITH THE SURVEYOR'S SEAL.
4. ELEVATIONS (IF SHOWN) ARE BASED ON ASSUMED VERTICAL DATUM UNLESS OTHERWISE NOTED.
5. RE-USE OF THIS SURVEY FOR PURPOSES OTHER THAN WHICH IT WAS INTENDED, WITHOUT WRITTEN VERIFICATION, WILL BE AT THE RE-USERS SOLE RISK AND WITHOUT LIABILITY TO THE SURVEYOR, NOTHING HEREIN SHALL BE CONSTRUED TO GIVE ANY RIGHTS OR BENEFITS TO ANYONE OTHER THAN THOSE CERTIFIED TO.
6. BEARINGS ARE BASED ON THE SOUTH LINE OF SUBJECT PARCEL ASSUMED TO BE N 89°18'56" W.
7. SUBJECT PARCEL APPEARS TO LIE IN FLOOD ZONE AE, PER THE FLOOD INSURANCE RATE MAP COMMUNITY PANEL NO. 12103C 0019 H, DATED 8/24/2021, BASE FLOOD = 9'
8. SOME PORTIONS OF THIS DRAWING, ESPECIALLY FENCES AND OBJECTS NEAR PROPERTY AND BUILDING LINES MAY HAVE BEEN EXAGGERATED FOR GRAPHICAL PURPOSES AND MAY NOT BE TO SCALE. MEASUREMENTS AND DIMENSIONS SHOWN HOLD OVER SCALE. SYMBOLS MAY NOT BE TO SCALE. ANY USE OF AN ELECTRONIC COPY OF THIS SURVEY IS AT RE-USERS SOLE RISK AND WITHOUT LIABILITY TO THE SURVEYOR.

TYPICAL LEGEND

CB	= COVERED BRICK	P/E	= POOL EQUIPMENT
CC	= COVERED CONCRETE	W/E	= WELL EQUIPMENT
CT	= COVERED TILE	WM	= WATER METER
WP	= WELL PIPE	℄	= CENTERLINE
CA	= COVERED AREA	(D)	= DEED/DESCRIPTION
MH	= MANHOLE	(P)	= PLAT
CS	= CONCRETE SLAB	(F)	= FIELD DIMENSION
UP	= UTILITY POLE	FCM	= FOUND CONC MONUMENT
UB	= UTILITY BOX	FIP	= FOUND IRON PIPE
LP	= LIGHT POLE	FIR	= FOUND IRON ROD
MP	= METER POLE	FN	= FOUND NAIL
PB	= PHONE BOX	FN&D	= FOUND NAIL & DISK
TV	= CABLE TELEVISION BOX	FH	= FIRE HYDRANT
EB	= ELECTRIC BOX	GW	= GUY WIRE
ET	= ELECTRIC TRANSFORMER	LB	= LICENSED BUSINESS
ELEV.	= ELEVATION	T.O.B.	= EXISTING ELEVATION
		H/U	= HEATING AND/OR COOLING UNIT
		OHW	= OVERHEAD LINES
		PLS	= PROFESSIONAL LAND SURVEYOR
		SIR	= SET 1/2" IRON ROD & CAP PSM 6001
		PSM	= PROFESSIONAL SURVEYOR AND MAPPER
		DE	= DRAINAGE EASEMENT
		UE	= UTILITY EASEMENT
		EUE	= ELECTRIC UTILITY EASEMENT
		EPUE	= ELECTRIC POWER UTILITY EASEMENT
		PUE	= PUBLIC UTILITY EASEMENT
		EPE	= ELECTRIC POWER EASEMENT
		CMP	= CORRUGATED METAL PIPE
		RCP	= REINFORCED CONCRETE PIPE
		PVC	= POLYVINYL CHLORIDE
		W/C	= WITNESS CORNER
		NCF	= NO CORNER FOUND OR SET
		S/E	= SCREENED ENCLOSED

CERTIFIED TO: SYCAMORE ENGINEERING;
JUNIPER DEVELOPEMENT, LLC

DRAWN: DG
CHECKED: DR
B.C.: GF

ACCU-SURV SURVEYING AND MAPPING, LLC

4440 SPRING LAKE HIGHWAY
BROOKSVILLE, FLORIDA 34601
Phone: (813) 949-6506
Fax: (813) 856-4541
ACCUSURV@GMAIL.COM

TREE, TOPO AND BOUNDARY SURVEY

PSM6001
darren gibson APRIL 17, 2024
DARREN KIRK GIBSON P.S.M. #6001

NO.	DATE	REVISIONS	APP'D BY

JOB NO. 2404-007WL
FILE NAME: 2404-007WL
DATE OF FIELD WORK: N/A
SCALE: 1"=20'
SHT. 1

DEMOLITION AND FILL PLAN

0.98 OF 1.20 TOTAL ACRES OF WETLANDS TO BE IMPACTED (82%)



CITY OF TARPON SPRINGS
PLANNING & ZONING DEPARTMENT

SITE PLAN

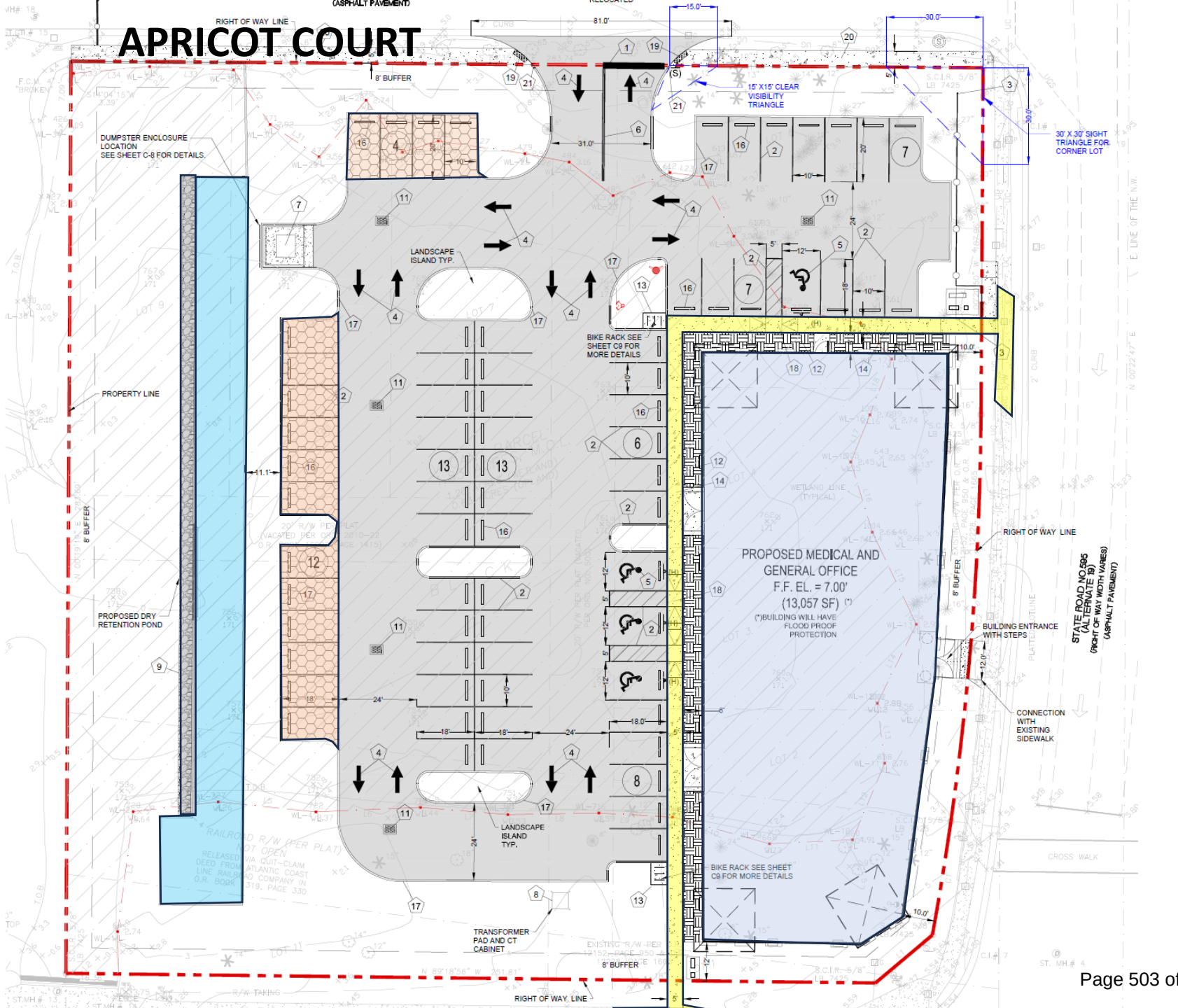

CITY OF TARPON SPRINGS
PLANNING & ZONING DEPARTMENT

LANDSCAPE PLAN

REQUESTED WARRANT:
SUBSTITUTE HEDGE ROW FOR STREETSCREEN ALONG SOUTH FRONTAGE



CITY OF TARPON SPRINGS
PLANNING & ZONING DEPARTMENT

BUILDING ELEVATION, SOUTH PINELLAS AVENUE

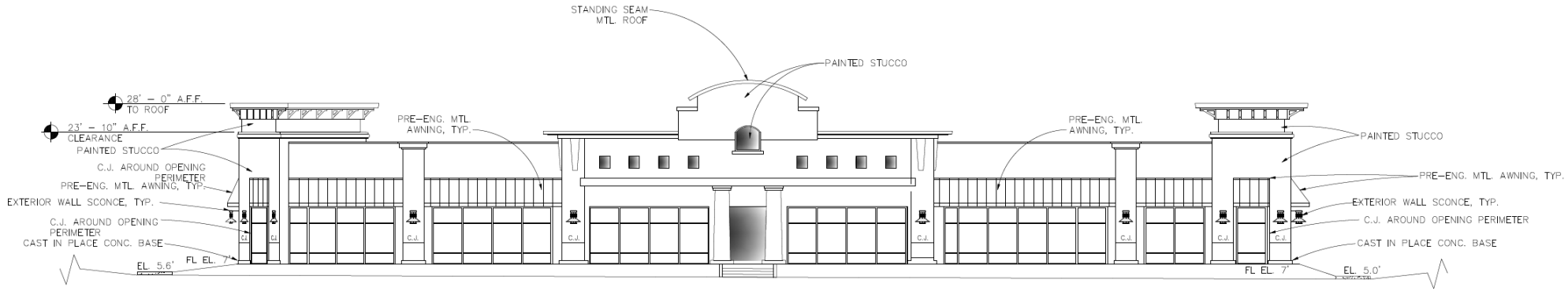

EAST ELEVATION
1/8" = 1"

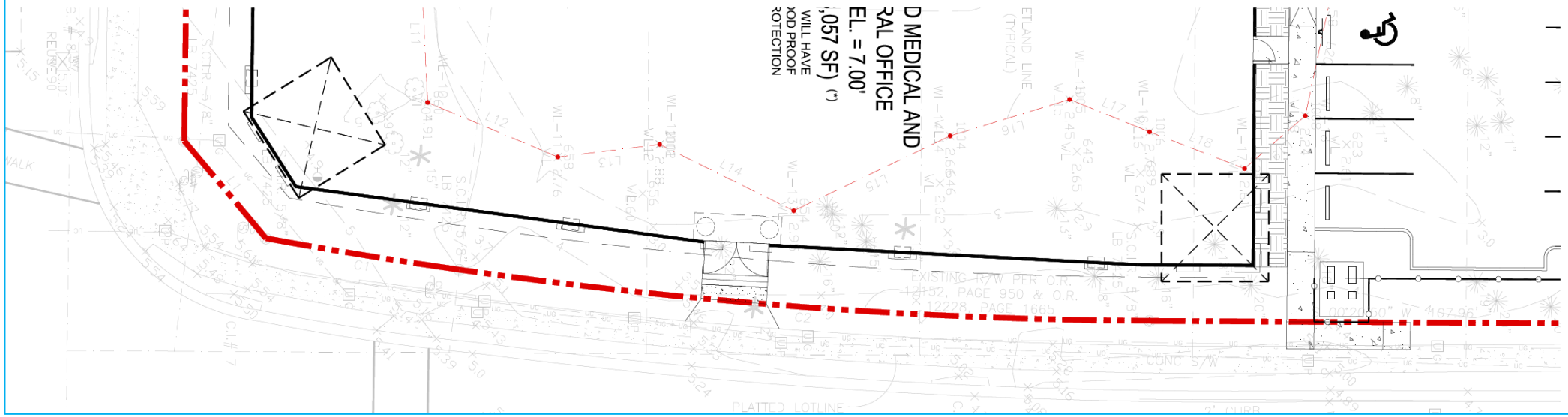

CITY OF TARPON SPRINGS
PLANNING & ZONING DEPARTMENT

WETLAND MITIGATION CONSTRUCTION PLAN
INSTALLED 2015 AT NORTH ANCLOTE RIVER NATURE PARK

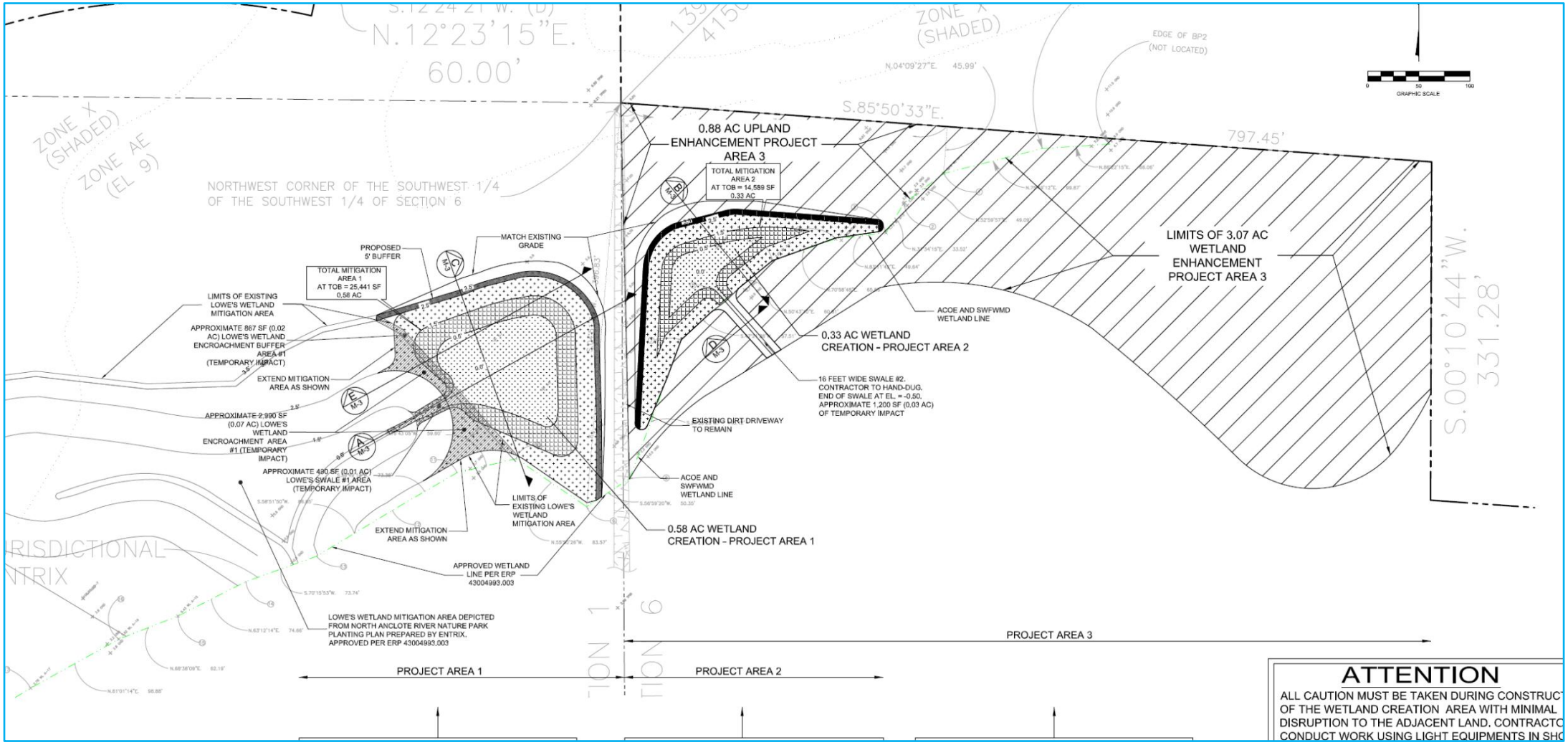

CITY OF TARPON SPRINGS
PLANNING & ZONING DEPARTMENT









WETLAND MITIGATION, NOVEMBER 2025

CITY OF TARPON SPRINGS
PLANNING & ZONING DEPARTMENT

REVIEW CRITERIA – SITE PLAN

1) **The Comprehensive Plan.** The project is being processed under the 2025 Comprehensive Plan. The property is located in the Special Area Plan (now Activity Center) and is compliant with that plan. The following are noted:
    1) Requested wetland impacts were successfully mitigated within the City limits at the North Anclote River Nature Park in accordance with the 2025 Comprehensive Plan policies.
    2) Although not strictly a requirement of the plan, staff is concerned with the heat severity effect of the proposed amount of parking. The applicant has reduced the original proposed 75 spaces to 70 spaces.

2) **The Land Development Code (LDC)/Smartcode.** The project is in compliance:

The applicant has proposed 70 parking spaces (31 more than the 39 spaces required). Landscaping includes additional trees to reduce heat severity effects in this area.

The applicant has requested a **warrant** to allow a hedge row to fulfill the requirement of a streetscreen along the Meres Boulevard frontage.

With 51 peak hour vehicular trips proposed, the applicant would be required to provide a Transportation Management Plan (TMP). However, existing mitigating factors (transit stop and bike rack) provide sufficient non-vehicular access and obviate the need for the TMP.

HEAT SEVERITY MAP

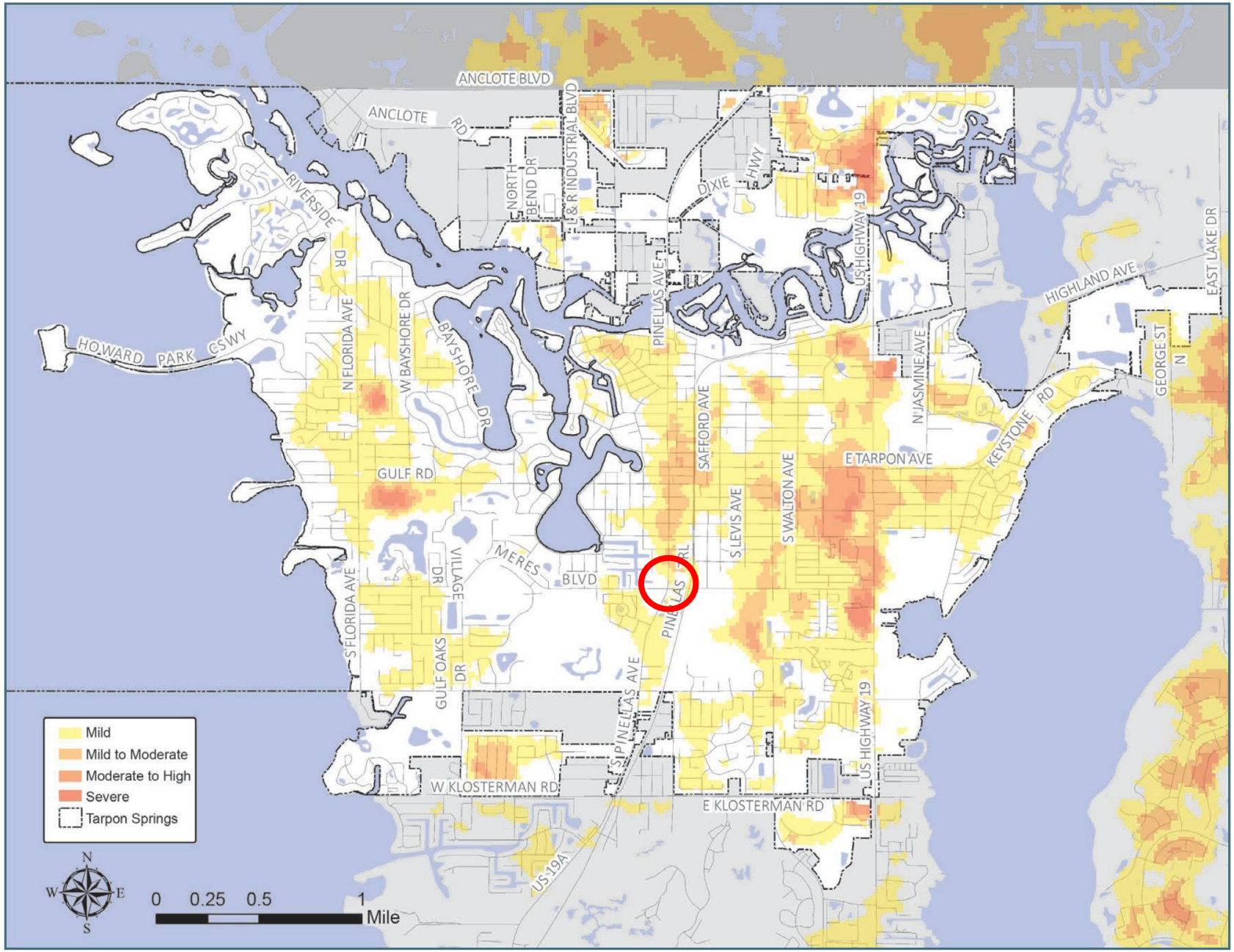

CITY OF TARPON SPRINGS
PLANNING & ZONING DEPARTMENT

REVIEW CRITERIA – SITE PLAN

3) **The City's Concurrency Management System.** The project can be served with no adverse impacts to City facilities.

4) **The City's Building Codes.** The project will be required to, and is expected to be able to, meet the standards of the City's Building Codes. The applicant wishes to implement multi-tenant floodproofing. Although this is not preferred by City staff, it is allowable. A condition is recommended to ensure that the required planning and agreement documentation is provided with the application for a building permit.

Technical Review Committee (TRC) completed five rounds of review on May 1, 2025. All comments of the TRC have been resolved or are addressed as recommended conditions of approval.

PRELIMINARY STAFF RECOMMENDATION

Resolution #2025-65: Staff recommends ***approval*** of the proposed site plan, subject to the following warrants and conditions:

Warrants

1. To allow use of a planted hedge row as a streetscreen along the Meres Boulevard frontage.

Conditions

1. Simultaneous Site Construction and Building (vertical) Construction permit issuance.
2. Dry floodproofing requirements ands documentation to be addressed with submittal of a building permit application.
3. Provide all other jurisdictional permits with the Site Construction permit application including U.S. Army Corps of Engineers and Pinellas County Water and Navigation Authority.

PRELIMINARY STAFF RECOMMENDATION

Resolution #2025-65: Recommended conditions (continued):

4. Landscape plant material bordering roadways to meet state and county vertical clearance requirements, and, invasive exotics to be removed.
5. Driveway access point to be reduced to 24 feet in width.
6. Project to be master metered and follow all utilities requirements and construction protocol.

PLANNING AND ZONING BOARD RECOMMENDATION

Resolution #2025-65: The Planning and Zoning Board reviewed this application at their regular meeting of November 17, 2025 with a full board present. The Board voted to recommend approval of the project with two members dissenting. The Board's motion included the following recommendations:

- Omit staff-recommended condition #3.
- Revise condition #1 to allow for separate (*not* simultaneous) application and issuance of the Site Construction and the Building (vertical) Construction permits, and, for the City to provide adequate time to obtain agency permits and a driveway width variance.
- Modify condition #4 to allow for the variance request.

One member of the public spoke in opposition to the project.

PLANNING AND ZONING BOARD RECOMMENDATION

Resolution #2025-65: Expected timeline if project phasing and time extension are granted:

- 12/9/2025: Approval of Site Plan
- 6/9/2026:
  - Site Construction Permit Has Been Issued
  - Driveway variance has been processed and plan modified
  - Applicant has obtained outside agency approvals or shows significant progress towards same
- 7/9/2026: Building (vertical) permit application received
- 1/9/2027: Building permit obtained

CITY OF TARPON SPRINGS
PLANNING & ZONING DEPARTMENT

RESOLUTION NO. 2025-65

A RESOLUTION OF THE BOARD OF COMMISSIONERS OF THE CITY OF TARPON SPRINGS, FLORIDA, APPROVING APPLICATION #23-154 REQUESTING SITE PLAN APPROVAL FOR CONSTRUCTION OF A MEDICAL AND GENERAL OFFICE BUILDING OF APPROXIMATELY 13,057 SQUARE FEET IN GROSS FLOOR AREA INCLUDING PARKING AND OTHER SITE IMPROVEMENTS ON 1.83 ACRES (MORE OR LESS) OF PROPERTY LOCATED AT 1098 SOUTH PINELLAS AVENUE, ON THE NORTHWEST CORNER OF MERES BOULEVARD AND SOUTH PINELLAS AVENUE, IN THE T5A (SOUTH PINELLAS AVE) TRANSECT DISTRICT; PROVIDING FOR FINDINGS; PROVIDING FOR CONDITIONS; AND PROVIDING FOR AN EFFECTIVE DATE.

WHEREAS, the City of Tarpon Springs has received an application for Site Plan approval to allow for a medical and general office building located at 1098 South Pinellas Avenue on the northwest corner of South Pinellas Avenue and Meres Boulevard in the T5a South Pinellas Ave Transect District of the Special Area Plan; and,

WHEREAS, the T5a South Pinellas Ave Transect District allows office buildings as a use by right; and,

WHEREAS, the Planning and Zoning Board held a public hearing on this application at its meeting of November 17, 2025; and,

WHEREAS, pursuant to Section 210.03(C) of the Comprehensive Zoning and Land Development Code, the Board of Commissioners must approve, deny or approve subject to conditions, each application for site plan approval; and,

WHEREAS, written legal notice of this action has been provided in accordance with Article XII of the Comprehensive Zoning and Land Development Code.

NOW, THEREFORE, BE IT RESOLVED BY THE BOARD OF COMMISSIONERS OF THE CITY OF TARPON SPRINGS, FLORIDA, THAT:

SECTION 1: SITE PLAN FINDINGS

Application Number 23-154 meets the criteria for approving a Site Plan as set forth in Section 210.04 of the Land Development Code.

SECTION 2: SITE PLAN APPROVAL

Site Plan application Number 23-154 for property located at 1098 South Pinellas Avenue on the northwest corner of South Pinellas Avenue and Meres Boulevard and further described in Exhibit A, prepared and sealed by Jihad D. Alsabbagh, P.E. and attached as Exhibit B, is hereby approved with the following warrants and conditions:

Warrants

1. To allow use of a planted hedge row as a streetscreen along the Meres Boulevard frontage.

Conditions

1. ~~Site construction and vertical building permits must be applied for simultaneously. The intent of this condition is to prevent premature fill deposition and seawall construction.~~ The Site Plan approval shall expire at six months from the effective date unless:
   a. a Site Construction Permit ~~and a Building Permit are both~~ is obtained and kept active,
   b. the applicant demonstrates diligence and progress to the satisfaction of the City in obtaining outside agency approvals for the site construction, and,
   ~~1.~~c. the applicant applies for a building (vertical) construction permit within one month of completing site construction and obtains that permit within the ensuing six months.
2. Dry floodproofing requirements shall be addressed with submittal of a building permit application. The submittal shall include plans and documents covering flood-proofing and muti-tenant flood-proofing management to the satisfaction of the Floodplain Administrator and the Building Official, including recording of all attendant covenants on the property needed to ensure that these requirements are met.
3. ~~All plant material installed along the rights-of-way of South Pinellas Ave and Meres Blvd shall meet state and county requirements for vertical clearance at planting. All Brazilian pepper (*Schinus terebinthifolius*) and Australian pine trees (*Casuarina* spp.) must be eradicated from the site and the site kept free of these species in perpetuity.~~
4. ~~3.~~ The driveway access point shall be reduced from 30 feet in width to 24 feet in width or a variance for the desired width shall be obtained in time for issuance of the Site Construction Permit.
5. ~~4.~~ This parcel shall be master metered and shall use an above ground reduced pressure meter assembly. The contractor shall field verify utilities and the contractor shall complete and install both potable water and sanitary sewer taps. The City requires 48 hours notice prior to any work completed on the mains. Any adjustments to the utilities due to the project are the contractor's responsibility. All restoration is the contractor's responsibility.

SECTION 3: EFFECTIVE DATE

This Resolution shall be effective upon adoption in the manner provided by law.

LEGAL DESCRIPTION:

LOTS 1,2,3,4,5,6,7,8,9,10 AND 11, BLOCK 7, TARPON SPRINGS ENTERPRISES INCORPORATED REPLAT, ACCORDING TO THE MAP OR PLAT THEREOF AS RECORDED IN PLAT BOOK 9, PAGE 10, PUBLIC RECORDS OF PINELLAS COUNTY, FLORIDA AND THE VACATED UNNAMED STREET ADJACENT TO LOTS 1,2,10 AND 11 THEREOF.

LESS AND EXCEPT ROAD RIGHT OF WAY AND THAT CERTAIN PROPERTY DESCRIBED IN THE PETITION DATED AUGUST 5, 2002, FILED ON AUGUST 6, 2002 BY THE STATE OF FLORIDA DEPARTMENT OF TRANSPORTATION AS PETITIONER VS MARY G. ARFARAS ET AL, AS DEFENDANTS, FILED IN THE SIXTH JUDICIAL CIRCUIT COURT OF FLORIDA, IN AND FOR THE COUNTY OF PINELLAS AS CASE NO. 02-6224-CT, DIVISION NO. 21, FILED IN O.R. BOOK 12152, PAGE 950, PUBLIC RECORDS OF PINELLAS COUNTY, FLORIDA AND IN THE ORDER OF TAKING DATED SEPTEMBER 18, 2002, FILED SEPTEMBER 28. 2002, BY THE STATE OF FLORIDA DEPARTMENT OF TRANSPORTATION AS PETITIONER VS HELEN C. ARFARAS ET AL, AS DEFENDANTS IN THE SIXTH JUDICIAL CIRCUIT COURT OF FLORIDA, IN AND FOR THE COUNTY OF PINELLAS AS CASE NO. 02-6224-CI, DIVISION NO. 21, FILED IN O.R. BOOK 12228, PAGE 1665, PUBLIC RECORDS OF PINELLAS COUNTY, FLORIDA.

THE DESIGN AND IDEAS INCORPORATED HEREIN, AS AN INSTRUMENT OF PROFESSIONAL SERVICE IS PROPERTY OF SYCAMORE ENGINEERING, INC. DIMENSIONS SHOULD NOT BE OBTAINED BY USING SCALING OF THE PLAN. DIMENSIONS CAN BE OBTAINED BY CONTACTING SYCAMORE ENGINEERING, INC. IT CAN NOT BE USED OR COPIED FOR ANY OTHER PROJECT WITHOUT WRITTEN AUTHORIZATION FROM SYCAMORE ENGINEERING, INC. DIRECTLY. © 2024

Resolution 2025-65 Exhibit B, 19 pages

THE SHOPPES AT MERES
1098 SOUTH PINELLAS AVENUE
TARPON SPRINGS, FLORIDA 33689
PRELIMINARY DEVELOPMENT PLAN

SECTION 13, TOWNSHIP 27 S, RANGE 15 E

MASTER PERMIT TRACKING SCHEDULE		
PERMIT #	PERMITTING ENTITY	CONTACT INFORMATION
App#893272	SOUTHWEST FLORIDA WATER MANAGEMENT DISTRICT	CONTACT NAME: DAVE KRAMER PHONE: (813) 985-7481
TBD	CITY OF TARPON SPRINGS	CONTACT NAME: JOHN BERTRAND PHONE: **(727) 942-5604**



LOCATION MAP
N.T.S.



VICINITY MAP
N.T.S.

LEGAL DESCRIPTION

LEGAL DESCRIPTION:

LOTS 1,2,3,4,5,6,7,8,9,10 AND 11, BLOCK 7, TARPON SPRINGS ENTERPRISES INCORPORATED REPLAT, ACCORDING TO THE MAP OR PLAT THEREOF AS RECORDED IN PLAT BOOK 9, PAGE 10, PUBLIC RECORDS OF PINELLAS COUNTY, FLORIDA AND THE VACATED UNNAMED STREET ADJACENT TO LOTS 1,2,10 AND 11 THEREOF.

LESS AND EXCEPT ROAD RIGHT OF WAY AND THAT CERTAIN PROPERTY DESCRIBED IN THE PETITION DATED AUGUST 5, 2002, FILED ON AUGUST 6, 2002 BY THE STATE OF FLORIDA DEPARTMENT OF TRANSPORTATION AS PETITIONER VS MARY G. ARFARAS ET AL, AS DEFENDANTS, FILED IN THE SIXTH JUDICIAL CIRCUIT COURT OF FLORIDA, IN AND FOR THE COUNTY OF PINELLAS AS CASE NO. 02-6224-CT, DIVISION NO. 21, FILED IN O.R. BOOK 12152, PAGE 950, PUBLIC RECORDS OF PINELLAS COUNTY, FLORIDA AND IN THE ORDER OF TAKING DATED SEPTEMBER 18, 2002, FILED SEPTEMBER 28, 2002, BY THE STATE OF FLORIDA DEPARTMENT OF TRANSPORTATION AS PETITIONER VS HELEN C. ARFARAS ET AL, AS DEFENDANTS IN THE SIXTH JUDICIAL CIRCUIT COURT OF FLORIDA, IN AND FOR THE COUNTY OF PINELLAS AS CASE NO. 02-6224-CI, DIVISION NO. 21, FILED IN O.R. BOOK 12228, PAGE 1665, PUBLIC RECORDS OF PINELLAS COUNTY, FLORIDA.

DATUM

ELEVATIONS DEPICTED HEREON BASED UPON N.G.V.D. 1929 DATUM. THE CONVERSION TO N.A.V.D. 1988 IS N.G.V.D. 1929 - 0.85'.

PROFESSIONAL TEAM

OWNER / DEVELOPER
JUNIPER DEVELOPMENT, LLC C/O
8370 W. HILLSBOROUGH AVENUE, STE 205
TAMPA, FLORIDA 33615
PH.: 813-889-0700
ATTN.: ABIR KAHLED

CIVIL ENGINEER
SYCAMORE ENGINEERING, INC.
8370 W. HILLSBOROUGH AVENUE, STE 205
TAMPA, FLORIDA 33615
PH.: (813) 889-0700
FAX: (813) 889-0788
ATTN.: J.D. ALSABBAGH, P.E.
E-MAIL: jalsabbagh@sycamoreeng.com

PERMITTING AGENCIES

CITY OF TARPON SPRINGS DEVELOPMENT SERVICES
TARPON SPRINGS CITY HALL
324 E. PINE STREET
TARPON SPRINGS, FLORIDA 34689
ATTN: JOHN BERTRAND, CITY PLANNER
PH.:(727) 942-5604

SURFACE WATER DISTRICT
SOUTHWEST FLORIDA WATER
MANAGEMENT DISTRICT-TAMPA OFFICE
7601 HIGHWAY 301 NORTH
TAMPA, FLORIDA 33637-6759
ATTN.: DAVID CRAMER, P.E.

FLORIDA DEPARTMENT OF TRANSPORTATION
DISTRICT 7 - PINELLAS
MAINTENANCE OFFICE
5211 ULMERTON ROAD
CLEARWATER, FLORIDA 33760
PH.: (727) 570-5101
ATTN.: CHRIS GREGORY

PINELLAS COUNTY
BUILDING AND DEVELOPMENT REVIEW SERVICES
PUBLIC WORKS
440 COURT STREET
CLEARWATER, FLORIDA 33756
PH.: (727) 464-3888

OTHER UTILITY COMPANIES

FDEP SANITARY SEWER
FLORIDA DEPARTMENT OF
ENVIRONMENTAL PROTECTION
SOUTHWEST DISTRICT
DRINKING WATER DEPARTMENT
13051 TELECOM PARKWAY
TEMPLE TERRACE, FLORIDA 33637
ATTN.: RAFAH ALKHATIB

FDEP WATER
FLORIDA DEPARTMENT OF
ENVIRONMENTAL PROTECTION
SOUTHWEST DISTRICT
DRINKING WATER DEPARTMENT
13051 TELECOM PARKWAY
TEMPLE TERRACE, FLORIDA 33637
ATTN.: RAFAH ALKHATIB

GAS SERVICE
CLEARWATER GAS
400 N MYRTLE AVENUE
CLEARWATER, FL 33755
PH.: (727) 562-4900 X7423
FAX: (727) 562-4904
ATTN.: BRUCE GRIFFIN

TELEPHONE SERVICE
VERIZON
1280 CLEVELAND STREET, FLCW5033
CLEARWATER, FL 33755
PH.: (727) 562-1134
FAX: (727) 562-9614
ATTN: RICK EPPERHART

ELECTRIC SERVICE
PROGRESS ENERGY
101 CEMETERY ROAD
TARPON SPRINGS, FLORIDA 34689
PH.: (727) 939-4322
FAX: (727) 939-4326
ATTN.: EUGENE E. HANKENHOF

WATER & SANITARY SEWER
CITY OF TARPON SPRINGS
UTILITY DEPARTMENT
201 E. PINE STREET
TARPN SPRINGS, FLORIDA 34689
ATTN.: RAY PAGE
PH.: (727) 942-5616
FAX: (727) 942-5624
E-MAIL: RPAGE@CI.TARPON-SPRINGS.FL.US

INDEX OF SHEETS

C-1 COVER SHEET
C-2 BOUNDARY, TOPOGRAPHIC & TREE SURVEY
C-3 GENERAL NOTES
C-4 DEMOLITION PLAN
C-5 SITE DIMENSION PLAN
C-6 PAVING, GRADING AND DRAINAGE PLAN
C-6A EROSION CONTROL PLAN
C-6B EROSION CONTROL PLAN NOTES
C-7 COMPOSITE UTILITIES PLAN
C-8 GENERAL DETAILS SHEET
C-9 GENERAL DETAILS SHEET
C-10 UTILITIES DETAILS SHEET
C-10A UTILITIES DETAILS SHEET
C-11 REFUSE ENCLOSURE DETAILS SHEET
C-12 HANDICAPPED ACCESSIBILITY GENERAL DETAILS
L-1 TREE REMOVAL PLAN
L-2 LANDSCAPE DETAILS

Scale: N/A

CONTRACTOR SHALL CONTACT SUNSHINE STATE ONE-CALL OF FLORIDA, INC. FOR LOCATION OF ALL UTILITIES TWO COMPLETE BUSINESS DAYS PRIOR TO BEGINNING CONSTRUCTION.
Know what's below. Call before you dig.

No.	Date	Revision - Description
1		
2		
3		
4		
5		
6		
7		

SYCAMORE ENGINEERING, INC.
8370 W. Hillsborough Ave., Suite 205
Tampa, FL 33615
Phone: 813.889.0700
Fax: 813.889.0788
email: greatlocation@sycamoreeng.com
• Civil Engineering
• Transportation Planning
• Land Planning
• Construction Management
• Landscape Architecture
FL. C.A. # 9485 & LB. # 7961

Project Title: THE SHOPPES AT MERES
Project Location: 1098 SOUTH PINELLAS AVENUE TARPON SPRINGS, FL 33689
Sheet Title: COVER SHEET

Digitally signed by Jihad D Sabbagh
Date: 2025.05.07 13:29:34 -04'00'

J.D. ALSABBAGH, P.E.
FL P.E. #58995

Job No.	J0308
Drawn by:	FHG
Approved by:	JDA
Date:	04-16-2024

Sheet No.
C-1

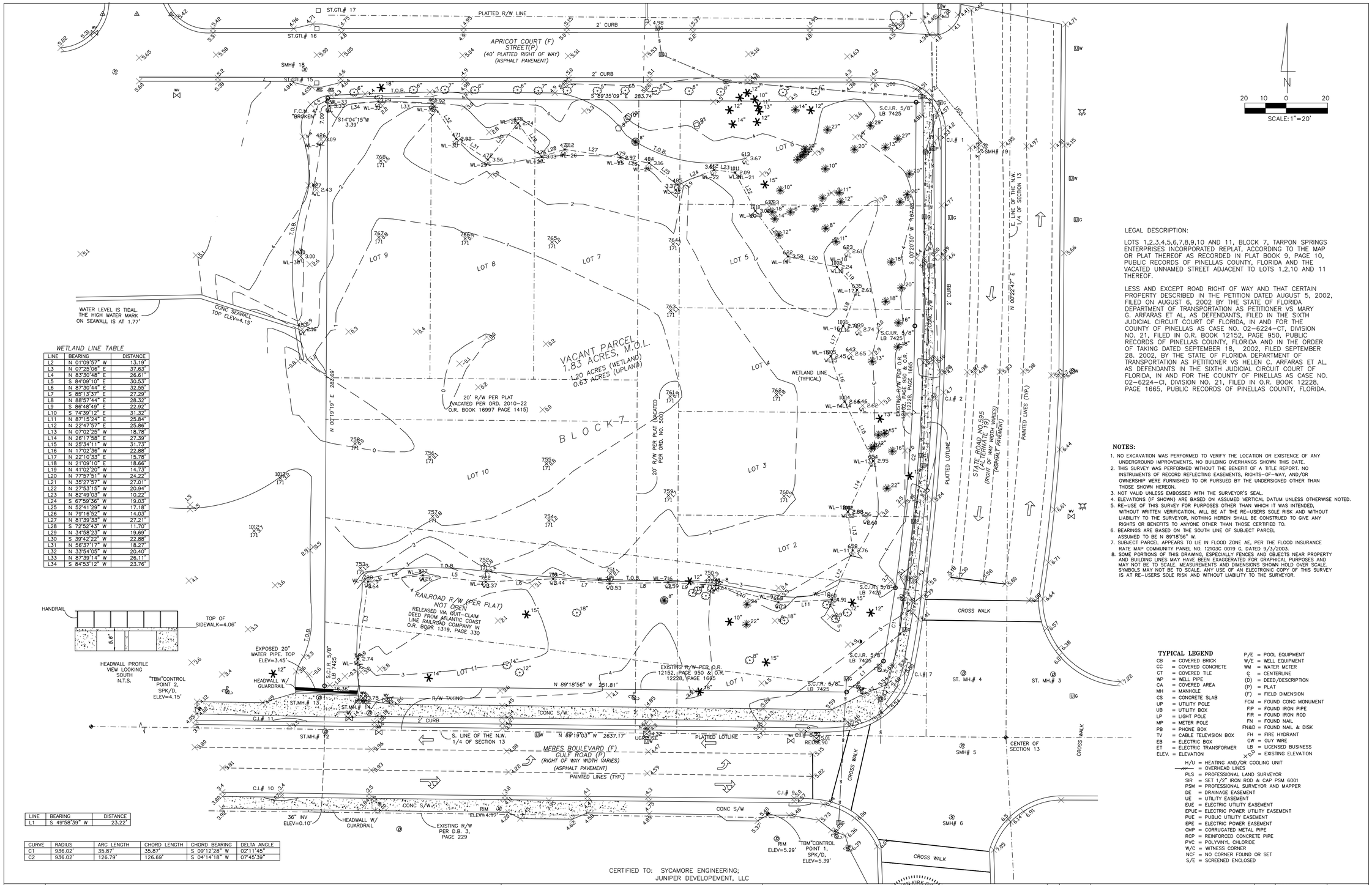

WETLAND LINE TABLE

LINE	BEARING	DISTANCE
L2	N 01°09'57" W	13.19'
L3	N 07°25'06" E	37.63'
L4	N 83°30'48" E	26.61'
L5	S 84°09'10" E	30.53'
L6	N 87°30'44" E	32.55'
L7	S 85°13'37" E	27.29'
L8	N 88°57'44" E	28.32'
L9	S 86°48'49" E	22.92'
L10	S 74°39'12" E	31.32'
L11	N 87°15'24" E	25.84'
L12	N 22°47'57" E	25.86'
L13	N 07°02'25" W	18.78'
L14	N 26°17'58" E	27.39'
L15	N 25°34'11" W	31.73'
L16	N 17°02'36" W	22.88'
L17	N 22°10'33" E	15.78'
L18	N 21°09'10" E	18.66'
L19	N 41°02'20" W	14.73'
L20	N 77°57'51" W	24.22'
L21	N 35°27'57" W	27.01'
L22	N 27°53'15" W	20.94'
L23	N 82°49'03" W	10.22'
L24	S 67°59'36" W	19.03'
L25	N 52°41'29" W	17.18'
L26	N 79°18'52" W	14.03'
L27	N 81°39'33" W	27.21'
L28	S 72°52'43" W	11.70'
L29	N 34°58'23" W	19.69'
L30	S 39°42'22" W	22.88'
L31	N 56°37'17" W	18.27'
L32	N 33°54'05" W	20.40'
L33	N 87°39'14" W	26.11'
L34	S 84°53'12" W	23.76'

LINE	BEARING	DISTANCE
L1	S 49°58'39" W	23.22'

CURVE	RADIUS	ARC LENGTH	CHORD LENGTH	CHORD BEARING	DELTA ANGLE
C1	936.02'	35.87'	35.87'	S 09°12'28" W	02°11'45"
C2	936.02'	126.79'	126.69'	S 04°14'18" W	07°45'39"

LEGAL DESCRIPTION:

LOTS 1,2,3,4,5,6,7,8,9,10 AND 11, BLOCK 7, TARPON SPRINGS ENTERPRISES INCORPORATED REPLAT, ACCORDING TO THE MAP OR PLAT THEREOF AS RECORDED IN PLAT BOOK 9, PAGE 10, PUBLIC RECORDS OF PINELLAS COUNTY, FLORIDA AND THE VACATED UNNAMED STREET ADJACENT TO LOTS 1,2,10 AND 11 THEREOF.

LESS AND EXCEPT ROAD RIGHT OF WAY AND THAT CERTAIN PROPERTY DESCRIBED IN THE PETITION DATED AUGUST 5, 2002, FILED ON AUGUST 6, 2002 BY THE STATE OF FLORIDA DEPARTMENT OF TRANSPORTATION AS PETITIONER VS MARY G. ARFARAS ET AL, AS DEFENDANTS, FILED IN THE SIXTH JUDICIAL CIRCUIT COURT OF FLORIDA, IN AND FOR THE COUNTY OF PINELLAS AS CASE NO. 02-6224-CT, DIVISION NO. 21, FILED IN O.R. BOOK 12152, PAGE 950, PUBLIC RECORDS OF PINELLAS COUNTY, FLORIDA AND IN THE ORDER OF TAKING DATED SEPTEMBER 18, 2002, FILED SEPTEMBER 28, 2002, BY THE STATE OF FLORIDA DEPARTMENT OF TRANSPORTATION AS PETITIONER VS HELEN C. ARFARAS ET AL, AS DEFENDANTS IN THE SIXTH JUDICIAL CIRCUIT COURT OF FLORIDA, IN AND FOR THE COUNTY OF PINELLAS AS CASE NO. 02-6224-CI, DIVISION NO. 21, FILED IN O.R. BOOK 12228, PAGE 1665, PUBLIC RECORDS OF PINELLAS COUNTY, FLORIDA.

NOTES:

1. NO EXCAVATION WAS PERFORMED TO VERIFY THE LOCATION OR EXISTENCE OF ANY UNDERGROUND IMPROVEMENTS, NO BUILDING OVERHANGS SHOWN THIS DATE.
2. THIS SURVEY WAS PERFORMED WITHOUT THE BENEFIT OF A TITLE REPORT. NO INSTRUMENTS OF RECORD REFLECTING EASEMENTS, RIGHTS-OF-WAY, AND/OR OWNERSHIP WERE FURNISHED TO OR PURSUED BY THE UNDERSIGNED OTHER THAN THOSE SHOWN HEREON.
3. NOT VALID UNLESS EMBOSSED WITH THE SURVEYOR'S SEAL.
4. ELEVATIONS (IF SHOWN) ARE BASED ON ASSUMED VERTICAL DATUM UNLESS OTHERWISE NOTED.
5. RE-USE OF THIS SURVEY FOR PURPOSES OTHER THAN WHICH IT WAS INTENDED, WITHOUT WRITTEN VERIFICATION, WILL BE AT THE RE-USERS SOLE RISK AND WITHOUT LIABILITY TO THE SURVEYOR, NOTHING HEREIN SHALL BE CONSTRUED TO GIVE ANY RIGHTS OR BENEFITS TO ANYONE OTHER THAN THOSE CERTIFIED TO.
6. BEARINGS ARE BASED ON THE SOUTH LINE OF SUBJECT PARCEL ASSUMED TO BE N 89°18'56" W.
7. SUBJECT PARCEL APPEARS TO LIE IN FLOOD ZONE AE, PER THE FLOOD INSURANCE RATE MAP COMMUNITY PANEL NO. 12103C 0019 G, DATED 9/3/2003.
8. SOME PORTIONS OF THIS DRAWING, ESPECIALLY FENCES AND OBJECTS NEAR PROPERTY AND BUILDING LINES MAY HAVE BEEN EXAGGERATED FOR GRAPHICAL PURPOSES AND MAY NOT BE TO SCALE. MEASUREMENTS AND DIMENSIONS SHOWN HOLD OVER SCALE. SYMBOLS MAY NOT BE TO SCALE. ANY USE OF AN ELECTRONIC COPY OF THIS SURVEY IS AT RE-USERS SOLE RISK AND WITHOUT LIABILITY TO THE SURVEYOR.

TYPICAL LEGEND

CB = COVERED BRICK	P/E = POOL EQUIPMENT
CC = COVERED CONCRETE	W/E = WELL EQUIPMENT
CT = COVERED TILE	WM = WATER METER
WP = WELL PIPE	℄ = CENTERLINE
CA = COVERED AREA	(D) = DEED/DESCRIPTION
MH = MANHOLE	(P) = PLAT
CS = CONCRETE SLAB	(F) = FIELD DIMENSION
UP = UTILITY POLE	FCM = FOUND CONC MONUMENT
UB = UTILITY BOX	FIP = FOUND IRON PIPE
LP = LIGHT POLE	FIR = FOUND IRON ROD
MP = METER POLE	FN = FOUND NAIL
PB = PHONE BOX	FN&D = FOUND NAIL & DISK
TV = CABLE TELEVISION BOX	FH = FIRE HYDRANT
EB = ELECTRIC BOX	GW = GUY WIRE
ET = ELECTRIC TRANSFORMER	LB = LICENSED BUSINESS
ELEV. = ELEVATION	X'0.0 = EXISTING ELEVATION

H/U = HEATING AND/OR COOLING UNIT
OHW = OVERHEAD LINES
PLS = PROFESSIONAL LAND SURVEYOR
SIR = SET 1/2" IRON ROD & CAP PSM 6001
PSM = PROFESSIONAL SURVEYOR AND MAPPER
DE = DRAINAGE EASEMENT
UE = UTILITY EASEMENT
EUE = ELECTRIC UTILITY EASEMENT
EPUE = ELECTRIC POWER UTILITY EASEMENT
PUE = PUBLIC UTILITY EASEMENT
EPE = ELECTRIC POWER EASEMENT
CMP = CORRUGATED METAL PIPE
RCP = REINFORCED CONCRETE PIPE
PVC = POLYVINYL CHLORIDE
W/C = WITNESS CORNER
NCF = NO CORNER FOUND OR SET
S/E = SCREENED ENCLOSED

CERTIFIED TO: SYCAMORE ENGINEERING;
JUNIPER DEVELOPEMENT, LLC

DRAWN: DG
CHECKED: DR
Q.C.: GF

ACCU-SURV SURVEYING AND MAPPING, LLC

4440 SPRING LAKE HIGHWAY
BROOKSVILLE, FLORIDA 34601
Phone: (813) 949-6506
Fax: (813) 856-4541
ACCUSURV@GMAIL.COM

TREE, TOPO AND BOUNDARY SURVEY

DARREN KIRK GIBSON - LICENSED PSM6001
DATE: APRIL 9, 2024

NO.	DATE	REVISIONS	APP'D BY

JOB NO.: 2404-007WL
FILE NAME: 2404-007WL
DATE OF FIELD WORK: N/A
SCALE: 1"=20'
SHT. 1 OF 1

THE DESIGN AND IDEAS INCORPORATED HEREIN, AS AN INSTRUMENT OF PROFESSIONAL SERVICE IS PROPERTY OF SYCAMORE ENGINEERING, INC. DIMENSIONS SHOULD NOT BE OBTAINED BY USING SCALING OF THE PLAN. DIMENSIONS CAN BE OBTAINED BY CONTACTING SYCAMORE ENGINEERING, INC. DIRECTLY. © 2018
THIS PROJECT WITHOUT WRITTEN AUTHORIZATION FROM SYCAMORE ENGINEERING, INC. DIMENSIONS SHOULD NOT BE OBTAINED BY USING SCALING OF THE PLAN. DIMENSIONS CAN BE OBTAINED BY CONTACTING SYCAMORE ENGINEERING, INC. DIRECTLY. © 2018
THE DESIGN AND IDEAS INCORPORATED HEREIN, AS AN INSTRUMENT OF PROFESSIONAL SERVICE IS PROPERTY OF SYCAMORE ENGINEERING, INC. DIMENSIONS SHOULD NOT BE OBTAINED BY USING SCALING OF THE PLAN. DIMENSIONS CAN BE OBTAINED BY CONTACTING SYCAMORE ENGINEERING, INC. DIRECTLY. © 2018

GENERAL CONSTRUCTION NOTES

1. ELEVATIONS (IF SHOWN) ARE BASED ON ASSUMED VERTICAL DATUM NGVD 29. BEARINGS ARE BASED ON THE SOUTH LINE OF SUBJECT PARCEL ASSUMED TO BE N 89°18'56" W. THE CONVERSION TO N.A.V.D. 1988 = N.G.V.D 1929- 0.85'.
2. ALL DESIGN AND CONSTRUCTION SHALL CONFORM TO THE MINIMUM STANDARDS SET FORTH BY CITY OF TARPON SPRINGS..
3. ALL WORK PERFORMED SHALL COMPLY WITH THE REGULATIONS AND ORDINANCES OF THE VARIOUS GOVERNMENTAL AGENCIES HAVING JURISDICTION OVER THE WORK.
4. ALL WORKMANSHIP AND MATERIALS USED IN THE CONSTRUCTION OF THIS PROJECT SHALL CONFORM TO FDOT'S "STANDARD SPECIFICATIONS FOR ROADWORK AND BRIDGE CONSTRUCTION", LATEST EDITION, AND THE LATEST CITY OF TARPON SPRINGS STANDARDS, UNLESS OTHERWISE INDICATED.
5. SIGNS AND BARRICADES TO BE ACCORDING TO FDOT MANUAL OF SAFE PRACTICES; REFERENCE FDOT INDEXES 600 THRU 650 AND 17349 PER ROADWAY AND TRAFFIC DESIGN STANDARDS LATEST EDITION.
6. THE CONTRACTOR SHALL NOTIFY THE APPROPRIATE PUBLIC AGENCY(IES) PRIOR TO COMMENCING WORK WITHIN THEIR JURISDICTION(S).
7. IT IS THE CONTRACTOR'S RESPONSIBILITY TO BECOME FAMILIAR WITH THE PERMIT AND INSPECTION REQUIREMENTS SPECIFIED BY THE VARIOUS GOVERNMENTAL AGENCIES AND THE ENGINEER. THE CONTRACTOR SHALL OBTAIN ALL NECESSARY PERMITS PRIOR TO CONSTRUCTION AND SCHEDULE INSPECTION ACCORDING TO AGENCY INSTRUCTIONS.
8. THE CONTRACTOR SHALL CHECK PLANS FOR CONFLICTS AND DISCREPANCIES PRIOR TO CONSTRUCTION. THE CONTRACTOR SHALL NOTIFY THE ENGINEER OF ANY CONFLICT BEFORE PERFORMING ANY WORK IN THE AFFECTED AREA.
9. IT IS THE RESPONSIBILITY OF THE CONTRACTOR TO ESTABLISH IN THE FIELD RIGHT OF WAY LINES, BENCHMARKS (ELEV.), COORDINATES, CENTER LINES AND STATIONING AS REQUIRED TO CONSTRUCT THIS PROJECT.
10. THE CONTRACTOR IS RESPONSIBLE FOR REPAIRING ANY DAMAGE TO EXISTING FACILITIES, ABOVE OR BELOW GROUND, THAT MAY OCCUR AS A RESULT OF THE WORK PERFORMED BY THE CONTRACTOR CALLED FOR IN THIS CONTRACT.
11. LOCATIONS, ELEVATIONS, AND DIMENSIONS OF EXISTING UTILITIES, STRUCTURES AND OTHER FEATURES ARE SHOWN ACCORDING TO THE BEST INFORMATION AVAILABLE AT TIME OF PREPARATION OF THESE PLANS. THE CONTRACTOR SHALL VERIFY THE LOCATIONS, ELEVATIONS, AND DIMENSIONS OF ALL EXISTING UTILITIES, STRUCTURES AND OTHER FEATURES AFFECTING THIS WORK PRIOR TO CONSTRUCTION.
12. CONTRACTOR SHALL SUBMIT SHOP DRAWINGS ON ALL PRE-CAST AND MANUFACTURED ITEMS TO THE ENGINEER FOR APPROVAL. FAILURE TO OBTAIN APPROVAL BEFORE INSTALLATION MAY RESULT IN REMOVAL AND REPLACEMENT AT CONTRACTOR'S EXPENSE.
13. ALL PIPE LENGTHS ARE PLUS OR MINUS. PIPE MEASUREMENTS ARE TO CENTER OF STRUCTURES OR FITTINGS. PIPE MEASUREMENTS FOR STRAIGHT ENDWALL END SECTIONS ARE TO END OF PIPE.
14. ALL PIPES TO BE CONSTRUCTED WITH 3' MINIMUM COVER UNLESS OTHERWISE NOTED ON THE PLANS.
15. ALL ROCKS OR STONES LARGER THAN 6" IN DIAMETER SHALL BE REMOVED FROM THE BACKFILL MATERIAL. BACKFILL MATERIAL PLACED WITHIN 1-FOOT OF PIPING AND APPURTENANCES SHALL NOT CONTAIN ANY STONES LARGER THAN 2" IN DIAMETER.
16. ALL UNDERGROUND UTILITIES MUST BE IN PLACE AND TESTED OR INSPECTED PRIOR TO ROAD BASE AND SURFACE CONSTRUCTION.
17. ALL WATER LINES AND SANITARY SEWER LINES ARE PVC UNLESS OTHERWISE NOTED.
18. ALL SIDEWALKS TO BE A MINIMUM 3,000 PSI CONCRETE AND 4" THICK AND SHALL BE REINFORCED WITH 1.4 x 1.4 W.W.M.
19. ALL CONCRETE WORK SHALL HAVE A MINIMUM ULTIMATE COMPRESSIVE STRENGTH OF 3,000 PSI (28 DAY STRENGTH), UNLESS OTHERWISE INDICATED.
20. CONTRACTOR TO INCLUDE TEMPORARY WATER SOURCE DURING CONSTRUCTION IN THE CONTRACT BID.
21. ALL GRATE INLETS SHALL BE GALVANIZED OR AS APPROVED BY ENGINEER OF RECORD.

CLEARING AND PREPARATION NOTES

1. PRIOR TO ANY SITE CLEARING, ALL TREES SHOWN TO REMAIN AS INDICATED ON THE PLANS SHALL BE PROTECTED IN ACCORDANCE WITH CITY OF TARPON SPRINGS TREE ORDINANCES AND DETAILS CONTAINED IN THESE PLANS. IT SHALL BE THE CONTRACTOR'S RESPONSIBILITY TO MAINTAIN THESE TREES IN GOOD CONDITION. NO TREE SHOWN TO REMAIN SHALL BE REMOVED WITHOUT APPROVAL FROM THE OWNER.
2. THE CONTRACTOR IS TO PREPARE THE SITE PRIOR TO BEGINNING ACTUAL CONSTRUCTION IN ACCORDANCE WITH THE PROJECT SOILS REPORT. COPIES OF THE SOILS REPORT ARE AVAILABLE THROUGH THE DEVELOPER/OWNER OR THE DEVELOPER REPRESENTATIVE. QUESTIONS REGARDING SITE PREPARATION REQUIREMENTS DESCRIBED IN THE SOILS REPORT ARE TO BE DIRECTED TO THE SOILS TESTING COMPANY.
3. CONTRACTOR SHALL CLEAR AND GRUB ONLY THOSE PORTIONS OF THE SITE NECESSARY FOR CONSTRUCTION. DISTURBED AREAS WILL BE SEEDED, MULCHED, SODDED OR PLANTED WITH OTHER APPROVED LANDSCAPE MATERIAL WITHIN ONE WEEK FOLLOWING CONSTRUCTION.
4. THE TOP 4" TO 6" OF SOIL REMOVED DURING CLEARING AND GRUBBING SHALL BE STOCKPILED ON-SITE IN A LOCATION DESIGNATED BY THE DEVELOPER/OWNER/CITY TO BE USED FOR LANDSCAPING PURPOSES, UNLESS OTHERWISE DIRECTED BY DEVELOPER/OWNER. REMAINING EARTHWORK THAT RESULTS FROM CLEARING AND GRUBBING OR SITE EXCAVATION IS TO BE UTILIZED ON-SITE IF REQUIRED, PROVIDED THAT THE MATERIAL IS DEEMED SUITABLE FOR CONSTRUCTION BY THE GEOTECHNICAL ENGINEERING COMPANY. EXCESS MATERIAL IS TO BE EITHER STOCKPILED ON THE SITE OR DISPOSED OF AS DIRECTED BY THE OWNER. CONTRACTOR IS RESPONSIBLE FOR ACQUIRING ANY PERMITS THAT ARE NECESSARY FOR REMOVING EXCESS EARTHWORK FROM THE SITE.
5. ALL CONSTRUCTION DEBRIS AND OTHER WASTE MATERIAL SHALL BE DISPOSED OF OFF-SITE IN ACCORDANCE WITH APPLICABLE REGULATORY AGENCY REQUIREMENTS.

STANDARD CITY OF TARPON SPRINGS NOTES:

1. ALL UTILITY CONSTRUCTION SHALL COMPLY WITH THE CITY OF TARPON SPRINGS STANDARDS FOR DESIGN AND CONSTRUCTION OF WATER AND WASTEWATER FACILITIES SPECIFICATIONS, LATEST EDITION.
2. ALL ON-SITE WATER AND SEWER FACILITIES SHALL BE OWNED AND MAINTAINED BY THE OWNER-DEVELOPER.
3. INSTALLATION OF FUEL STORAGE TANKS REQUIRES REVIEW AND APPROVAL BY THE FIRE MARSHAL AND THE ISSUANCE OF A SEPARATE BUILDING PERMIT. APPROVAL OF THE SITE PLAN DOES NOT CONSTITUTE APPROVAL OF THE LOCATION OF THE FUEL TANKS.
4. ALL PROPOSED SIGNS MUST BE APPLIED FOR, APPROVED, AND PERMITTED ON AN INDIVIDUAL BASIS APART FROM ANY ULTIMATELY-APPROVED SITE PLAN. APPROVED OF THIS SITE PLAN DOES NOT CONSTITUTE APPROVAL OF ANY SIGNAGE.
5. HANDICAP PARKING SPACES WILL BE PROPERLY SIGNED AND STRIPED IN ACCORDANCE WITH FLORIDA STATUTE 316, THE MANUAL ON UNIFORM TRAFFIC CONTROL DEVICES, OR THE CITY OF TARPON SPRINGS STANDARDS.
6. THE ARCHITECT/ENGINEER CERTIFIES THAT THE SITE HAS BEEN DESIGNED IN ACCORDANCE WITH THE AMERICAN WITH DISABILITIES ACT.
7. ALL ON-SITE PARKING SPACES WILL BE STRIPED AND SIGNED IN ACCORDANCE WITH THE MANUAL ON UNIFORM TRAFFIC CONTROL DEVICES, SHALL BE STRIPED IN WHITE. PARKING SPACES, DIRECTIONAL ARROWS AND STOP BARS SHALL BE STRIPED IN WHITE PAINT. IT SHALL BE THE OWNER/DEVELOPERS RESPONSIBILITY TO PROPERLY SIGN AND STRIPE THE SITE IN ACCORDANCE WITH APPLICABLE STANDARDS.
8. THE OWNER/DEVELOPER ACKNOWLEDGES THAT THIS APPROVAL DOES NOT INCLUDE ANY WORK IN CITY, COUNTY OR STATE RIGHT-OF-WAY. ALL RIGHT OF WAY WORK SHALL BE A FUNCTION OF AN APPROVED CITY OF TARPON SPRINGS, PINELLAS COUNTY & FDOT RIGHT-OF-WAY USE PERMIT.
9. ALL CLEAR-SITE AREAS SHALL BE KEPT FREE OF ANY SIGNAGE, PLANTINGS, TREES, ETC. IN EXCESS OF THREE-AND-A-HALF (3-1/2) FEET IN HEIGHT.
10. NO IRRIGATION SYSTEM OR LANDSCAPING SHALL BE INSTALLED IN ANY COUNTY, CITY OR STATE RIGHT-OF-WAY WITHOUT ISSUANCE OF APPROPRIATE RIGHT-OF-WAY USE PERMIT.
11. THE OWNER/DEVELOPER ACKNOWLEDGES THAT THE SITE AND ITS SUBSEQUENT BUILDING PERMITS SHALL COMPLY WITH ALL REZONING/MPUD/PUD CONDITIONS.
12. ALL STRUCTURES, INCLUDING BUFFER WALLS, RETAINING WALLS, SIGNAGE, ETC. REQUIRE SEPARATE BUILDING PERMITS.

PAVING AND GRADING NOTES

1. ALL DELETERIOUS SUBSURFACE MATERIAL (I.E. MULCH, PEAT, BURIED DEBRIS) IS TO BE EXCAVATED IN ACCORDANCE WITH THESE PLANS OR AS DIRECTED BY THE OWNER, THE ENGINEER, OR REPRESENTATIVE FROM THE SOIL TESTING COMPANY. DELETERIOUS MATERIAL IS TO BE STOCKPILED OR REMOVED FROM THE SITE AS DIRECTED BY OWNER REPRESENTATIVE. EXCAVATED AREAS ARE TO BE BACK FILLED WITH APPROVED MATERIALS AND COMPACTED AS SHOWN ON THESE PLANS AND IN ACCORDANCE WITH THE SOILS REPORT. CONTRACTOR IS RESPONSIBLE FOR ACQUIRING ANY PERMITS THAT ARE NECESSARY FOR REMOVING DELETERIOUS MATERIAL FROM THE SITE.
2. THE CONTRACTOR SHALL BE RESPONSIBLE FOR PROTECTING EXCAVATIONS AGAINST COLLAPSE AND WILL PROVIDE BRACING, SHEETING OR SHORING AS NECESSARY. DE-WATERING METHODS SHALL BE USED AS REQUIRED TO KEEP TRENCHES DRY WHILE PIPE AND APPURTENANCES ARE BEING PLACED.
3. ALL NECESSARY FILL AND EMBANKMENT THAT IS PLACED DURING CONSTRUCTION SHALL CONSIST OF MATERIAL SPECIFIED BY THE SOIL TESTING COMPANY OR ENGINEER AND BE PLACED AND COMPACTED ACCORDING TO THESE PLANS OR THE REFERENCED SOIL REPORTS.
4. PROPOSED SPOT ELEVATIONS REPRESENT FINISHED PAVEMENT OR GROUND SURFACE GRADE UNLESS OTHERWISE NOTED ON DRAWINGS.
5. IT MAY BE NECESSARY TO FIELD ADJUST PAVEMENT ELEVATIONS TO PRESERVE THE ROOT SYSTEMS OF TREES SHOWN TO BE SAVED. CONTRACTOR TO COORDINATE WITH ENGINEER PRIOR TO ANY ELEVATION CHANGES.
6. CONTRACTOR SHALL TRIM, TACK AND MATCH EXISTING PAVEMENT AT LOCATIONS WHERE NEW PAVEMENT MEETS EXISTING PAVEMENT.
7. CONTRACTOR TO PROVIDE A ½" TO 1" BITUMINOUS EXPANSION JOINT MATERIAL WITH SEALER AT ABUTMENT OF CONCRETE AND OTHER MATERIALS (BUILDING, OTHER POURED CONCRETE, ETC.).
8. ALL PAVEMENT MARKINGS SHALL BE MADE WITH PERMANENT THERMOPLASTIC AND SHALL CONFORM TO FDOT STANDARD INDEX NO. 17346, SHEETS 1-9. PARKING STALL STRIPING TO BE 6" WIDE PAINTED STRIPES UNLESS SPECIFIED AND NOTED DIFFERENTLY ON PLAN.
9. THE CONTRACTOR WILL STABILIZE BY SEED AND MULCH, SOD, OR OTHER APPROVED MATERIALS ANY DISTURBED AREAS WITHIN ONE WEEK FOLLOWING CONSTRUCTION OF THE UTILITY SYSTEMS AND PAVEMENT AREAS. CONTRACTOR SHALL MAINTAIN SUCH AREAS UNTIL FINAL ACCEPTANCE BY THE OWNER.

TESTING AND INSPECTION REQUIREMENTS (PAVING)

1. THE CONTRACTOR IS RESPONSIBLE FOR COORDINATING APPLICABLE TESTING WITH THE SOILS ENGINEER. UPON COMPLETION OF THE WORK SOILS ENGINEER WILL SUBMIT CERTIFICATIONS TO OWNER AND THE ENGINEER STATING THAT ALL REQUIREMENTS HAVE BEEN MET. THE TESTING REQUIREMENTS SHALL AT A MINIMUM MEET OR EXCEED THOSE SPECIFIED IN THE CITY OF TARPON SPRINGS LAND DEVELOPMENT REQUIREMENTS

WATER SYSTEM NOTES

1. ALL WATER SYSTEM WORK SHALL CONFORM WITH CITY OF TARPON SPRINGS "STANDARD DETAILS" LATEST EDITION.
2. ALL WATER MAINS SHALL HAVE A MINIMUM OF 36 INCHES OF COVER.
3. A VERTICAL CLEARANCE OF 18 INCHES SHALL BE MAINTAINED BETWEEN SANITARY SEWERS AND WATER MAINS. IF CLEARANCES CANNOT BE ACHIEVED BY ADJUSTING WATER MAINS THE SANITARY SEWER SHALL BE CONSTRUCTED OF PRESSURE CLASS 350 DUCTILE IRON PIPE FOR NO LESS THAN 10 FEET ON EACH SIDE OF THE CONFLICT POINT. AS AN ALTERNATE THE SANITARY SEWER MAY BE PLACED IN A SLEEVE OR ENCASED IN CONCRETE FOR THE REQUIRED 10 FEET ON EACH SIDE OF THE CONFLICT POINT.
4. A LATERAL SEPARATION OF 10 FEET SHALL BE MAINTAINED BETWEEN WATER MAINS AND SANITARY SEWER.
5. CONFLICTS BETWEEN WATER AND STORM OR SANITARY SEWER TO BE RESOLVED BY ADJUSTING THE WATER LINE AS NECESSARY.
6. WATER MAINS SMALLER THAN 1 ½" SHALL BE SCHEDULE 40.
7. ALL PVC WATER MAINS 1 ½" THROUGH 3" SHALL BE CLASS 200 AND MEET THE REQUIREMENTS OF SDR 21 IN ACCORDANCE WITH ASTM D2241 .
8. ALL ON SITE PVC POTABLE WATER MAINS 4" AND ABOVE SHALL BE IN ACCORDANCE WITH AWWA C900. PIPE SHALL BE DR 18 (235 PSI).
9. ALL FIRE MAINS (IF PROPOSED), SHALL BE CONSTRUCTED OF PVC AND SHALL BE AWWA C900 DR 18 (235 PSI).
10. ALL DUCTILE IRON PIPE SHALL BE PRESSURE CLASS 350 IN ACCORDANCE WITH ANSI A 21.50 (AWWA C150) AND PIPE SHALL RECEIVE EXTERIOR ASPHALTIC COATING IN ACCORDANCE WITH ANSI A 21.51 (AWWA C151), AND INTERIOR OF THE DUCTILE IRON PIPE SHALL BE CEMENT LINED IN ACCORDANCE WITH ANSI A 21.4 (AWWA C104).
11. ALL FITTINGS 2" AND SMALLER SHALL BE SCHEDULE 80 PVC WITH SOLVENT WELDED SLEEVE TYPE JOINTS.
12. ALL FITTINGS LARGER THAN 2" SHALL BE DUCTILE IRON PRESSURE CLASS 350 IN ACCORDANCE WITH AWWA C110 WITH A PRESSURE RATING OF 350 PSI. JOINTS SHALL BE MECHANICAL JOINTS IN ACCORDANCE WITH AWWA C111. FITTINGS SHALL BE CEMENT MORTER LINED AND COATED IN ACCORDANCE WITH AWWA C104. ALL FITTINGS SHALL BE RESTRAINED USING MEGALUG OR APPROVED EQUAL.
13. ALL WATER VALVES TO BE LOCATED IN GRASSED AREAS.
14. ALL DUCTILE IRON PIPE AND FITTINGS SHALL BE ENCASED IN POLY-WRAP IN ACCORANCE WITH ANSI A21.5/AWWA C105.
15. RESTRAINT JOINTS SHALL BE PROVIDED AT ALL FITTINGS (AND HYDRANTS, IF PROPOSED) AS SHOWN ON DETAILS.
16. ALL WATER MAINS SHALL HAVE A SUITABLE MAGNETIC LOCATOR TAPE BURIED OVER THE WATER MAIN, APPROXIMATELY ONE FOOT BELOW GRADE. TAPE SHALL BE CONTINUOUS BETWEEN VALVES AND SECURED TO EACH VALVE, WHERE OTHER LINES OR SERVICE LINES JOIN THE VALVE, THE TAPE USED FOR DETECTION OF THESE LINES SHALL BE SECURED TO THE MAIN LINE TAPE. THE TAPE SHALL BE AT LEAST 5-1/2 MIL THICK, 2 INCH MINIMUM WIDTH AND MADE WITH AN ALUMINUM MATERIAL SANDWICHED BETWEEN 2 LAYERS OF POLYETHYLENE. IT SHALL HAVE IMPRINTED, IN PERMANENT BLACK INK WITH ONE INCH LETTERS, "CAUTION WATER LINE BURIED BELOW" ON BLUE BACKGROUND.
17. POINTS OF CONNECTION OF THE EXTERNAL WATER LINES ARE TO COINCIDE WITH THE BUILDING PLUMBING AS SHOWN ON THE BUILDING PLUMBING PLANS. CONNECTION LOCATIONS SHOWN ON THESE PLANS ARE APPROXIMATE. IT IS THE CONTRACTOR'S RESPONSIBILITY TO COORDINATE THE EXACT CONNECTION POINT.
18. CONTRACTOR SHALL VERIFY LOCATION OF WATER SERVICE AT EACH BUILDING PRIOR TO CONSTRUCTION OF SERVICE LINE.
19. CONTRACTOR TO INSTALL TEMPORARY BLOWOFFS AT THE END OF WATER SERVICE LATERALS TO BUILDINGS TO ASSURE ADEQUATE FLUSHING AND DISINFECTING.
20. WATER LINE TYPE AND SPECIFICATION SHOULD BE AS LISTED ABOVE EXCEPT IF SPECIFIED DIFFERENTLY ON PLAN.

TESTING AND INSPECTION REQUIREMENTS

1. PRESSURE TESTS TO BE IN ACCORDANCE WITH CITY OF TARPON SPRINGS REQUIREMENTS AND AWWA C600 (FOR DUCTILE IRON) AND AWWA C605 (FOR PVC).
2. ALL COMPONENTS OF THE WATER SYSTEM, INCLUDING FITTINGS, HYDRANTS, CONNECTIONS, AND VALVES SHALL BE PROPERLY PRESSURE TESTED AND ACCEPTED BY THE ENGINEER. CONTRACTOR TO NOTIFY THE ENGINEER 48 HOURS IN ADVANCE OF PERFORMING TESTS.
3. CONTRACTOR TO PERFORM CHLORINATING AND BACTERIOLOGICAL SAMPLING. COPIES OF ALL BACTERIOLOGICAL TESTS TO BE SUBMITTED TO THE ENGINEER. LOCATIONS OF CHLORINATING AND SAMPLING POINTS TO BE SUBMITTED WITH TEST RESULTS ALONG WITH AS-BUILT DRAWINGS.
4. MINIMUM PRESSURE FOR THE HYDROSTATIC AND LEAKAGE TESTS SHALL BE 150 PSI FOR POTABLE WATER MAIN, IN ACCORDANCE WITH AWWA C600 FOR A MINIMUM OF 2 HOURS.

SANITARY SEWER NOTES

1. ALL SANITARY SEWER WORK SHALL CONFORM WITH APPLICABLE AGENCY STANDARDS AND SPECIFICATIONS.
2. PRIOR TO COMMENCING WORK WHICH REQUIRES CONNECTING NEW SANITARY SEWER LINES TO EXISTING LINES OR APPURTENANCES, THE CONTRACTOR SHALL VERIFY LOCATION, ELEVATION AND SIZE OF EXISTING LINE AT THE POINT OF CONNECTION AND NOTIFY THE ENGINEER OF ANY CONFLICTS OR DISCREPANCIES WITH DESIGN INFORMATION SHOWN IN THESE PLANS.
3. ALL SANITARY SEWER MAINS AND LATERALS ONSITE SHALL HAVE A MINIMUM OF 36 INCHES OF COVER UNLESS OTHERWISE SHOWN ON THE PLANS. THE DEPTH OF COVER OVER ALL MAINS, WITHIN RIGHT-OF-WAY OR EASEMENT, SHALL BE NOT LESS THAN 48 INCHES (EXCEPT FOR LATERALS). THE DEPTH OF THE LATERAL AT THE PROPERTY LINE (MEASURED FROM THE CROWN OF PIPE) SHALL BE NO LESS THAN 36 INCHES AND NO GREATER THAN 48 INCHES BELOW DESIGN GRADE.
4. A VERTICAL CLEARANCE OF 18 INCHES BETWEEN THE OUTSIDE OF THE OTHER UTILITY LINE(S) AND THE OUTSIDE OF THE GRAVITY SEWERS SHALL BE MAINTAINED BETWEEN SANITARY SEWER AND WATER MAINS. A VERTICAL CLEARANCE OF 18 INCHES SHALL BE MAINTAINED BETWEEN SANITARY SEWER AND STORM SEWERS. IF ABOVE CLEARANCES CANNOT BE ACHIEVED, THE SANITARY SEWER SHALL BE CONSTRUCTED OF PRESSURE CLASS 350 DUCTILE IRON PIPE FOR NO LESS THAN 10 FEET ON EACH SIDE OF THE CONFLICT POINT. AS AN ALTERNATE THE SANITARY SEWER MAY BE PLACED IN A SLEEVE OR ENCASED IN CONCRETE FOR THE REQUIRED 10 FEET ON EACH SIDE OF THE CONFLICT POINT
5. A LATERAL SEPARATION OF 10 FEET SHALL BE MAINTAINED BETWEEN WATER MAINS AND SANITARY SEWER.
6. ALL ON-SITE PVC GRAVITY SANITARY SEWER PIPE SHALL BE SDR-35, EXCEPT FOR PIPE DEEPER THAN 14 FEET USE SDR-26, IN ACCORDANCE WITH ASTM D3034, ELASTOMERIC GASKET JOINTS SHALL BE UTILIZED UNLESS SPECIFIED AND NOTED DIFFERENTLY ON PLAN.
7. ALL ON-SITE DUCTILE IRON PIPE SHALL BE PRESSURE CLASS 350 AND SHALL RECEIVE INTERIOR AND EXTERIOR BITUMINOUS COATING IN ACCORDANCE WITH ANSI A 21.6, A 21.8, OR A 21.51.
8. ALL DUCTILE IRON PIPE AND FITTINGS TO BE POLY-WRAPPED.
9. SANITARY SERVICE CONNECTION LOCATIONS AND INVERTS SHOWN ON THESE PLANS ARE APPROXIMATE.
10. ALL SANITARY SEWER MAINS AND LATERALS SHALL HAVE A MINIMUM OF 36 INCHES OF COVER UNLESS OTHERWISE SHOWN ON THE PLANS.
11. ALL SANITARY LINES SHALL HAVE A SUITABLE MAGNETIC LOCATOR BURIED APPROXIMATELY ONE-FOOT BELOW GRADE OVER THE FORCE MAIN. THE TAPE SHALL BE CONTINUOUS BETWEEN VALVES AND SECURED TO EACH VALVE. THE TAPE SHALL BE AT LEAST 5-1/2 MIL THICK, 2 INCH MINIMUM WIDTH AND MADE WITH AN ALUMINUM MATERIAL SANDWICHED BETWEEN 2 LAYERS OF POLYETHYLENE. IT SHALL HAVE IMPRINTED IN PERMANENT BLACK INK WITH 1 INCH LETTERS, "CAUTION, SEWER LINE BURIED BELOW", ON GREEN BACKGROUND.
12. CONTRACTOR SHALL VERIFY INVERT ELEVATION OF SANITARY SEWER SERVICE AT THE BUILDING PRIOR TO CONNECTION AND CONSTRUCTION OF SEWER SERVICE LATERAL.

TESTING AND INSPECTION REQUIREMENTS (SANITARY)

1. ALL GRAVITY SEWER PIPING SHALL BE SUBJECT TO INSPECTION BY THE CITY OF TARPON SPRINGS UTILITIES AND ENGINEER OF RECORD PRIOR TO PLACEMENT OF BASE AND PAVING AND AGAIN PRIOR TO OBTAINING CERTIFICATE OF OCCUPANCY.
2. THE CONTRACTOR SHALL PERFORM AN AIR PRESSURE TEST ON ALL GRAVITY SEWERS IN ACCORDANCE WITH THE CITY OF TARPON SPRINGS REQUIREMENTS. SAID TESTS ARE TO BE CERTIFIED BY THE ENGINEER OF RECORD AND SUBMITTED TO THE CITY OF TARPON SPRINGS FOR APPROVAL. COORDINATION OF TESTING AND NOTIFICATION OF ALL PARTIES IS THE CONTRACTOR'S RESPONSIBILITY.
3. MINIMUM PRESSURE FOR THE HYDROSTATIC AND LEAKAGE TESTS FOR FORCE MAINS SHALL BE 150 PSI.

MAINTENANCE OF TRAFFIC NOTES (CITY OF TARPON SPRINGS)

1. THE WORK SPECIFIED UNDER THIS SECTION CONSISTS OF THE MAINTAINING OF VEHICULAR AND PEDESTRIAN TRAFFIC WITHIN THE LIMITS OF THE PROJECT FOR THE DURATION OF THE CONSTRUCTION PERIOD, IN ACCORDANCE WITH THE REQUIREMENTS OF SECTION 102 OF THE FDOT SPECIFICATIONS, AS AMENDED HEREIN AND IN ACCORDANCE WITH THE PLANS.
2. THE ROAD SHALL BE KEPT OPEN TO TWO-WAY TRAFFIC FOR THE DURATION OF THE CONSTRUCTION PERIOD, EXCEPT THAT, DURING NON-PEAK TRAFFIC PERIODS, ONE LANE OF TRAFFIC WILL BE PERMITTED PROVIDED THAT FLAGMEN ARE USED AND PRIOR APPROVAL IS OBTAINED FROM THE CITY. THE CONTRACTOR WILL NOT BE PERMITTED TO ISOLATE RESIDENCES OR PLACES OF BUSINESS. ACCESS SHALL BE PROVIDED TO ALL RESIDENCES AND ALL PLACES OF BUSINESS WHENEVER CONSTRUCTION INTERFERES WITH THE EXISTING MEANS OF ACCESS.
3. THE CONTRACTOR SHALL FURNISH, ERECT AND MAINTAIN ALL NECESSARY TRAFFIC CONTROL AND SAFETY DEVICES, IN ACCORDANCE WITH THE PLANS AND FDOT DESIGN STANDARDS, APPLICABLE EDITION, AND THE STATE OF FLORIDA ROADWAY AND TRAFFIC DESIGN STANDARDS FOR DESIGN, CONSTRUCTION, MAINTENANCE AND UTILITY OPERATIONS FOR STREETS AND HIGHWAYS ON THE STATE MAINTAINED SYSTEMS, APPLICABLE EDITION, AND SHALL TAKE ALL NECESSARY PRECAUTIONS FOR THE PROTECTION OF THE WORK AND THE SAFETY OF THE PUBLIC FOR THE DURATION OF THE CONSTRUCTION PERIOD. THE WORK SPECIFIED UNDER THIS SECTION SHALL INCLUDE REMOVAL OF PAVEMENT MARKINGS, INSTALLATION OF PAVEMENT STRIPING, MARKINGS AND REFLECTIVE MARKERS, AND ALL MATERIALS AND CONSTRUCTION NECESSARY TO CREATE TEMPORARY CONNECTIONS FOR STREET, DRIVEWAYS AND PEDESTRIAN TRAFFIC. THE APPLICABLE EDITION OF THE DOCUMENTS REFERENCED HEREIN SHALL BE THE CURRENT EDITION OR THAT EDITION OF THE RESPECTIVE DOCUMENTS SPECIFIED IN THE PLANS.
4. TEMPORARY CURB (ASPHALTIC OR CONCRETE) SHALL NOT BE USED, WITH THE FOLLOWING EXCEPTION: PORTABLE TEMPORARY LOW PROFILE BARRIER FOR ROADSIDE SAFETY, IN ACCORDANCE WITH FDOT INDEX 412, CAN BE USED IN LIEU OF BARRIER WALLS FOR DESIGN SPEEDS OF 45 MPH OR LESS, WHERE A LOW PROFILE IS DESIRED TO MAINTAIN SIGHT DISTANCE AT INTERSECTIONS AND DRIVEWAYS. PORTABLE TEMPORARY LOW PROFILE BARRIER FOR ROADSIDE SAFETY SHALL BE PAID FOR UNDER THE CONTRACT UNIT VALUE FOR BARRIER WALL (TEMPORARY) LOW PROFILE CONCRETE (LINEAR FOOT), AND WILL BE FULL COMPENSATION FOR FURNISHING, INSTALLING, MAINTAINING, RELOCATING AND REMOVING THE BARRIER WALL. THE CONTRACTOR SHALL NOT RECEIVE ADDITIONAL COMPENSATION FOR RELOCATING THE BARRIER WALL (I.E., FROM ONE CONSTRUCTION PHASE TO ANOTHER). THE APPROVED "PORTABLE TEMPORARY LOW PROFILE BARRIER FOR ROADSIDE SAFETY" IS A PROPRIETARY DESIGN BY THE UNIVERSITY OF FLORIDA. ONLY THOSE BARRIER UNITS CAST BY PRODUCERS LICENSED BY THE UNIVERSITY OF FLORIDA WILL BE ALLOWED FOR INSTALLATION. AVAILABILITY OF THIS DEVICE MAY BE LIMITED AS A RESULT OF DEMAND; THIS SHOULD BE CONSIDERED IN ESTABLISHING PROJECT SCHEDULES CALLING FOR THIS DEVICE.

PINELLAS COUNTY RIGHT-OF-WAY CONSTRUCTION NOTES

1. ALL PROPOSED WORK SHALL COMPLY WITH FOOT INDEX NO. 700.
2. ALL RIGHT-OF-WAY INSTALLATIONS SHALL BE IN ACCORDANCE REFERENCED IN THE STATE OF FLORIDA UTILITIES ACCOMMODATION MANUAL.
3. ALL PROPOSED WORK SHALL COMPLY WITH MINIMUM STANDARDS OF THE PINELLAS COUNTY LAND DEVELOPMENT, ZONING AND/OR RELATED ORDINANCES, AND MINIMUM TESTING FREQUENCY REQUIREMENTS.
4. SIGN AND BARRICADES SHALL BE IN ACCORDANCE OF U.S. DOT "MANUAL ON UNIFORM TRAFFIC CONTROL DEVICES" AND THE FLORIDA DOT (FOOT) DESIGN STANDARDS INDEX 600 THROUGH INDEX 670 (LATEST EDITIONS).
5. IT IS THE RESPONSIBILITY OF THE APPLICANT TO DOCUMENT THE EXISTING CONDITION OF THE RIGHT-OF-WAY PRIOR TO BEGINNING WORK. DOCUMENTATION MAY BE IN THE FORM OF VIDEO OR PHOTOS.
6. SIDEWALKS SHALL BE RECONSTRUCTED WITHIN THREE DAYS OF REMOVAL AND SAFE PEDESTRIAN TRAFFIC SHALL BE MAINTAINED AT ALL TIMES. WHEN EXISTING SIDEWALK IS REMOVED, IT SHALL BE REMOVED TO THE NEAREST JOINT. ANY SECTION OF SIDEWALK THAT BECOMES UNDERMINED SHALL BE REMOVED AND REPLACED. ROADWAY CONNECTIONS REPLACED SHALL MEET CURRENT ADA STANDARDS PER FOOT INDEX 304.
7. INSTALLATIONS INVOLVING CONCRETE AND ASPHALT DRIVEWAYS, IN GOOD CONDITION, SHALL BE ACCOMPLISHED BY JACK AND BORE OR PUSHING. NO JETTING SHALL BE PERMITTED.
8. DISTURBED AREAS WITHIN THE R/W SHALL BE COMPACTED TO 100% OF MAXIMUM DENSITY AND SODDED. DENSITY REPORTS SHALL BE PROVIDED TO THE PINELLAS COUNTY RIGHT-OF-WAY INSPECTOR.
9. ROADWAY PAVEMENT WILL NOT BE OPEN CUT OR DISTURBED. INSTALLATION SHALL BE ACCOMPLISHED BY APPROVED METHODS ONLY.
10. DO NOT DISTURB THE CURB OR PAVEMENT.
11. ALL EXISTING DRAINAGE SHALL BE MAINTAINED AND RESTORED TO DESIGNED, PERMITTED CONDITIONS.
12. MAINTAIN AT LEAST EIGHTEEN INCHES CLEARANCE FROM SANITARY SEWER LINES AND TWELVE INCHES CLEARANCE FROM ALL OTHER UTILITIES IN THE AREA.
13. FIELD LOCATE AND DO NOT DISTURB EXISTING UNDER-DRAIN SYSTEMS.
14. MINIMUM DEPTH AT DITCH CROSSINGS IS 36" BELOW FLOW-LINE.
15. MINIMUM CLEARANCE FOR ROAD BORES FOR EXCAVATIONS/ENTRY AND EXIT POINTS AND ENDS OF CASING/CONDUIT ARE AS FOLLOWS: T

THE DESIGN AND IDEAS INCORPORATED HEREIN, AS AN INSTRUMENT OF PROFESSIONAL SERVICE IS PROPERTY OF SYCAMORE ENGINEERING, INC. IT CAN NOT BE USED OR COPIED FOR ANY OTHER PROJECT WITHOUT WRITTEN AUTHORIZATION FROM SYCAMORE ENGINEERING, INC. DIMENSIONS SHOULD NOT BE OBTAINED BY USING SCALING OF THE PLAN. DIMENSIONS CAN BE OBTAINED BY CONTACTING SYCAMORE ENGINEERING, INC. DIRECTLY.© 2024

COMPLETED WETLAND MITIGATION

THE WETLAND IMPACTS SHOWN ON THIS PLAN HAVE BEEN PREVIOUSLY APPROVED BY SWFWMD, CITY OF TARPON SPRINGS AND ACOE AND HAS BEEN FULLY MITIGATED WITHIN THE ANCLOTE RIVER PARK, LOCATED AT DIXIE SITE IN CITY OF TARPON SPRINGS.

DEMOLITION NOTES

1. PRIOR TO DEMOLITION OCCURRING, ALL EROSION CONTROL DEVICES ARE TO BE INSTALLED.
2. CONTINUOUS ACCESS SHALL BE MAINTAINED FOR THE SURROUNDING PROPERTIES AT ALL TIMES DURING DEMOLITION OF THE EXISTING FACILITIES.
3. THE CONTRACTOR IS REQUIRED TO FAMILIARIZE HIMSELF WITH THE STRUCTURES TO BE DEMOLISHED. A BRIEF DESCRIPTION OF THE STRUCTURES IS INCLUDED IN THE SURVEY FOR THE CONTRACTOR'S CONVENIENCE ONLY.
4. PROVIDE ADEQUATE PROTECTION FOR PERSONS AND PROPERTY AT ALL TIMES. EXECUTE THE WORK IN A MANNER TO AVOID HAZARDS TO PERSONS AND PROPERTY AND PREVENT INTERFERENCE WITH THE USE OF AND ACCESS TO ADJACENT STREETS. STREETS AND SIDEWALKS SHALL NOT BE UNNECESSARILY BLOCKED BY DEBRIS AND EQUIPMENT.
5. IT IS THE CONTRACTOR'S SOLE RESPONSIBILITY TO DETERMINE THE EXTENT OF DEMOLITION REQUIRED IN ORDER TO PERFORM THE CONTRACT WORK FOR THIS PROJECT. THE CONTRACTOR SHALL CONDUCT SITE VISITS AND SHALL EXAMINE ALL OF THE INFORMATION WITHIN THESE DOCUMENTS: ALL DISCREPANCIES AND /OR OMISSIONS SHALL BE BROUGHT TO THE ATTENTION OF THE ENGINEER PRIOR TO BID SUBMITTAL.
6. THE LOCATIONS OF ALL EXISTING UTILITIES SHOWN ON THESE PLAN HAVE BEEN DETERMINED FROM THE BEST INFORMATION AVAILABLE AND ARE GIVEN FOR THE CONVENIENCE OF THE CONTRACTOR. THE ENGINEER ASSUMES NO RESPONSIBILITY FOR THEIR ACCURACY. PRIOR TO THE START OF ANY DEMOLITION ACTIVITY, THE CONTRACTOR SHALL NOTIFY THE UTILITY COMPANIES FOR ONSITE LOCATIONS OF EXISTING UTILITIES.
7. ALL EXISTING UTILITIES WITHIN THE R.O.W. SHALL BE ADJUSTED, REMOVED OR RELOCATED AT THE CONTRACTOR'S EXPENSE. ACTUAL WORK SHALL BE COORDINATED BY THE CONTRACTOR DIRECTLY WITH THE APPROPRIATE UTILITY COMPANY. ALL EXPENSES SHALL BE INCLUDED IN THE CONTRACTOR'S BID.
8. THE CONTRACTOR SHALL COORDINATE WITH RESPECTIVE UTILITY COMPANIES PRIOR TO THE REMOVAL AND/OR RELOCATION OF UTILITIES. THE CONTRACTOR SHALL COORDINATE WITH THE UTILITY COMPANY CONCERNING PORTIONS OF WORK WHICH MAY BE PERFORMED BY THE UTILITY COMPANY'S FORCES AND ANY FEES WHICH ARE TO BE PAID TO THE UTILITY COMPANY FOR THEIR SERVICES. THE CONTRACTOR IS RESPONSIBLE FOR PAYING ALL FEES AND CHARGES.
9. THE CONTRACTOR IS RESPONSIBLE FOR REMOVING ALL DEBRIS FROM THE SITE AND DISPOSING THE DEBRIS IN A LAWFUL MANNER. THE CONTRACTOR IS RESPONSIBLE FOR OBTAINING ALL PERMITS REQUIRED FOR DEMOLITION AND DISPOSAL.
10. THE CONTRACTOR IS RESPONSIBLE FOR THE DEMOLITION, REMOVAL, AND DISPOSAL, IN A LOCATION APPROVED BY ALL GOVERNING AUTHORITIES, OF ALL STRUCTURES, PADS, WALLS, FLUMES, FOUNDATIONS, PARKING, DRIVES, DRAINAGE, STRUCTURES, UTILITIES, ETC., SUCH THAT THE IMPROVEMENTS SHOWN ON THE REMAINING PLANS CAN BE CONSTRUCTED. ALL FACILITIES TO BE REMOVED SHALL BE UNDERCUT TO SUITABLE MATERIAL AND BROUGHT TO GRADE WITH SUITABLE COMPACTED FILL MATERIAL PER THE SPECIFICATIONS.
11. ALL EXISTING SEWERS, PIPING AND UTILITIES SHOWN ARE NOT TO BE INTERPRETED AS THE EXACT LOCATION, OR AS THE ONLY OBSTACLES THAT MAY OCCUR ON THE SITE. VERIFY EXISTING CONDITIONS AND PROCEED WITH CAUTION AROUND ANY ANTICIPATED FEATURES. GIVE NOTICE TO ALL UTILITY COMPANIES REGARDING DESTRUCTION AND REMOVAL OF ALL SERVICE LINES AND CAP ALL LINES BEFORE PROCEEDING WITH THE WORK.
12. ELECTRICAL, TELEPHONE, CABLE, WATER, FIBER OPTIC CABLE AND/OR GAS LINES NEEDING TO BE REMOVED OR RELOCATED SHALL BE COORDINATED WITH THE AFFECTED UTILITY COMPANY. ADEQUATE TIME SHALL BE PROVIDED FOR RELOCATION AND CLOSE COORDINATION WITH THE UTILITY COMPANY IS NECESSARY TO PROVIDE A SMOOTH TRANSITION IN UTILITY SERVICE. CONTRACTOR SHALL PAY CLOSE ATTENTION TO EXISTING UTILITIES WITHIN THE ANY ROAD RIGHT OF WAY DURING CONSTRUCTION.
13. CONTRACTOR MAY LIMIT SAW-CUT & PAVEMENT REMOVAL TO ONLY THOSE AREAS WHERE IT IS REQUIRED AS SHOWN ON THESE CONSTRUCTION PLANS BUT IF ANY DAMAGE IS INCURRED ON ANY OF THE SURROUNDING PAVEMENT, ETC. THE CONTRACTOR SHALL BE RESPONSIBLE FOR IT'S REMOVAL AND REPAIR.
14. PAVEMENT REMOVAL
    A. WHERE EXISTING PAVEMENT IS TO BE REMOVED, SAW-CUT THE SURFACING LEAVING A UNIFORM AND STRAIGHT EDGE WITH MINIMUM DISTURBANCE TO THE REMAINING ADJACENT SURFACING. IF CONSTRUCTION RESULTS IN RAVELING OF THE SAW-CUT SURFACE, RECUT BACK FROM THE RAVELED EDGE PRIOR TO RESTORATION. COORDINATE LIMITS OF SAW-CUT WITH SITE DIMENSION PLAN.

    B. WHERE EXISTING PAVEMENT, CURB, CURB AND GUTTER, SIDEWALK, DRIVEWAY, OR VALLEY GUTTER IS REMOVED FOR THE PURPOSE OF CONSTRUCTING OR REMOVING BOX CULVERTS, PIPE, INLETS, MANHOLES, APPURTENANCES, FACILITIES OR STRUCTURES, SAID PAVEMENT, ETC. SHALL BE REPLACED AND RESTORED IN EQUAL OR BETTER CONDITION THAN THE ORIGINAL. CONTRACTOR SHALL PROVIDE ALL NECESSARY LABOR, MATERIALS, EQUIPMENT, TOOLS, SUPPLIES, PAINT, AND EQUIPMENT REQUIRED.

    C. WHERE BASE MATERIAL IS TO BE RAISED, CONTRACTOR SHALL SCARIFY THE UPPER 4" MINIMUM OF THE EXISTING BASE MATERIAL, ADD THE NEW BASE TO REQUIRED THICKNESS AND RE-COMPACT SAID MATERIAL AS REQUIRED. BASE COURSE SHALL HAVE A MIN. LBR OF 100 AND SHALL BE COMPACTED TO 98% OF THE MODIFIED PROCTOR MAX. DRY DENSITY (ASTM D-1557) VALUE.
15. DAMAGE TO ALL EXISTING CONDITIONS TO REMAIN WILL BE REPLACED AT CONTRACTOR'S EXPENSE.
16. CONTRACTOR MUST STOP OPERATION AND NOTIFY THE DEVELOPER FOR PROPER DIRECTION IF ANY ENVIRONMENTAL OR HEALTH RELATED CONTAMINATE IS ENCOUNTERED DURING DEMOLITION/EXCAVATION PROCESS.
17. CONTRACTOR TO NOTIFY THE CONTROLLING AGENCY IN WRITING 10 DAYS BEFORE ANY DEMOLITION WORK.
18. SITE IS TO BE INSPECTED FOR GOPHER TORTOISE HABITATS PRIOR TO CONSTRUCTION. IF GOPHER TORTOISES OR ANY OTHER LISTED SPECIES OF SPECIAL CONCERN ARE PRESENT, THE PROPERTY DEVELOPER AND/OR THE DEVELOPER'S REPRESENTATIVE SHALL EXAMINE ALL VARIABLE OPTIONS BEFORE CONSTRUCTION BEGINS. THE FLORIDA FISH AND WILDLIFE CONSERVATION COMMISSION SHALL BE CONTACTED TO DISCUSS AVAILABLE OPTIONS. DUE TO THE SPECIES' PROTECTED STATUS, THE DESTRUCTION OF THEIR BURROWS CONSTITUTES TAKING UNDER THE LAW EXCEPT AS AUTHORIZED BY A SPECIFIC PERMIT.

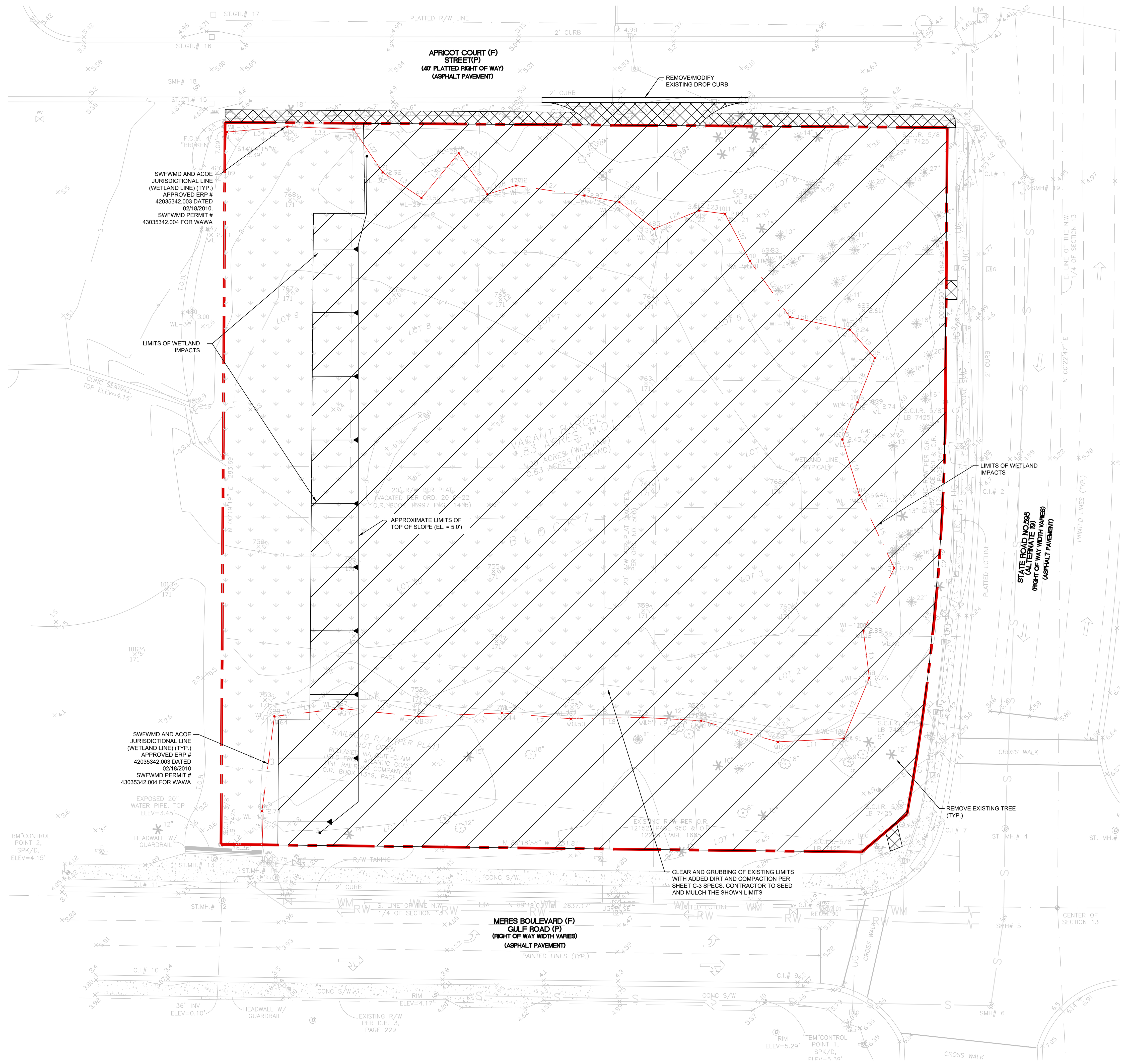

ATTENTION

1. CONTRACTOR TO VERIFY ALL EXISTING SANITARY AND WATER UTILITY LINES, WATER METERS, ETC. CONTRACTOR TO TRY TO FIND ANY CONFLICT IN EXISTENCE WITH PROPOSED DEVELOPMENT AND REPORT TO ENGINEER OF RECORD.
2. IT IS THE CONTRACTORS RESPONSIBILITY TO REMOVE ALL EXISTING UNDERGROUND AND ABOVE GROUND UTILITY LINES WITHIN THE SITE. CONTRACTOR TO TAKE ALL CAUTION TO REMOVE UNDERGROUND AND ABOVE GROUND LINES OF ANY TYPE, IF EXISTED.
3. EXISTING SURVEY AND THESE PLANS UTILIZED ABOVE GROUND DATA AND MOST AVAILABLE INFORMATION WITH NO KNOWLEDGE OF UNDERGROUND CONDITIONS AND EXISTING UTILITIES.
4. IT IS THE CONTRACTOR RESPONSIBILITY TO COORDINATE WITH ON-SITE GEOTECHNICAL CONSULTANT TO CHECK THE SOIL WITHIN PROPOSED RETENTION POND LOCATION, TO BE ACCEPTABLE SOIL FOR PERCOLATION AS PER AGENCIES REQUEST AND ALL ISSUED SITE PERMITS.
5. AT ANY TIME SHOULD LIME ROCK BE FOUND AT ANY DEPTH AND WITHIN WORK LIMITS, CONTRACTOR SHALL STOP WORK AND CONTACT THE ENGINEER OF RECORD AND SWFWMD.
6. SITE CONSTRUCTION WORK ON THIS SITE AND THESE CONSTRUCTION PLANS ARE DESIGNED BASED ON THE OWNER AND CONTRACTOR COMPLETING SOIL STABILIZATION AND REMOVAL OF ANY UNACCEPTABLE SOIL ACROSS THE WHOLE SITE TO ACHIEVE THE REQUIRED SETTLEMENT FOR THE SITE, POND & STRUCTURES (BUILDINGS, PAVEMENT, ETC...).

SITE AREAS

TOTAL SITE AREA: 1.83 ACRES
UPLAND AREA: 0.63 ACRES
WETLAND AREA: 1.20 ACRES
TOTAL IMPACT= 0.9785 AC
(*)WETLAND HAS BEEN PREVIOUSLY MITIGATED

LEGEND

PROPERTY LINE
JURISDICTIONAL LINE (WETLAND LINE)
= WETLAND AREA
= LIMITS OF AREA TO BE CLEARED/ LIMITS OF CONSTRUCTION
= PROPOSED WETLAND AREA TO BE IMPACTED
= LIMITS OF OFFSITE AREA TO BE CLEARED
= EXISTING FACILITY TO BE REMOVED

0 30 60
Scale: 1" = 30'

CONTRACTOR SHALL CONTACT SUNSHINE STATE ONE-CALL OF FLORIDA, INC. FOR LOCATION OF ALL UTILITIES TWO COMPLETE BUSINESS DAYS PRIOR TO BEGINNING CONSTRUCTION.
811 Know what's below. Call before you dig.

No.	Date	Revision - Description
1		
2		
3		
4		
5		
6		
7		

SYCAMORE ENGINEERING, INC.
• Civil Engineering
• Surveying & Mapping
• Land Planning
• Construction Management
• Landscape Architecture
8370 W. Hillsborough Ave., Suite 205
Tampa, FL 33615
Phone: 813.889.0700
Fax: 813.889.0788
e-mail: greatteam@sycamoreeng.com
F.L. C.A. # 9485 & L.B. # 7961

Project Title: THE SHOPPES AT MERES
Project Location: 1098 SOUTH PINELLAS AVENUE TARPON SPRINGS, FL 33689
Sheet Title: DEMOLITION PLAN

Digitally signed by Jihad D Sabbagh
Date: 2025.05.07 16:00:20 -04'00'
J.D. ALSABBAGH, P.E.
FL P.E. #58995

Job No.	J0308
Drawn by:	FHG
Approved by:	JDA
Date:	04-16-2024

Sheet No.
C-4

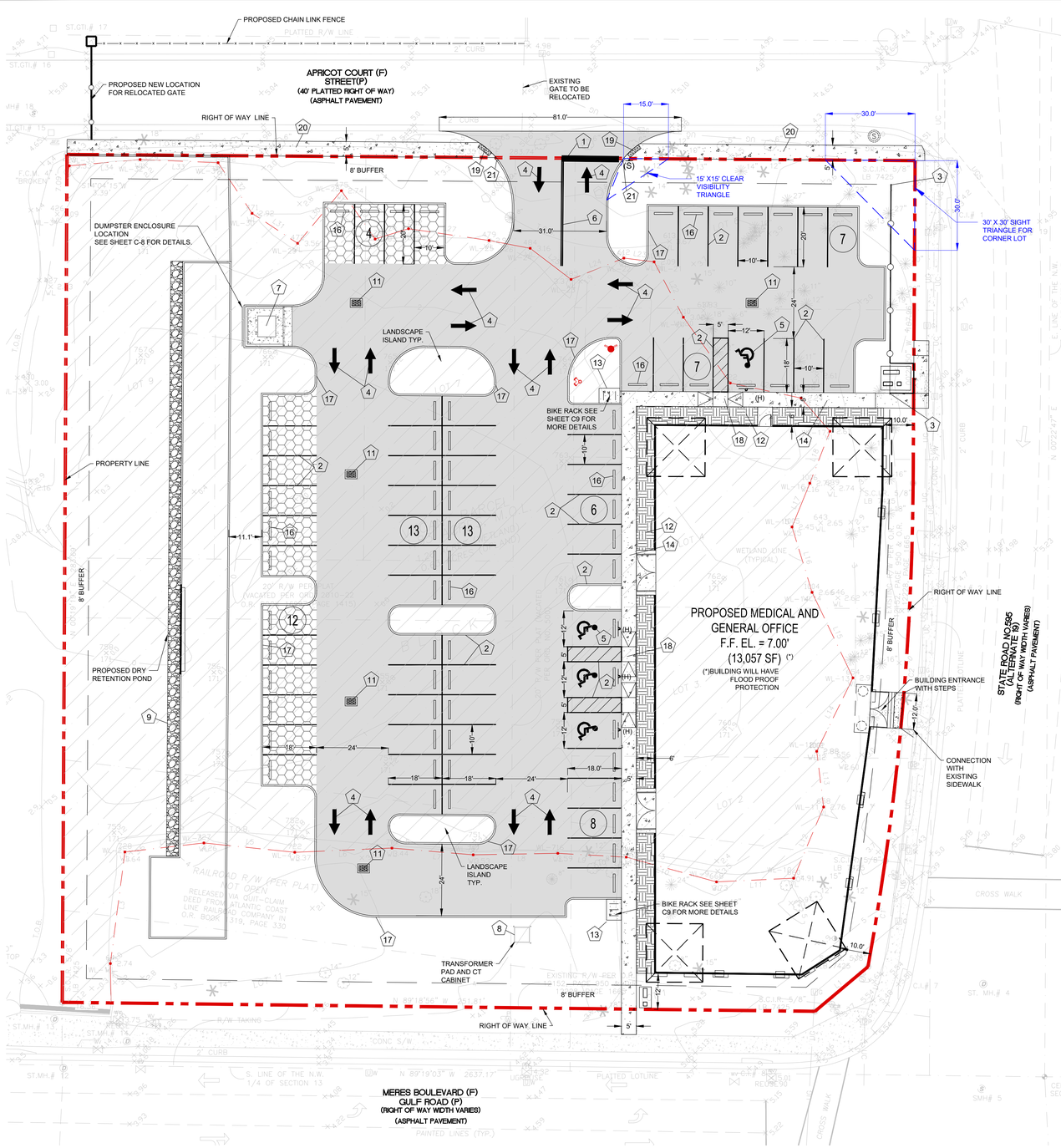

GENERAL NOTES

1. PROPOSED GLAZING AT ARCHITECTURAL ELEVATIONS FOR THE PROPOSED BUILDING AT OR ABOVE 70% REQUIREMENTS.
2. THERE ARE NO TYPICAL DAILY LOADING ON THE PROPOSED USE. MEDICAL AND GENERAL PROFESSIONAL OFFICE USES WITH CARRY IN PACKAGE IF NEEDED DELIVERY.
3. SITE TOTAL COST EXCEEDS $1,000,000.00. REQUIRED PUBLIC ARE PURSUANT TO SECTION 288.0(A)(Z) AND 296.00 WILL BE ADDRESSED AT TIME OF BUILDING PERMIT STAGE.
4. SITE LIGHTING PLAN WILL BE PROVIDE DURING BUILDING PLAN SUBMITTAL STAGE PER CITY OF TARPON SPRING CODE ADDRESSING SAFETY & SECURITY.
5. ALL BRAZILIAN PEPPER TREES (SCHINUS TEREBINTHIFOLIUS) SHALL BE REMOVED DURING THE SITE CONSTRUCTION PROCESS. A SITE INSPECTION WILL BE CONDUCTED TO ENSURE THAT ALL BRAZILIAN PEPPER TREES (SCHINUS TEREBINTHIFOLIUS) HAVE BEEN REMOVED. AFTER THE ISSUANCE OF THE CERTIFICATE OF OCCUPANCY, RE-GROWTH OF BRAZILIAN PEPPER TREES (SCHINUS TEREBINTHIFOLIUS) SHALL BE CONTROLLED IN PERPETUITY BY THE PROPERTY OWNER.
6. THE PROPOSED SIDEWALK ON APRICOT COURT WILL BE DESIGNED TO RETAIN VIABLE TREES WHERE POSSIBLE.
7. EXISTING RESIDENTIAL GATE LOCATED WITHIN APRICOT COURT RIGHT-OF-WAY TO BE RELOCATED FURTHER WEST TO THE END OF OUR NORTHERN PROPERTY LIMIT AS SHOWN ON THIS PLAN.

PROPOSED SITE LEGEND

1. 2' WIDE WHITE PAINT STOP BAR PER FDOT INDEX NO. 711-001.
2. 6" THICK PAINTED WHITE SOLID LINE (SSWL / 6") PER FDOT INDEX NO 711-001.
3. PROPOSED 3.5' HEIGHT SCREENING WALL TO MATCH BUILDING ARCHITECTURAL ELEVATIONS
4. DIRECTIONAL ARROWS WITHIN SITE SHALL BE WHITE PER FDOT INDEX NO 711-001.
5. HANDICAPPED PARKING SPACE PER DETAIL SHEET NO. C-9 AND HANDICAPPED ACCESSIBLE SYMBOL WITH WHITE PAINT ON PAVEMENT PER FDOT INDEX NO. 711-001 AND DETAIL ON SHEET C-9.
6. 4" WIDE DOUBLE YELLOW SOLID LINE (DYSL/4") PER FDOT INDEX NO 711-001.
7. HEAVY DUTY CONCRETE DUMPSTER PAD AND DUMPSTER SCREENING ENCLOSURE. SEE TRASH ENCLOSURE SHEET C-10 FOR DETAILS.
8. PROPOSED ELECTRICAL TRANSFORMER. LOCATION TO BE COORDINATED WITH ARCH. PLANS, THE OWNER REPRESENTATIVE AND ELECTRICAL COMPANY.
9. PROPOSED RIPRAP SEE SHEET C-9 FOR DETAILS.
10. EXISTING FIRE HYDRANT.
11. PROPOSED STORM INLET SEE SHEET C-6 FOR MORE DETAILS.
12. PROPOSED PERIMETER LANDSCAPE AREA.
13. 5'x6' CONCRETE SLAB WITH BIKE RACK (FOUR BIKE CAPACITY) SEE SHEET C-9 FOR DETAILS.
14. PROPOSED SIDEWALK ADJACENT TO THE BUILDING & FLUSH WITH PAVEMENT PER DETAIL ON SHEET C-9.
15. PROPOSED FIRE HYDRANT.
16. CONCRETE WHEEL STOP BAR PER FDOT INDEX 711-001. SEE DETAIL ON SHEET C-9.
17. TYPE "D" CONCRETE CURB.
18. H.C. RAMP CUT PER FDOT INDEX NO. 522-002 AND DETAIL ON SHEET C-7.
19. PROPOSED RAMP CUT AND TRUNCATED DOMES YELLOW (GLUED & ANCHORED TO THE HARDENED SURFACE) IN COLOR PER FDOT INDEX NO. 522-002 AND DETAIL ON SHEET C-9.
20. PROPOSED CONCRETE SIDEWALK WITH 2,000 PSI 6" THICK REINFORCED WITH EITHER #10 WELDED WIRE OR FIBER REINFORCED. A HANDICAP CUT TO MEET EXISTING PAVEMENT AND MEET BACK OF SIDEWALK WITHIN RIGHT OF WAY AS NEEDED. SEE SHEET C-8 FOR DETAIL.
21. TRIM EDGE OF CURB AT 45° DEGREE.

GENERAL NOTES FOR CONTRACTOR

THE DESIGN FOR PARKING LOT TRAFFIC CONTROL SIGNAGE SHALL BE AS SHOWN IN FIGURE 1 BELOW AND SHALL MEET THE FOLLOWING STANDARDS:

- SIGN POSTS SHALL BE BLACK OR DARK GREEN IN COLOR.
- SIGN POSTS SHALL BE ROUND OR FLUTED IN SHAPE.
- SIGN POSTS SHALL BE AT LEAST THREE INCHES IN DIAMETER.
- SIGN POSTS SHALL HAVE A ROUND OR FLUTED DECORATIVE BASE.
- SIGNS SHALL HAVE A BLACK OR DARK GREEN BOARDER OF AT LEAST ONE INCH IN WIDTH. SIGNS IDENTIFYING INDIVIDUAL PARKING SPACES ARE EXEMPT FROM THIS REQUIREMENT.

THE DESIGN FOR PARKING LOT LIGHTING SHALL BE SUBSTANTIALLY SIMILAR TO THOSE SHOWN IN FIGURE 2 BELOW OR SHALL MEET THE FOLLOWING DESIGN STANDARDS:

- LIGHT POSTS SHALL BE BLACK OR DARK GREEN IN COLOR.
- LIGHT POSTS SHALL BE EITHER ROUND OR FLUTED IN SHAPE.
- LIGHT POSTS SHALL HAVE A ROUND OR FLUTED DECORATIVE BASE.
- LIGHT FIXTURES SHALL BE DIRECTED DOWNWARD.

SITE CRITERIA CHECKLIST

PROJECT DATA	
Total Site Area	± 1.83 AC (79,557 SF)
FAR Allowable	1.0
FAR Proposed	0.16 (13,057/79,557=0.16)
Proposed Total Building Size	13057 SF (Medical & General Office)
Parking Spaces Required (*)	39
Parking Spaces Provided	70
Standard Size Of Parking Space	10' X 18' and 10' X 20'
Total Handicap Parking Required	4
Total Handicap Parking Provided	4
Total Proposed Impervious Area	± 1.19 AC
Impervious Surface Ratio Allowable	0.90 (90%) (72,270 SF)
Impervious Surface Ratio Proposed	0.65 (65%) (51,836 SF)
Open Space Allowable (Min.)	0.10 (10%) (7,287 SF)
Open Space Proposed	0.56 (30%) (24,021 SF)
Bike Spaces Provided	6 (5Required)
LAND INFORMATION	
Parcel Number	13-27-15-89946-007-0010
North Setback (Side)	89 FEET
South Setback (Side)	12 FEET
East Setback (Front)	10 FEET
West Setback (Rear)	197 FEET
ZONING INFORMATION	
Existing Zoning	GB General Business
Adjacent Zoning	Residential and Right-of-Ways
Building Height Allowable	35 Feet
Building Height Proposed	28 Feet
LANDSCAPE INFORMATION	
North Landscape	8 FEET
South Landscape	8 FEET
East Landscape	8 FEET
West Landscape	8 FEET

(*)3 Spaces /1,000SF = 13,057 SF x3 / 1,000 SF = 39 PARKING SPACES REQUIRED

Glazing % = 3,940 SF X 0.7 = 2,758 SF.
Architecture elevation Glazing Provided = 2,823 SF

WETLAND IMPACT ONSITE: 0.9785 ACRES

FACILITY IMPACT TABLE

WATER FLOW	1,960 GALLON DAILY
SANITARY SEWER FLOW	1,568 GALLON DAILY (*)
SOLID WASTE	3 TONS YEARLY
TRAFFIC TRIPS	472 DAILY

(*) AN 80% OF WATER DEMAND FLOW.

FLOOD PLAIN

SUBJECT PARCEL APPEARS TO LIE IN FLOOD ZONE AE, PER FLOOD INSURANCE RATE MAP COMMUNITY PANEL NO. 12103C 0019 H, DATED 8/24/2021, BASE FLOOD = 9'.

BUILDING FLOOD PROOF

OWNER/DEVELOPER SHALL FLOOD PROOF THE PROPOSED BUILDING TO AN ELEVATION OF 11.0' NAVD 88 PER FEMA REQUIREMENTS & RULES. OWNER WILL HAVE THIRD PARTY MONITORING SERVICE TO ACTIVATE & DO REQUIRED PROCEDURES FOR FLOOD PROTECTION BEFORE & DURING UPCOMING STORM EVENT. PROOF OF AGREEMENT SHOULD BE SUBMITTED TO BUILDING PART MEET DURING BUILDING PLAN REVISION. A DRY FLOOD PROOFING REQUIREMENT WILL BE ADDRESSED AT PERMIT APPLICATION SUBMITTAL REFERENCE FEMA P-936, DESIGN CONSIDERATIONS IN FLOOD PROOFING, 44 CFR, ASCE 24 AND FB C2023, 8TH EDISON. (EFF. 12/31/2023) FLOOD ZONE AE-9.

DATUM CONVERSION

ELEVATIONS DEPICTED HEREON BASED UPON N.G.V.D. 1929 DATUM. THE CONVERSION TO N.A.V.D. 1988 IS N.G.V.D. 1929 - 0.85'.

LEGEND

- PROPERTY LINE
- BUFFER LINE
- SCREEN WALL
- (H) HANDICAP SIGN
- (S) STOP SIGN (R1-1) 36"x36"
- (RTO) RIGHT TURN ONLY (FTP-53-06) 24"x36"
- (5) PATRON PARKING SPACES
- LIMITS OF NEW ASPHALT PAVEMENT
- LIMITS OF PERVIOUS PAVEMENT
- STORM INLET
- BUILDING PERIMETER LANDSCAPE BUFFER
- PROPOSED FIRE HYDRANT
- PROPOSED FDC FIRE HYDRANT

FIGURE-1

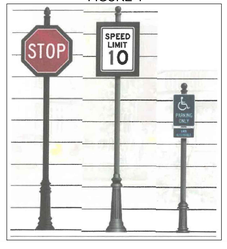

FIGURE-2

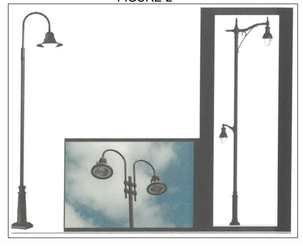

Scale: 1" = 20'

CONTRACTOR SHALL CONTACT SUNSHINE STATE ONE-CALL OF FLORIDA, INC. FOR LOCATION OF ALL UTILITIES TWO COMPLETE BUSINESS DAYS PRIOR TO BEGINNING CONSTRUCTION.
811 Know what's below. Call before you dig.

No.	Date	Revision - Description
1		
2		
3		
4		
5		
6		
7		

SYCAMORE ENGINEERING, INC.
• Civil Engineering
• Surveying & Mapping
• Land Planning
• Construction Management
• Landscape Architecture
8370 W. Hillsborough Ave., Suite 205
Tampa, FL 33615
Phone: 813.889.9700
Fax: 813.889.9788
email: geoff@sycamoreeng.com
FL. CA. # 9485 & LB. # 7961

Project Title: THE SHOPPES AT MERES
Project Location: 1098 SOUTH PINELLAS AVENUE TARPON SPRINGS, FL 33689
Sheet Title: SITE DIMENSION PLAN

Digitally signed by Jihad D Sabbagh
Date: 2025.05.07 16:00:36 -04'00'

J.D. ALSABBAGH, P.E.
FL P.E. #58995

Job No.	J0308
Drawn by:	FHG
Approved by:	JDA
Date:	04-16-2024

Sheet No.
C-5

THE DESIGN AND IDEAS INCORPORATED HEREIN, AS AN INSTRUMENT OF PROFESSIONAL SERVICE IS PROPERTY OF SYCAMORE ENGINEERING, INC. DIMENSIONS SHOULD NOT BE OBTAINED BY USING SCALING OF THE PLAN. DIMENSIONS CAN BE OBTAINED BY CONTACTING SYCAMORE ENGINEERING, INC. DIRECTLY. © 2024 IT CAN NOT BE USED OR COPIED FOR ANY OTHER PROJECT WITHOUT WRITTEN AUTHORIZATION FROM SYCAMORE ENGINEERING, INC.

FOR 25 MPH SPEED ROADWAY
L= TAPER LENGTH= 125' B= BUFFER WIDTH= 155' X= DISTANCE BETWEEN SIGNS= 200'

THE DESIGN AND IDEAS INCORPORATED HEREIN, AS AN INSTRUMENT OF PROFESSIONAL SERVICE IS PROPERTY OF SYCAMORE ENGINEERING, INC. DIMENSIONS SHOULD NOT BE OBTAINED BY USING SCALING OF THE PLAN. DIMENSIONS CAN BE OBTAINED BY CONTACTING SYCAMORE ENGINEERING, INC. DIRECTLY. © 2024
REPRODUCTION FROM SYCAMORE ENGINEERING, INC. DIMENSIONS SHOULD NOT BE OBTAINED BY USING SCALING OF THE PLAN. DIMENSIONS CAN BE OBTAINED BY CONTACTING SYCAMORE ENGINEERING, INC. DIRECTLY. © 2024
THE DESIGN AND IDEAS INCORPORATED HEREIN, AS AN INSTRUMENT OF PROFESSIONAL SERVICE IS PROPERTY OF SYCAMORE ENGINEERING, INC. IT CAN NOT BE USED OR COPIED FOR ANY OTHER PROJECT WITHOUT WRITTEN AUTHORIZATION FROM SYCAMORE ENGINEERING, INC.

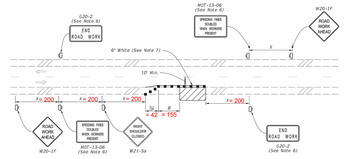

LAST REVISION	NO.	DESCRIPTION:	FDOT	FY 2021-22 STANDARD PLANS	TWO-LANE AND MULTILANE, WORK ON SHOULDER	INDEX	SHEET
11/01/20						102-602	1 of 2

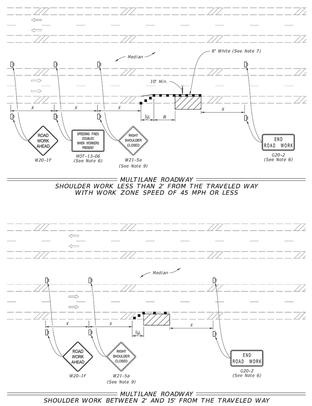

LAST REVISION	NO.	DESCRIPTION:	FDOT	FY 2021-22 STANDARD PLANS	TWO-LANE AND MULTILANE, WORK ON SHOULDER	INDEX	SHEET
11/01/20						102-602	2 of 2

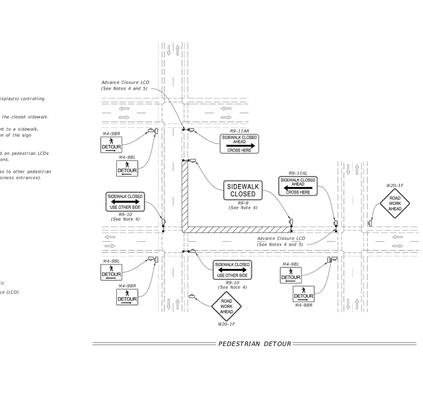

LAST REVISION	NO.	DESCRIPTION:	FDOT	FY 2021-22 STANDARD PLANS	SIDEWALK CLOSURE	INDEX	SHEET
11/01/20						102-660	1 of 2

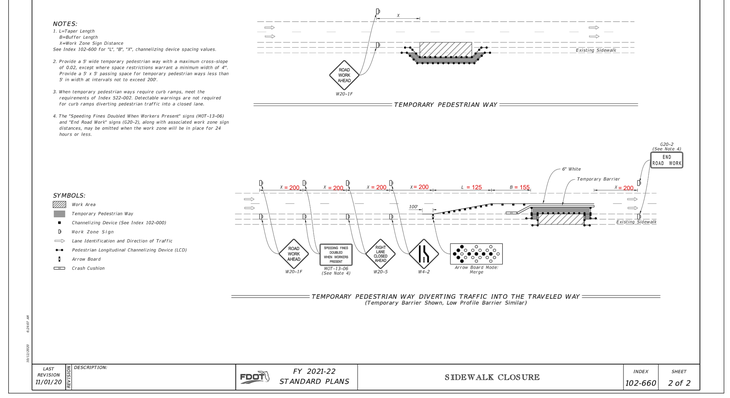

LAST REVISION	NO.	DESCRIPTION:	FDOT	FY 2021-22 STANDARD PLANS	SIDEWALK CLOSURE	INDEX	SHEET
11/01/20						102-660	2 of 2

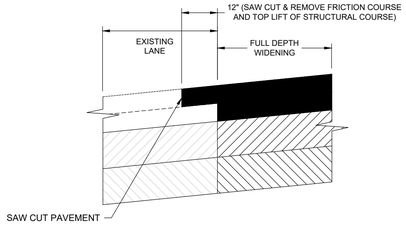

SAWCUT DETAIL
N.T.S.

FOR SANDS POINT DRIVE R/W USE:

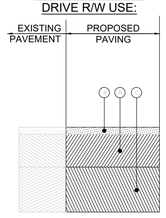

TYPICAL SECTION
SANDS POINT DR
(POSTED SPEED 25 MPH)
(DESIGN SPEED 25 MPH)
N.T.S.

LEGEND:
(A) 3" TYPE SP STRUCTURAL COURSE (TRAFFIC C)
(B) 10" OPTIONAL BASE GROUP 9 (LIMEROCK-LBR100)
(C) 12" TYPE B STABLIZATION (LBR 40)

ASPHALT LAYER	THICKNESS (in.)	STRUCTURAL NO. (SN)	SN
		-	-
A	3.0	0.44/in.	1.32
B	10	0.18/in.	1.80
C	12	0.08/in.	0.96
		SNtotal =	4.08

CONSTRUCTION NOTES

a) ALL PROPOSED RIGHT-OF-WAY WORK SHALL COMPLY WITH PINELLAS COUNTY STANDARD FOR ROADWAY CONSTRUCTION (LATEST EDITION), UNLESS OTHERWISE SPECIFIED IN PINELLAS COUNTY STANDARD DETAILS.

b) ALL RIGHT-OF-WAY INSTALLATIONS WILL BE IN ACCORDANCE WITH PRACTICES REFERENCED IN THE STATE OF FLORIDA UTILITIES ACCOMMODATIONS MANUAL.

c) ALL DESIGN AND CONSTRUCTION MUST CONFORM TO THE MINIMUM STANDARDS SET DOWN IN PINELLAS COUNTY LAND DEVELOPMENT, ZONING AND/OR RELATED ORDINANCES, AND MINIMUM TESTING FREQUENCY REQUIREMENTS.

d) SIGNS AND BARRICADES SHALL BE IN ACCORDANCE WITH THE US DEPARTMENT OF TRANSPORTATION'S "MANUAL ON UNIFORM TRAFFIC CONTROL DEVICES" AND THE FLORIDA DEPARTMENT OF TRANSPORTATION'S "STANDARD PLANS" INDEXES 102-600 THROUGH 102-670 (LATEST EDITIONS). ALL PROPOSED WORK SHALL COMPLY WITH FDOT STANDARD PLANS FOR ROADWAY CONSTRUCTION (LATEST EDITION), UNLESS OTHERWISE SPECIFIED IN PINELLAS COUNTY STANDARD DETAILS.

e) SAFE PEDESTRIAN TRAFFIC IS TO BE MAINTAINED AT ALL TIMES.

f) SIDEWALKS ARE TO BE RECONSTRUCTED WITHIN THREE (3) DAYS AFTER REMOVAL. WHEN EXISTING SIDEWALK IS REMOVED, IT IS TO BE REMOVED TO THE NEAREST JOINT.

g) PLACE EXPANSION JOINTS WHERE 4" AND 6" CONCRETE ABUT.

h) PLACE EXPANSION JOINT BETWEEN BACK-OF-CURB AND CONCRETE DRIVEWAY.

i) COMPACTION FOR PIPE BACKFILL SHALL COMPLY WITH AASHTO T-99 (100%).

j) DISTURBED AREA WITHIN THE RIGHT OF WAY WILL BE COMPACTED TO 100% OF MAXIMUM DENSITY AND SODDED.

k) PROVIDE A MINIMUM OF 3' COVER OVER UTILITIES AT ALL DITCH CROSSINGS.

l) THE PERMITTEE'S ATTENTION IS DIRECTED TO THE PROVISIONS OF THE TRENCH SAFETY ACT (FLORIDA STATUTES, SECTION 553.60 ET. SEQ.) AND THE OCCUPATIONAL SAFETY AND HEALTH ADMINISTRATION EXCAVATION SAFETY STANDARDS (29 C.F.R. SECTION 1926.650, SUBPART P) WHICH SHALL APPLY TO CONSTRUCTION, OPERATION AND MAINTENANCE PURSUANT TO THIS PERMIT

m) CONTRACTOR TO MAKE SURE TO SAW CUT THE EXISTING PAVEMENT PRIOR TO REMOVING ANY EXISTING CURB ON SANDS POINT DRIVE/ 13TH ST SE.

n) ANY DAMAGE TO EXISTING ASPHALT SHALL BE RESTORED PER PC INDEX 1291.



CONTRACTOR SHALL CONTACT SUNSHINE STATE ONE-CALL OF FLORIDA, INC. FOR LOCATION OF ALL UTILITIES TWO COMPLETE BUSINESS DAYS PRIOR TO BEGINNING CONSTRUCTION.
811
Know what's below. Call before you dig.

No.	Date	Revision - Description
1		
2		
3		
4		
5		
6		
7		

SYCAMORE ENGINEERING, INC.
• Civil Engineering
• Surveying & Mapping
• Land Planning
• Construction Management
• Landscape Architecture
8370 W. Hillsborough Ave., Suite 205
Tampa, FL 33615-3170
Phone: 813.889.0700
Fax: 813.889.0788
email: geoffrey@sycamoreeng.com
FL CA. # 9485 & LB. # 7961

Project Title: THE SHOPPES AT MERES
Project Location: 1098 SOUTH PINELLAS AVENUE TARPON SPRINGS, FL 33689
Sheet Title: MAINTENANCE OF TRAFFIC PLAN AND NOTES

ALSABBAGH ENGINEERING, INC. CERTIFICATE OF AUTHORIZATION NO. 58995
Digitally signed by Jihad D Sabbagh
Date: 2025.05.07 16:00:53 -04'00'
STATE OF FLORIDA PROFESSIONAL ENGINEER
J.D. ALSABBAGH, P.E.
FL P.E. #58995

Job No.	J0308
Drawn by:	FHG
Approved by:	JDA
Date:	04-16-2024

Sheet No.
C-5A

THE DESIGN AND IDEAS INCORPORATED HEREIN, AS AN INSTRUMENT OF PROFESSIONAL SERVICE IS PROPERTY OF SYCAMORE ENGINEERING, INC. DIMENSIONS SHOULD NOT BE OBTAINED BY USING SCALING OF THE PLAN. DIMENSIONS CAN BE OBTAINED BY CONTACTING SYCAMORE ENGINEERING, INC. DIRECTLY. © 2024
THIS PLAN IS NOT TO BE REPRODUCED, COPIED OR USED IN ANY WAY WITHOUT THE EXPRESS WRITTEN AUTHORIZATION FROM SYCAMORE ENGINEERING, INC. IT CAN NOT BE USED FOR ANY OTHER PROJECT WITHOUT WRITTEN AUTHORIZATION FROM SYCAMORE ENGINEERING, INC.

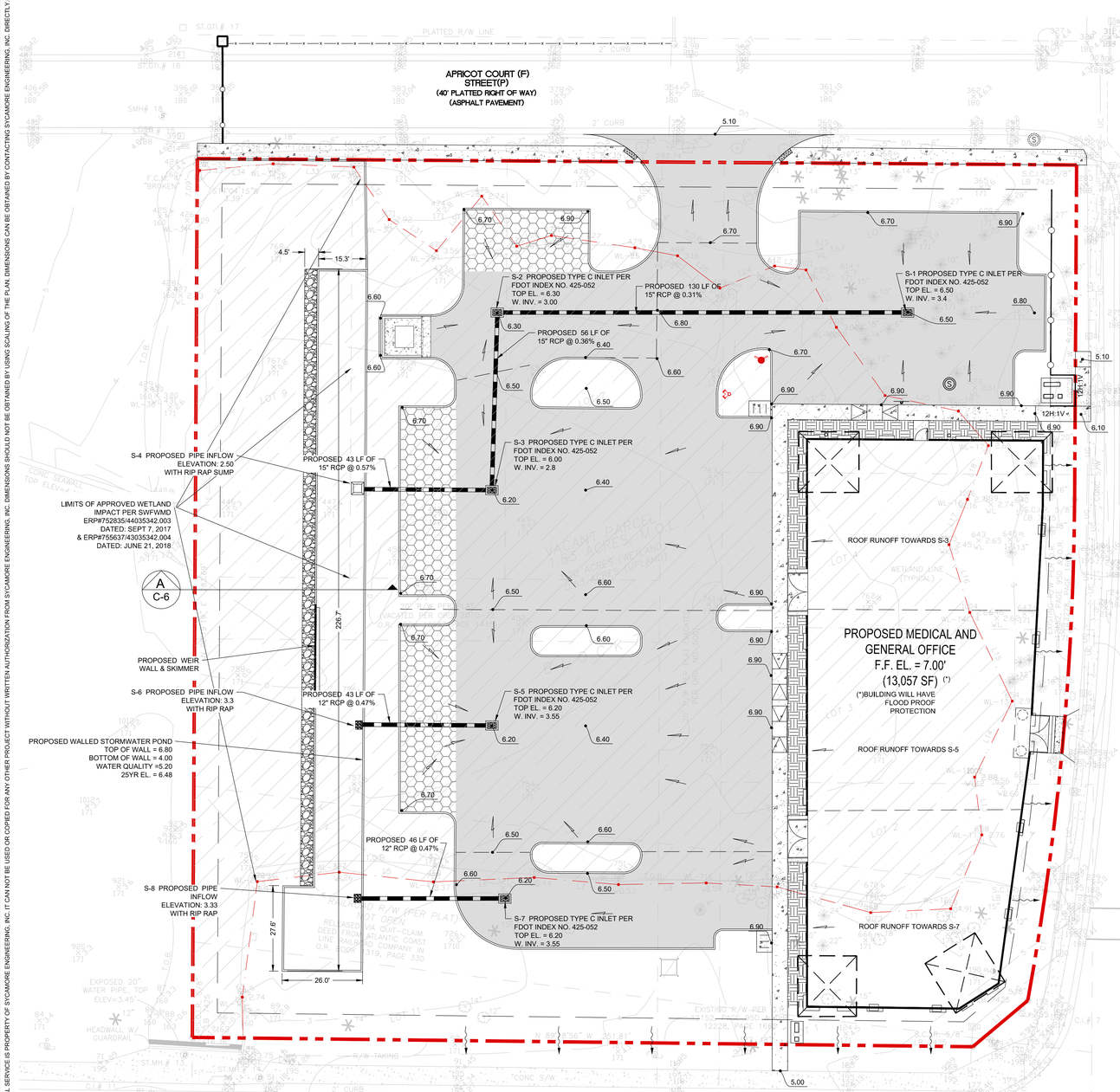

DATUM CONVERSION

ELEVATIONS DEPICTED HEREON BASED UPON N.G.V.D. 1929 DATUM.
THE CONVERSION TO N.A.V.D. 1988 IS N.G.V.D. 1929 - 0.85'.

POND NOTES

1. NO EXCAVATION SHALL EXTEND BELOW THE PERMITTED DESIGN DEPTHS/ELEVATIONS SHOWN ON THE DRAWINGS, UNLESS ADDITIONAL TESTING SUPPORTS OTHERWISE; AND NO LOWER SEMI-CONFINING UNIT CLAYEY SOIL MATERIAL AND/OR NO LIMESTONE MATERIALS SHALL BE EXCAVATED, REGARDLESS IF THESE MATERIALS ARE ENCOUNTERED WITHIN THE PERMITTED EXCAVATION DEPTHS/ELEVATIONS. IF ANY LOWER SEMI-CONFINING UNIT CLAYEY SOIL MATERIALS OR LIMESTONE MATERIALS ARE ENCOUNTERED ABOVE THE PERMITTED DEPTHS/ELEVATIONS, THEN EXCAVATION OPERATIONS SHALL CEASE IN THE GENERAL AREA. ENGINEER OF RECORD MUST BE CONTACTED PRIOR TO ANY EXCAVATION OF CLAYS. IN THE ABSENCE OF A CONFINING LAYER, 5 FEET OF UNDISTURBED SOIL MUST BE LEFT ABOVE THE LIMESTONE.
2. THE CONTRACTOR SHOULD LAY THE PROPOSED SOIL AT THE BOTTOM OF THE RETENTION POND UTILIZING MANUAL TOOLS WITHOUT ANY MACHINE FOR COMPACTION. THIS TO ENSURE NO COMPACTION OCCURRED TO FILL THE VOID
3. ALL DELETERIOUS MATERIALS SHALL BE REMOVED FROM BENEATH THE BOTTOM OF POND
4. ANY PROPOSED FILL PLACED WITHIN POND LIMITS SHALL BE CLEAN SAND, FREE OF DEBRIS, MUCK OR DELETERIOUS MATERIAL.
5. PERMEABILITY TEST MUST BE PERFORMED AND SUBMITTED TO CITY WITH MINIMUM REQUIRED PERMEABILITY TO BE 15 FT/DAY (SAFETY OF FACTOR INCLUDED), WITHIN POND LIMITS, AFTER CONSTRUCTION AND PRIOR TO BUILDING CERTIFICATE OF OCCUPANCY IS ISSUED, WHICH DEMONSTRATES ACTUAL PERCOLATION RATES IN THE POND IN PROVIDING TEST RESULTS WILL MEET OR EXCEED THE PERMEABILITY RATES USED IN THE CALCULATIONS.

NOTE

- ALL DISTURBED AREAS WITHIN PUBLIC RIGHT OF WAY MUST BE SODDED.
- THE PROPOSED BUILDING ROOF RUNOFF IS TO DRAIN TO THE INTERNAL SITE STORM SEWER SYSTEM AND NOT TO EXTERNAL ROADWAYS.
- PROPOSED BUILDING ROOF RUNOFF IS TO DRAIN TO THE INTERNAL SITE STORM SEWER SYSTEM (& NOT TO ROADWAYS).

PROPOSED GRADING LEGEND

- PROPERTY LINE
- WETLAND LINE
- HIGH POINT / TOE OF SLOPE
- LIGHT DUTY ASPHALT PAVEMENT
- CONCRETE SIDEWALK
- 5 — CONTOUR
- 5.77 — MEET EXISTING GRADE (±)
- 5.23 / 5.77 — TOP OF CURB / TOP OF PAVEMENT
- FLOW DIRECTION IN GRASS / SWALE
- FLOW DIRECTION IN IMPERVIOUS AREA

OPERATION AND MAINTENANCE OF STORMWATER SYSTEM

RETENTION PONDS
ALL SIDE SLOPES AND MAINTENANCE BERMS WILL BE PERIODICALLY MOWED AND CLEANED. DURING THE MOWING OPERATION, THE PONDS WILL BE INSPECTED FOR BARE SPOTS AND DAMAGE DUE TO EROSION. ANY BARE SPOTS GREATER THAN FIVE (5) SQUARE FOOT IN AREA WILL BE SODDED TO REPLACE GRASS COVER. IN CASE OF EROSION OR DAMAGE WHERE UNDERLYING SOIL IS MISSING, THE MISSING SOIL WILL BE REPLACED AND AREA BROUGHT BACK TO GRADE WITH SODDING AS REQUIRED.

PIPES AND INLETS:
PIPES AND INLETS WILL BE INSPECTED ANNUALLY FOR DAMAGE OR BLOCKAGE. ANY DAMAGED PIPES OR INLET WILL BE REPLACED OR REPAIRED. ANY TRASH, DEBRIS OR SAND DEPOSITS WILL BE REMOVED.

EROSION AND SEDIMENTATION CONTROL NOTES

MAINTENANCE OF EROSION CONTROL MEASURES IS OF PARAMOUNT IMPORTANCE TO THE OWNER(S). THE CONTRACTOR IS RESPONSIBLE FOR COMPLYING WITH ALL EROSION CONTROL MEASURES SHOWN ON THE PLANS. THE EROSION CONTROL SYSTEM DESCRIBED WITHIN THE CONSTRUCTION DOCUMENTS SHOULD BE CONSIDERED TO REPRESENT THE MINIMUM ACCEPTABLE STANDARDS FOR THIS PROJECT. ADDITIONAL EROSION CONTROLS MEASURES MAY BE REQUIRED DEPENDENT UPON THE STAGE OF CONSTRUCTION, THE SEVERITY OF THE RAINFALL EVENT AND/OR AS DEEMED NECESSARY AS A RESULT OF ON-SITE INSPECTIONS BY THE OWNER(S), THEIR REPRESENTATIVES OR THE JURISDICTIONAL AUTHORITIES. THESE ADDITIONAL MEASURES SHALL BE INSTALLED AT NO ADDITIONAL COST TO THE OWNER. IT IS THE CONTRACTOR'S ULTIMATE RESPONSIBILITY TO ASSURE THAT THE STORM WATER DISCHARGE FROM THE SITE DOES NOT EXCEED THE TOLERANCES ESTABLISHED BY ANY OF THE JURISDICTIONAL AUTHORITIES.

FLOOD PLAIN

SUBJECT PARCEL APPEARS TO LIE IN FLOOD ZONE AE, PER FLOOD INSURANCE RATE MAP COMMUNITY PANEL NO. 12103C 0019 H, DATED 8/24/2021, BASE FLOOD = 9'.

BUILDING FLOOD PROOF

OWNER/DEVELOPER SHALL FLOOD PROOF THE PROPOSED BUILDING TO AN ELEVATION OF 11.0' NAVD 88. OWNER WILL HAVE THIRD PARTY MONITORING SERVICE TO ACTIVATE & DO REQUIRED PROCEDURES FOR FLOOD PROTECTION BEFORE & DURING UPCOMING STORM EVENT. PROOF OF AGREEMENT SHOULD BE SUBMITTED TO BUILDING PART MEET DURING BUILDING PLAN REVISION.

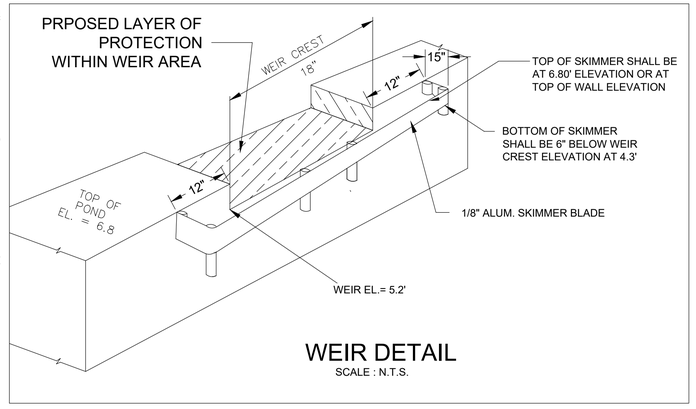

WEIR DETAIL

SCALE : N.T.S.

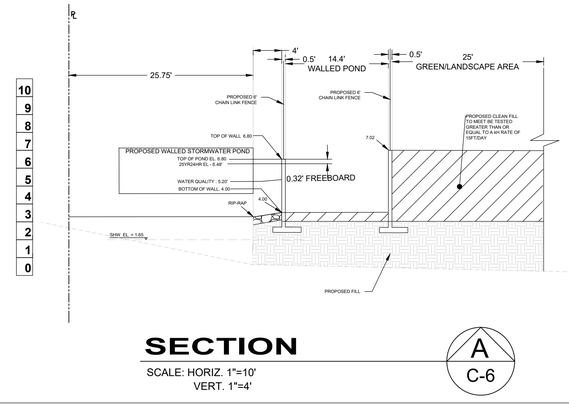

SECTION

SCALE: HORIZ. 1"=10'
VERT. 1"=4'

A
C-6

0 20 40
Scale: 1" = 20'

CONTRACTOR SHALL CONTACT SUNSHINE STATE ONE-CALL OF FLORIDA, INC. FOR LOCATION OF ALL UTILITIES TWO COMPLETE BUSINESS DAYS PRIOR TO BEGINNING CONSTRUCTION.
811
Know what's below. Call before you dig.

No.	Revision - Description	Date
1		
2		
3		
4		
5		
6		
7		

SYCAMORE ENGINEERING, INC.
• Civil Engineering
• Water Resource Mapping
• Land Planning
• Construction Management
• Landscape Architecture
8370 W. Hillsborough Ave., Suite 205
Tampa, FL 33615
Phone: 813.889.0700
Fax: 813.889.0768
email: greatteam@sycamoreeng.com
FL. C.A. # 9485 & LB. # 7961

Project Title: THE SHOPPES AT MERES
Project Location: 1098 SOUTH PINELLAS AVENUE TARPON SPRINGS, FL 33689
Sheet Title: PAVING, GRADING AND DRAINAGE PLAN

J. D. ALSABAGH P.E. LICENSE NO. 58995 STATE OF FLORIDA PROFESSIONAL ENGINEER
Digitally signed by Jihad D Sabbagh
Date: 2025.05.07 16:01:41 -04'00'
J.D. ALSABAGH, P.E.
FL P.E. #58995

Job No.	J0308
Drawn by:	FHG
Approved by:	JDA
Date:	04-16-2024

Sheet No.
C-6

THE DESIGN AND IDEAS INCORPORATED HEREIN, AS AN INSTRUMENT OF PROFESSIONAL SERVICE IS PROPERTY OF SYCAMORE ENGINEERING, INC. DIMENSIONS SHOULD NOT BE OBTAINED BY USING SCALING OF THE PLAN. DIMENSIONS CAN BE OBTAINED BY CONTACTING SYCAMORE ENGINEERING, INC. DIRECTLY. © 2024
THIS PLAN, AS AN INSTRUMENT OF SERVICE, IS PROPERTY OF SYCAMORE ENGINEERING, INC. IT CAN NOT BE USED OR COPIED FOR ANY OTHER PROJECT WITHOUT WRITTEN AUTHORIZATION FROM SYCAMORE ENGINEERING, INC.

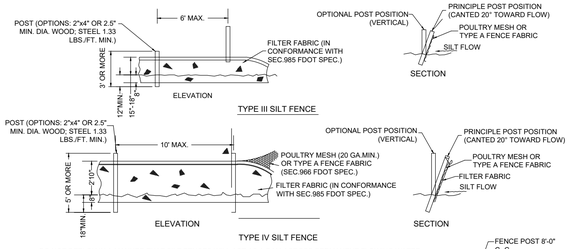

DO NOT DEPLOY IN A MANNER THAT SILT FENCES WILL ACT AS A DAM ACROSS PERMANENT FLOWING WATER COURSES. SILT FENCES ARE TO BE USED AT UPLAND LOCATIONS AND TURBIDITY BARRIERS USED AT PERMANENT BODIES OF WATER.

NOTES:

- UNLESS SPECIFIED, HAY BARRIERS MAY BE USED IN LIEU OF SILT FENCES.
- ADDITIONAL POSTS AND RAILS MAY BE NECESSARY TO SECURE AND SUPPORT BARRIERS.
- ADDITIONAL FENCE LENGTHS MAY BE REQUIRED BY THE COUNTY ENGINEER OR BY REGULATORY AGENCIES.

NOTE: BOTTOM 1 FT. OF FABRIC EMBEDDED IN 6" TRENCH TAMPED IN PLACE.

TO BE PLACED ADJACENT TO WETLANDS BOUNDARY OR OPEN WATERS NOT PROTECTED BY DIKE.

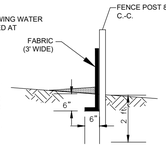

EROSION CONTROL DETAIL

NPDES NOTIFICATION:

ATTENTION: THE EROSION/SEDIMENTATION LOCATIONS AND DETAILS SET FORTH IN THIS SITE PLAN HAVE BEEN DEVISED BY THE PROJECT ENGINEER TO MEET THE REQUIREMENTS OF THE FEDERAL NATIONAL POLLUTANT DISCHARGE ELIMINATION SYSTEM (NPDES) PROGRAM. FAILURE TO MAINTAIN THESE CONTROLS, OR AN ILLICIT DISCHARGE RESULTING FROM THEIR FAILURE WILL LIKELY RESULT IN FINE CITATIONS. SEC. 58-239 OF THE PINELLAS COUNTY CODE AUTHORIZES PENALTIES OF UP TO $10,000.00 FOR EACH OFFENSE.

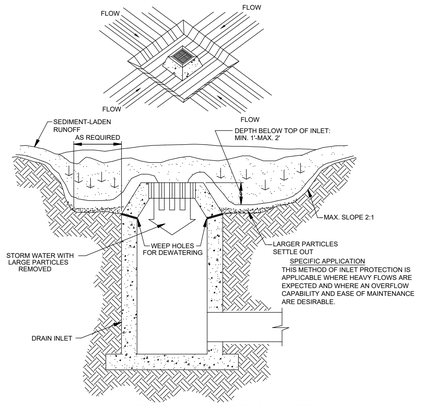

EXCAVATED INLET SEDIMENT TRAP

N.T.S.

STABILIZED CONSTRUCTION ENTRANCE

1. STONE SIZE - USE 2" STONE, OR RECLAIMED OR RECYCLED CONCRETE EQUIVALENT
2. LENGTH - AS REQUIRED, BUT NOT LESS THAN 50 FEET
3. THICKNESS - NOT LESS THAN SIX (6) INCHES
4. WIDTH - TWELVE (12) FOOT MINIMUM, BUT NOT LESS THAN THE FULL WIDTH AT POINTS WHERE INGRESS OR EGRESS OCCURS
5. FILTER CLOTH - WILL BE PLACED OVER THE ENTIRE AREA PRIOR TO PLACING OF STONE
6. SURFACE WATER - ALL SURFACE WATER FLOWING OR DIVERTED TOWARD CONSTRUCTION ENTRANCES SHALL BE PIPED ACROSS THE ENTRANCE. IF PIPING IS IMPRACTICAL, A MOUNTABLE BERM WITH 5:1 SLOPES WILL BE PERMITTED.
7. MAINTENANCE - THE ENTRANCE SHALL BE MAINTAINED IN A CONDITION WHICH WILL PREVENT TRACK OR FLOWING OF SEDIMENT ONTO PUBLIC RIGHTS-OF-WAY. THIS MAY REQUIRE PERIODIC TOP DRESSING WITH ADDITIONAL STONE AS CONDITIONS DEMAND AND REPAIR AND/OR CLEANOUT ANY MEASURES USED TO TRAP SEDIMENT. ALL SEDIMENT SPILLED, DROPPED, WASHED, OR TRACKED ONTO PUBLIC RIGHTS-OF-WAY MUST BE REMOVED IMMEDIATELY.
8. WASHING - WHELLS SHALL BE CLEANED TO REMOVE SEDIMENT PRIOR TO ENTRANCE ONTO PUBLIC RIGHTS-OF-WAY. WHEN WASHING IS REQUIRED, IT SHALL BE DONE ON AN AREA STABILIZED WITH STONE AND WHICH DRAINS INTO AN APPROVED SEDIMENT TRAPPING DEVICE.
9. PERIODIC INSPECTION AND NEEDED MAINTENANCE SHALL BE PROVIDED AFTER EACH RAIN.

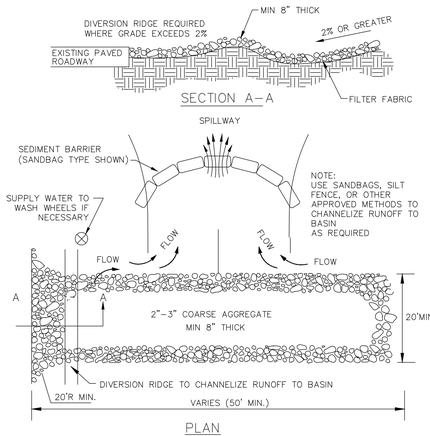

TEMPORARY CONSTRUCTION ACCESS DETAIL

N.T.S.

NOTE:

1. THE ENTRANCE SHALL BE MAINTAINED IN A CONDITION THAT WILL PREVENT TRACKING OR FLOWING OF SEDIMENT ONTO PUBLIC RIGHTS-OF-WAY. THIS MAY REQUIRE TOP DRESSING REPAIR AND/OR CLEANOUT OF ANY MEASURES USED TO TRAP SEDIMENT.
2. WHEN NECESSARY, WHEELS SHALL BE CLEANED PRIOR TO ENTRANCE ONTO PUBLIC RIGHT-OF-WAY.
3. WHEN WASHING IS REQUIRED, IT SHALL BE DONE ON AN AREA STABILIZED WITH CRUSHED STONE THAT DRAINS INTO AN APPROVED SEDIMENT TRAP OR SEDIMENT BASIN.

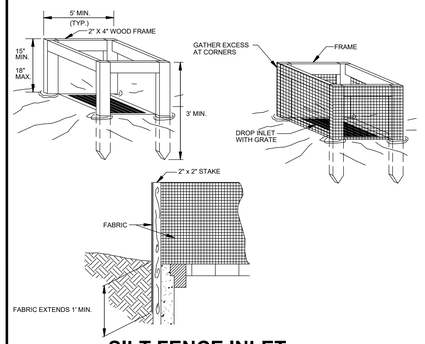

SILT FENCE INLET PROTECTION

N.T.S.

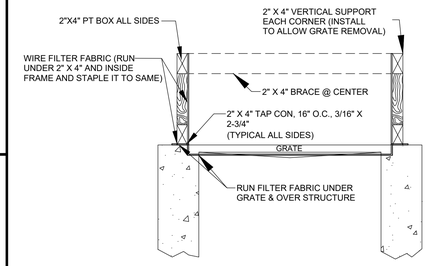

NOTES:

1. FASTEN FRAMING TO STRUCTURE TO ALLOW GRATE REMOVAL.
2. LEAVE EXPOSED EDGE TO ALLOW FOR PAVING TO GRADE.

INLET PROTECTION DETAIL

1. PLACE CURB TYPE SEDIMENT BARRIERS ON GENTLY SLOPING STREET SEGMENTS WHERE WATER CAN POND AND ALLOW SEDIMENT TO SEPARATE FROM RUNOFF
2. SANDBAGS OF EITHER BURLAP OR WOVEN GEOTEXTILE FABRIC, ARE FILLED WITH GRAVEL, LAYERED AND PACKED TIGHTLY
3. LEAVE ONE SANDBAG GAP IN THE TOP ROW TO PROVIDE A SPILLWAY FOR OVERFLOW
4. INSPECT BARRIERS AND REMOVE SEDIMENT AS NECESSARY. SEDIMENT AND GRAVEL MUST BE REMOVED FROM THE TRAVELED WAY IMMEDIATELY

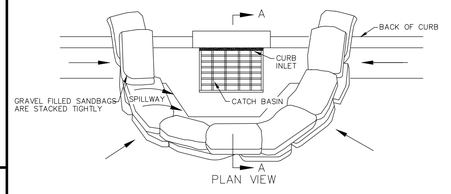

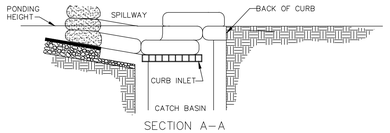

CURB INLET PROTECTION DETAIL

NOTE TO CONTRACTOR: TREE BARRICADES & EROSION CONTROL MEASURES

- CONSTRUCTION, ENCROACHMENT INTO OR FAILURE TO MAINTAIN THESE BARRICADES WILL RESULT IN ENFORCEMENT ACTION WHICH MAY INCLUDE CITATIONS AND/OR PERMIT REVOCATION AS PROVIDED BY CHAPTER 166 OF THE PINELLAS COUNTY LAND DEVELOPMENT CODE.

- PLEASE INCLUDE THE FOLLOWING NOTE ON THE LANDSCAPE PLAN TO ENSURE THAT PLANTER AREAS CONTAIN MATERIAL SUITABLE FOR THE PLANT GROWTH:

- SOILS WITHIN PLANTER BEDS MUST BE SUITABLE FOR PROPOSED PLANTED MATERIAL IN REGARDS TO PH, SOIL TEXTURE, SOIL STRUCTURE, AND SEASONAL HIGH WATER TABLE. ANY DELETERIOUS MATERIAL SUCH AS LIMEROCK, ASPHALT, CONCRETE OR OTHER OBSTRUCTIONS WILL BE REMOVED FROM THE FULL EXTENT OF THE PLANTER AREA.

- THERE MUST BE NO EQUIPMENT OR CONSTRUCTION MATERIALS ON SITE UNTIL HML PERMIT IS IN HAND.

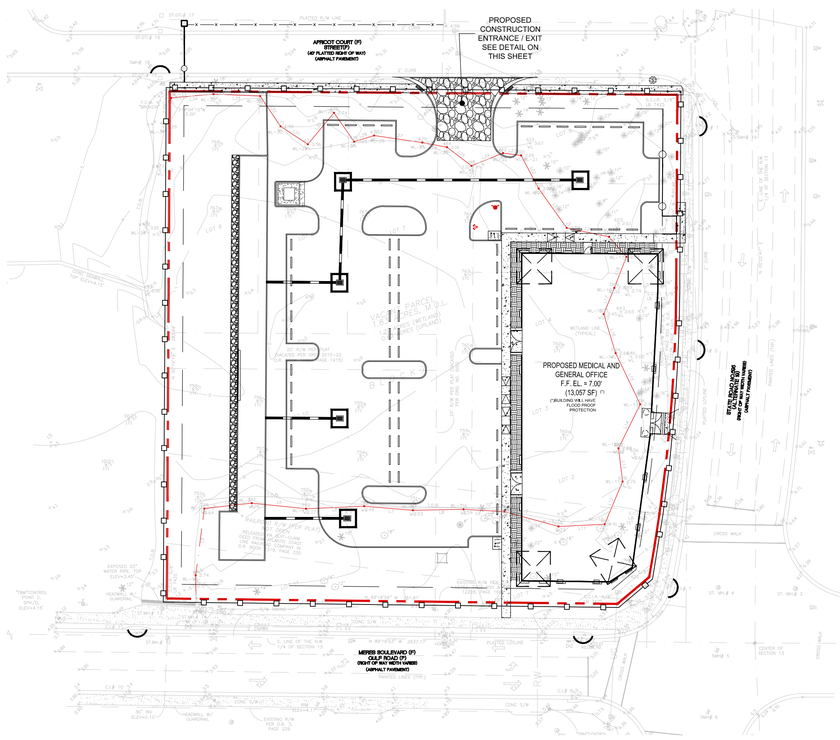

PROPOSED LEGEND

- PROPERTY LINE
- LANDSCAPE BUFFER LINE
- LIMITS OF CONSTRUCITON
- PROPOSED SILT FENCE/LIMITS OF CONSTRUCTION
- PROPOSED STORM SEWER PIPE
- PROPOSED INLET PROTECTION AROUND STORM DRAINAGE STRUCTURES
- PROPOSED MES PROTECTION AROUND STORM DRAINAGE STRUCTURES
- TEMPORARY CONSTRUCTION ACCESS

FLOOD PLAIN

SUBJECT PARCEL APPEARS TO LIE IN FLOOD ZONE AE, PER FLOOD INSURANCE RATE MAP COMMUNITY PANEL NO. 12103C 0019 H, DATED 8/24/2021, BASE FLOOD = 9'.

0 40 80
Scale: 1" = 40'

CONTRACTOR SHALL CONTACT SUNSHINE STATE ONE-CALL OF FLORIDA, INC. FOR LOCATION OF ALL UTILITIES TWO COMPLETE BUSINESS DAYS PRIOR TO BEGINNING CONSTRUCTION.

811 Know what's below. Call before you dig.

No.	Date	Revision - Description
1		
2		
3		
4		
5		
6		
7		

SYCAMORE ENGINEERING, INC.
• Civil Engineering
• Surveying & Mapping
• Land Planning
• Construction Management
• Landscape Architecture
8370 W. Hillsborough Ave., Suite 205
Tampa, FL 33615
Phone: 813.889.0700
Fax: 813.889.0768
email: greatideas@sycamoreeng.com
FL. C.A. # 9485 & LB. # 7961

Project Title: THE SHOPPES AT MERES
Project Location: 1098 SOUTH PINELLAS AVENUE TARPON SPRINGS, FL 33689
Sheet Title: EROSION CONTROL PLAN

J. D. ALSABAGH LICENSED PROFESSIONAL ENGINEER NO. 58995 STATE OF FLORIDA
Digitally signed by Jihad D Sabbagh
Date: 2025.05.07 16:21:34 -04'00'
J.D. ALSABAGH, P.E.
FL P.E. #58995

Job No.	J0308
Drawn by:	FHG
Approved by:	JDA
Date:	04-16-2024

Sheet No.
C-6A

THE DESIGN AND IDEAS INCORPORATED HEREIN, AS AN INSTRUMENT OF PROFESSIONAL SERVICE IS PROPERTY OF SYCAMORE ENGINEERING, INC. IT CAN NOT BE USED OR COPIED FOR ANY OTHER PROJECT WITHOUT WRITTEN AUTHORIZATION FROM SYCAMORE ENGINEERING, INC. DIMENSIONS SHOULD NOT BE OBTAINED BY USING SCALING OF THE PLAN. DIMENSIONS CAN BE OBTAINED BY CONTACTING SYCAMORE ENGINEERING, INC. DIRECTLY. © 2024

BEST MANAGEMENT PRACTICES

RETENTION BASIN CONSTRUCTION PROCEDURES:

RETENTION BASIN CONSTRUCTION PROCEDURES AND THE OVERALL SEQUENCE OF SITE CONSTRUCTION ARE TWO KEY FACTORS THAT CAN CONTROL THE EFFECTIVENESS OF RETENTION BASINS. THE APPLICANT MUST DEMONSTRATE THAT THE DESIGN INFILTRATION RATE WILL BE MET AFTER CONSTRUCTION BY MINIMIZING SOIL COMPACTION DURING CONSTRUCTION AND MINIMIZING THE AMOUNT OF SEDIMENT DEPOSITED INTO THE RETENTION BASIN.

BECAUSE STORMWATER MANAGEMENT SYSTEMS ARE REQUIRED TO BE CONSTRUCTED DURING THE INITIAL PHASES OF SITE DEVELOPMENT, RETENTION BASINS ARE OFTEN EXPOSED TO POOR QUALITY SURFACE RUNOFF. STORMWATER RUNOFF DURING CONSTRUCTION CONTAINS CONSIDERABLE AMOUNTS OF SUSPENDED SOLIDS, ORGANICS, CLAYS, SILTS, TRASH AND OTHER UNDESIRABLE MATERIALS. FOR EXAMPLE, THE SUBGRADE STABILIZATION MATERIAL USED DURING THE CONSTRUCTION OF ROADWAYS AND PAVEMENT AREAS TYPICALLY CONSISTS OF CLAYEY SAND OR SOIL CEMENT. IF A STORM OCCURS WHEN THESE MATERIALS ARE EXPOSED (PRIOR TO PLACEMENT OF THE ROADWAY WEARING SURFACE), CONSIDERABLE AMOUNTS OF THESE MATERIALS END UP IN THE STORMWATER CONVEYANCE SYSTEM AND THE RETENTION BASIN, HINDERING INFILTRATION THROUGH THE SYSTEM. ANOTHER SOURCE OF FINE MATERIAL GENERATED DURING CONSTRUCTION IS DISTURBED SURFACE SOIL THAT CAN RELEASE LARGE QUANTITIES OF ORGANICS AND OTHER FINE PARTICLES. FINE PARTICLES OF CLAY, SILT, AND ORGANICS AT THE BOTTOM OF A RETENTION BASIN ALSO CREATE A POOR INFILTRATING SURFACE.

THE FOLLOWING CONSTRUCTION PROCEDURES ARE REQUIRED TO AVOID DEGRADATION OF RETENTION BASIN INFILTRATION CAPACITY DUE TO CONSTRUCTION PRACTICES:

(a) THE LOCATION AND DIMENSIONS OF THE RETENTION BASIN WILL BE VERIFIED ONSITE PRIOR TO ITS CONSTRUCTION. ALL DESIGN REQUIREMENTS INCLUDING RETENTION BASIN DIMENSIONS AND DISTANCES TO FOUNDATIONS, SEPTIC SYSTEMS, WELLS, ETC., NEED TO BE VERIFIED.

(b) THE LOCATION OF RETENTION BASINS WILL BE CLEARLY MARKED AT THE SITE TO PREVENT UNNECESSARY VEHICULAR TRAFFIC ACROSS THE AREA CAUSING SOIL COMPACTION.

(c) INITIALLY CONSTRUCT THE RETENTION BASIN BY EXCAVATING THE BASIN BOTTOM AND SIDES TO APPROXIMATELY 12 INCHES ABOVE FINAL DESIGN GRADES.

(d) EXCAVATION WILL BE DONE BY LIGHTWEIGHT EQUIPMENT TO MINIMIZE SOIL COMPACTION. TRACKED, CLEATED EQUIPMENT DOES LESS SOIL COMPACTION THAN EQUIPMENT WITH TIRES.

(e) AFTER THE WATERSHED AREA CONTRIBUTING TO THE BASIN HAS BEEN FULLY STABILIZED, THE INTERIOR SIDE SLOPES AND BASIN BOTTOM WILL BE EXCAVATED TO FINAL DESIGN SPECIFICATIONS. THE EXCESS SOIL AND UNDESIRABLE MATERIALMUST BE CAREFULLY EXCAVATED AND REMOVED FROM THE BASIN SO THAT ALL ACCUMULATED SILTS, CLAYS, ORGANICS,AND OTHER FINE SEDIMENT MATERIAL HAS BEEN REMOVED FROM THE POND AREA. THE EXCAVATED MATERIAL WILL BE DISPOSED OF IN A MANNER THAT ASSURES IT WILL NOT RE-ENTER THE RETENTION BASIN.

(f) ONCE THE BASIN HAS BEEN EXCAVATED TO FINAL GRADE, THE ENTIRE BASIN BOTTOM MUST BE DEEP RAKED AND LOOSENED FOR OPTIMAL INFILTRATION. THE DEPTH TO BE RAKED IS DEPENDENT ON THE TYPE, WEIGHT AND CONTACT PRESSURE OF THE CONSTRUCTION EQUIPMENT USED DURING THE BULK EXCAVATION OF THE BASIN.

AN APPLICANT MAY PROPOSE ALTERNATIVE CONSTRUCTION PROCEDURES TO ASSURE THAT THE DESIGN INFILTRATION RATE OF THE CONSTRUCTED AND STABILIZED RETENTION BASIN IS MET.

RETENTION BASIN INSPECTION, OPERATION & MAINTENANCE:

MAINTENANCE ISSUES ASSOCIATED WITH RETENTION BASINS ARE RELATED TO CLOGGING OF THE POROUS SOILS, WHICH REDUCES OR PREVENTS INFILTRATION THEREBY SLOWING RECOVERY OF THE STORMWATER TREATMENT VOLUME AND OFTEN RESULTING IN STANDING WATER. SEDIMENTATION CAN CAUSE CLOGGING AND RESULTING SEALING OF THE BOTTOM OR SIDE SLOPE SOILS. IT CAN ALSO OCCUR FROM EXCESSIVE LOADING OF OILS AND GREASES OR FROM EXCESSIVE ALGAL OR MICROORGANISM GROWTH. STANDING WATER WITHIN A RETENTION BASIN CAN ALSO RESULT FROM AN ELEVATED HIGH WATER TABLE OR FROM GROUND WATER MOUNDING, BOTH OF WHICH CAN PRESENT LONG-TERM OPERATIONAL ISSUES THAT MAY

REQUIRE REDESIGN OF THE SYSTEM.

TO DETERMINE IF AN INFILTRATION SYSTEM IS PROPERLY FUNCTIONING OR WHETHER IT NEEDS MAINTENANCE REQUIRES THAT AN INSPECTION BE DONE WITHIN 72 HOURS AFTER A STORM. THE INSPECTION SHOULD DETERMINE IF THE RETENTION BASIN IS RECOVERING ITS STORAGE VOLUME WITHIN ITS PERMITTED TIME FRAMES, GENERALLY 24 TO 72 HOURS AFTER A STORM. IF THIS IS NOT OCCURRING AND THERE IS STANDING WATER, THEN THE CAUSE MUST BE DETERMINED, AND ACTIONS UNDERTAKEN BEGINNING WITH THOSE SPECIFIED IN THE SYSTEM'S OPERATION AND MAINTENANCE PLAN.

(a) INSPECTION ITEMS:

(1)INSPECT BASIN FOR STORAGE VOLUME RECOVERY WITHIN THE PERMITTED TIME, GENERALLY LESS THAN 72 HOURS. FAILURE TO PERCOLATE THE REQUIRED TREATMENT VOLUMES INDICATES REDUCTION OF THE INFILTRATION RATE AND A NEED TO RESTORE SYSTEM PERMEABILITY.

(2)INSPECT AND MONITOR SEDIMENT ACCUMULATION ON THE BASIN BOTTOM OR INFLOW TO PREVENT CLOGGING OF THE RETENTION BASIN OR THE INFLOW PIPES.

(3)INSPECT VEGETATION OF BOTTOM AND SIDE SLOPES TO ASSURE IT IS HEALTHY, MAINTAINING COVERAGE, AND THAT NO EROSION IS OCCURRING WITHIN THE RETENTION BASIN.

(4)INSPECT INFLOW AND OUTFLOW STRUCTURES, TRASH RACKS, AND OTHER SYSTEM COMPONENTS FOR ACCUMULATION OF DEBRIS AND TRASH THAT WOULD CAUSE CLOGGING AND ADVERSELY IMPACT OPERATION OF THE RETENTION BASIN.

(5)INSPECT THE RETENTION BASIN FOR POTENTIAL MOSQUITO BREEDING AREAS SUCH AS WHERE STANDING WATER OCCURS AFTER 72 HOURS OR WHERE CATTAILS, OTHER INVASIVE OR NUISANCE VEGETATION BECOMES ESTABLISHED.

(b) MAINTENANCE ACTIVITIES AS-NEEDED TO PROLONG SERVICE:

(1)IF NEEDED, RESTORE THE INFILTRATION CAPACITY OF THE RETENTION BASIN SO THAT IT MEETS THE PERMITTED RECOVERY TIME FOR THE REQUIRED TREATMENT VOLUME.

(2)REMOVE ACCUMULATED SEDIMENT FROM RETENTION BASIN BOTTOM AND INFLOW AND OUTFLOW PIPES AND DISPOSE OF PROPERLY. PLEASE NOTE THAT STORMWATER SEDIMENT DISPOSAL MAY BE REGULATED UNDER CHAPTER 62-701, F.A.C. (SEDIMENT REMOVAL SHOULD BE DONE WHEN THE SYSTEM IS DRY AND WHEN THE SEDIMENTS ARE CRACKING).

(3)REMOVE TRASH AND DEBRIS INFLOW AND OUTFLOW STRUCTURES, TRASH RACKS, AND OTHER SYSTEM COMPONENTS TO PREVENT CLOGGING OR IMPEDING FLOW.

(4)MAINTAIN HEALTHY VEGETATIVE COVER TO PREVENT EROSION IN THE BASIN BOTTOM, SIDE SLOPES OR AROUND INFLOW AND OUTFLOW STRUCTURES. VEGETATION ROOTS ALSO HELP TO MAINTAIN SOIL PERMEABILITY. GRASS NEEDS TO BE MOWED AND GRASS CLIPPINGS REMOVED FROM THE BASIN TO REDUCE INTERNAL NUTRIENT LOADINGS.

(5)ELIMINATE MOSQUITO BREEDING HABITATS.

(6)ASSURE THAT THE CONTRIBUTING WATERSHED AREA IS STABILIZED AND NOT A SOURCE OF SEDIMENTS.

SEDIMENT AND EROSION CONTROL MEASURES NOTES

THE FOLLOWING CONSTRUCTION PROCEDURES ARE REQUIRED TO AVOID DEGRADATION OF THE SWALE'S INFILTRATION CAPACITY DUE TO CONSTRUCTION PRACTICES:

(a) THE LOCATION AND DIMENSIONS OF THE SWALE SYSTEM WILL BE VERIFIED ONSITE PRIOR TO ITS CONSTRUCTION. ALL DESIGN REQUIREMENTS INCLUDING SWALE DIMENSIONS AND DISTANCES TO FOUNDATIONS, SEPTIC SYSTEMS, AND WELLS NEED TO BE VERIFIED.

(b) THE LOCATION OF SWALES WILL BE CLEARLY MARKED AT THE SITE TO PREVENT UNNECESSARY VEHICULAR TRAFFIC ACROSS THE AREA CAUSING SOIL COMPACTION.

(c) EXCAVATION WILL BE DONE BY LIGHTWEIGHT EQUIPMENT TO MINIMIZE SOIL COMPACTION. TRACKED, CLEATED EQUIPMENT CAUSES LESS SOIL COMPACTION THAN EQUIPMENT WITH TIRES.

(d) ENSURE THAT LATERAL AND LONGITUDINAL SLOPES MEET PERMITTED DESIGN REQUIREMENTS AND WILL NOT ERODE DUE TO CHANNELIZED FLOW OR EXCESSIVE FLOW RATES.

(e) FINAL GRADING AND PLANTING OF THE SWALE SHOULD NOT OCCUR UNTIL THE ADJOINING AREAS DRAINING INTO THE SWALE ARE STABILIZED. ANY ACCUMULATION OF SEDIMENTS THAT DOES OCCUR MUST BE REMOVED DURING THE FINAL STAGES OF GRADING. THE BOTTOM SHOULD BE TILLED TO PRODUCE A HIGHLY POROUS SURFACE.

(f) ENSURE THAT MEASURES ARE IN PLACE TO DIVERT RUNOFF WHILE VEGETATION IS BEING ESTABLISHED ON THE SIDE SLOPES AND BOTTOM OF THE SWALE. IF RUNOFF CAN'T BE DIVERTED, VEGETATION WILL BE ESTABLISHED BY STAKED SODDING OR BY THE USE OF EROSION CONTROL BLANKETS (WITH NO PLASTIC MONOFILAMENT) OR OTHER APPROPRIATE METHODS.

(g) ENSURE THAT THE VEGETATION USED IN THE SWALE IS CONSISTENT WITH VALUES USED FOR MANNING'S "N" IN THE DESIGN CALCULATIONS.

(h) AN APPLICANT MAY PROPOSE ALTERNATIVE CONSTRUCTION PROCEDURES TO ASSURE THAT THE DESIGN INFILTRATION RATE OF THE CONSTRUCTED AND STABILIZED SWALE SYSTEM BASIN IS MET PROVIDED IT IS ACCEPTABLE AND APPROVED BY THE COUNTY.

INSPECTIONS, OPERATIONS AND MAINTENANCE REQUIREMENTS

MAINTENANCE ISSUES ASSOCIATED WITH SWALES ARE RELATED TO CLOGGING OF THE POROUS SOILS WHICH REDUCES OR PREVENTS INFILTRATION THEREBY SLOWING RECOVERY OF THE STORMWATER TREATMENT VOLUME AND OFTEN RESULTING IN STANDING WATER. CLOGGING CAN RESULT FROM EROSION AND SEDIMENTATION AND THE RESULTING SEALING OF THE BOTTOM OR SIDE SLOPE SOILS. IT CAN ALSO OCCUR FROM EXCESSIVE LOADING OF OILS AND GREASES OR FROM EXCESSIVE ALGAL OR MICROORGANISM GROWTH.

TO DETERMINE IF A SWALE IS PROPERLY FUNCTIONING OR WHETHER IT NEEDS MAINTENANCE REQUIRES THAT AN INSPECTION BE DONE DURING AND SOON AFTER A STORM. THE INSPECTION SHOULD DETERMINE IF THE SWALE IS RECOVERING ITS STORAGE VOLUME WITHIN ITS PERMITTED TIME FRAMES, GENERALLY 24 TO 72 HOURS AFTER A STORM. IF THIS IS NOT OCCURRING AND RESULTS IN STANDING WATER, THEN THE CAUSE OF CLOGGING MUST BE DETERMINED AND APPROPRIATE ACTIONS UNDERTAKEN BEGINNING WITH THOSE SPECIFIED IN THE SYSTEM'S OPERATION AND MAINTENANCE PLAN.

(a) INSPECTION ITEMS:

(1)INSPECT SWALE FOR STORAGE VOLUME RECOVERY WITHIN THE PERMITTED TIME, GENERALLY LESS THAN 72 HOURS. FAILURE TO PERCOLATE THE REQUIRED TREATMENT VOLUMES INDICATES REDUCTION OF THE INFILTRATION RATE AND A NEED TO RESTORE SYSTEM PERMEABILITY

(2)INSPECT AND MONITOR SEDIMENT ACCUMULATION ON THE BOTTOM OF THE SWALE OR AT INFLOWS TO PREVENT CLOGGING OF THE SWALE OR THE INFLOW PIPES.

(3)INSPECT VEGETATION OF BOTTOM AND SIDE SLOPES TO ASSURE IT IS HEALTHY, MAINTAINING COVERAGE, AND THAT NO EROSION IS OCCURRING WITHIN THE SWALE.

(4)INSPECT THE SWALE FOR POTENTIAL MOSQUITO BREEDING AREAS SUCH AS WHERE STANDING WATER OCCURS AFTER 72 HOURS OR WHERE CATTAILS OR OTHER INVASIVE VEGETATION BECOMES ESTABLISHED.

(5)INSPECT SWALE TO DETERMINE IF FILLING, EXCAVATION, CONSTRUCTION OF FENCES, OR OTHER OBJECTS ARE OBSTRUCTING THE SURFACE WATER FLOW IN THE SWALES.(6)INSPECT THE SWALE TO DETERMINE IF IT HAS BEEN DAMAGED, WHETHER BY NATURAL OR HUMAN ACTIVITIES.

(A) MAINTENANCE ACTIVITIES AS-NEEDED TO PROLONG SERVICE:

(1)IF NEEDED, RESTORE INFILTRATION CAPABILITY OF THE SWALE TO ASSURE IT MEETS PERMITTED REQUIREMENTS.

(2)REMOVE ACCUMULATED SEDIMENT FROM SWALE AND INFLOW OR OUTFLOWS AND DISPOSE OF PROPERLY. PLEASE NOTE THAT STORMWATER SEDIMENT DISPOSAL MAY BE REGULATED UNDER CHAPTER 62-701, F.A.C. SEDIMENT REMOVAL SHOULD BE DONE WHEN THE SWALE IS DRY AND WHEN THE SEDIMENTS ARE CRACKING.

(3)REMOVE TRASH AND DEBRIS, ESPECIALLY FROM INFLOW OR OUTFLOW STRUCTURES, TO PREVENT CLOGGING OR IMPEDING FLOW.

(4)MAINTAIN HEALTHY VEGETATIVE COVER TO PREVENT EROSION OF THE SWALE BOTTOM OR SIDE SLOPES. MOW GRASS AS NEEDED AND REMOVE GRASS CLIPPINGS TO REDUCE NUTRIENT LOADINGS.

(5)ELIMINATE MOSQUITO BREEDING HABITATS.

(6)REMOVE FENCES OR OTHER OBSTRUCTIONS THAT MAY HAVE BEEN BUILT IN THE SWALE SYSTEM.

(7)REPAIR ANY DAMAGES TO THE SWALE SYSTEM SO THAT IT MEETS PERMITTED REQUIREMENTS.

SITE NOTES:

TOTAL PROJECT AREA : 1.62 ACRES
SITE LOCATION : SECTION 29, TOWNSHIP 32, RANGE 16
LOCATION : SEE THE TITLE SHEET OR COVER SHEET
DRAINAGE PATTERNS: SEE SHEET C-6 FOR FLOWLINE
SLOPES: 0.80% - 1.9% SLOPE ACROSS SITE, SEE SHEET C-6 FOR PROPOSED SPOT ELEVATIONS
AREA DISTURBED/AREAS NOT DISTURBED: 1.62 AC
LOCATION AND DETAILS OF BMPS: SEE THIS SHEET AND C-6B FOR MORE DETAILS
LOCATION OF WETLANDS AND SURFACE WATERS: SEE SHEETS C-5, C-6.
LOCATION OF OUTFALL TO SURFACE WATER: EAST TO THE PROPERTY
BMP DETAIL DRAWINGS: SEE THIS SHEET AND C-6B FOR MORE DETAILS
DESCRIPTION OF CONSTRUCTION ACTIVITIES: CLEARING, GRUBBING, AND COMPACTION (FEBUARY 2022 TO FEBUARY-2023)
CONSTRUCTION SEQUENCE: EARTHWORK, FOUNDATION AND SLAB, UTILITIES SYSTEM, STORMWATER SYSTEM AND PAVING
SOIL TYPES: MATLACHA AND ST.AUGUSTINE SOILS AND URBAN LAND
DEWATERING METHODS AND LOCATIONS: N/A
BMPS: SEE THIS SHEET FOR MORE DETAILS
PERMANENT STABILIZATION: CONCRETE
PERMANENT STORMWATER MANAGEMENT CONTROL: SILT FENCE AND INLET PROTECTION
POTENTIAL POLLUTANTS DURING CONSTRUCTION: NOT APPLICABLE
INSPECTIONS: CONSTRUCTION SITE WILL BE INSPECTED FOR EROSION PROBLEMS DAILY AND AFTER EACH RAINFALL GREATER THAN 0.5 INCHES. A RAIN GAUGE WILL BE ON SITE TO MEASURE THE RAINFALL AMOUNT

EROSION & POLLUTION CONTROL NOTES

1. PROTECTION AND STABILIZATION OF ON-SITE SOIL STOCKPILES: FILL MATERIAL STOCKPILES SHALL BE PROTECTED AT ALL TIMES BY ON-SITE DRAINAGE CONTROLS WHICH PREVENT EROSION OF THE STOCKPILED MATERIAL. CONTROL OF DUST FROM SUCH STOCKPILES IS TO BE REQUIRED, DEPENDING UPON THEIR LOCATION AND THE EXPECTED LENGTH OF TIME THE STOCKPILES WILL BE PRESENT. IN NO CASE SHALL ANY STOCKPILED MATERIAL REMAIN AFTER THIRTY (30) CALENDAR DAYS UPON COMPLETION OF CONSTRUCTION.
2. PROTECTION OF EXISTING STORM SEWER SYSTEMS WATER INLETS IN THE VICINITY OF THE PROJECT SHALL BE PROTECTED BY SEDIMENT TRAPS SUCH AS SECURED HAY BALES, SOD, STONE, ETC. WHICH SHALL BE MAINTAINED AND MODIFIED AS REQUIRED BY CONSTRUCTION PROGRESS, AND WHICH MUST BE APPROVED BY THE ENGINEER BEFORE INSTALLATION. THIS WILL BE MAINTAINED TO PREVENT DEGRADATION OF THE WATERS OF THE COUNTY & STATE.
3. EROSION/SEDIMENTATION CONTROL: CONTRACTOR IS TO PROVIDE EROSION CONTROL/SEDIMENTATION BARRIER (HAY BALES OR SILTATION CURTAIN) TO PREVENT SILTATION OF ADJACENT PROPERTY, STREETS, STORM SEWERS AND WATERWAYS. IN ADDITION, CONTRACTOR SHALL PLACE STRAW, MULCH OR OTHER SUITABLE MATERIAL BE PLACED ON GROUND IN AREAS WHERE CONSTRUCTION RELATED TRAFFIC IS TO ENTER AND EXIT SITE. EITHER BY NATURAL DRAINAGE OR BY VEHICULAR TRAFFIC, THE CONTRACTOR IS TO REMOVE AND CLEAN SAID EARTH TO THE SATISFACTION OF THE ENGINEER AND/OR AUTHORITIES.
4. IF WIND EROSION BECOMES SIGNIFICANT DURING CONSTRUCTION, THE CONTRACTOR SHALL STABILIZE THE AFFECTED AREA USING SPRINKLING, IRRIGATION OR OTHER ACCEPTABLE METHODS.

EROSION AND SEDIMENTATION CONTROL NOTES

MAINTENANCE OF EROSION CONTROL MEASURES IS OF PARAMOUNT IMPORTANCE TO OWNER(S). THE CONTRACTOR IS RESPONSIBLE FOR COMPLYING WITH ALL EROSION CONTROL MEASURES SHOWN ON THE PLANS. THE EROSION CONTROL SYSTEM DESCRIBED WITHIN THE CONSTRUCTION DOCUMENTS SHOULD BE CONSIDERED TO REPRESENT THE MINIMUM ACCEPTABLE STANDARDS FOR THIS PROJECT. ADDITIONAL EROSION CONTROLS MEASURES MAY BE REQUIRED DEPENDENT UPON THE STAGE OF CONSTRUCTION, THE SEVERITY OF THE RAINFALL EVENT AND/OR AS DEEMED NECESSARY AS A RESULT OF ON-SITE INSPECTIONS BY THE OWNER, THEIR REPRESENTATIVES OR THE JURISDICTIONAL AUTHORITIES. THESE ADDITIONAL MEASURES SHALL BE INSTALLED AT NO ADDITIONAL COST TO THE OWNER. IT IS THE CONTRACTOR'S ULTIMATE RESPONSIBILITY TO ASSURE THAT THE STORM WATER DISCHARGE FROM THE SITE DOES NOT EXCEED THE TOLERANCES ESTABLISHED BY ANY OF THE JURISDICTIONAL AUTHORITIES.

1. SITE DESCRIPTION

A. CONSTRUCTION ACTIVITY/PROJECT LIMITS:
PROPOSE ANTIQUE CAR GALLERY AND EVENT SPACE AT 1301 PINELLAS BAYWAY, TIERRA VERDE, FL 33715

B. SEQUENCE OF MAJOR ACTIVITY AND IMPLEMENTATION:
1. INSTALL EROSION AND POLLUTION CONTROL MEASURES.
2. CLEAR, GRUB & EXCAVATE RETENTION AREA.
3. GRADE SITE, INCLUDING EXCAVATING & FILLING.
4. STABILIZE TOP SOIL WITH SOD/SEED & MULCH ACCORDINGLY.

C. ESTIMATE OF TOTAL PROJECT AREA AND AREA TO BE DISTURBED:
1. THE PROJECT AREA IS 6.62 ACRES.

D. ESTIMATE OF RUNOFF COEFFICIENTS AND EXISTING SOIL DATA:
1. THE ESTIMATED RUNOFF COEFFICIENT PRIOR TO CONSTRUCTION: C = 0.67
2. THE ESTIMATED RUNOFF COEFFICIENT AFTER CONSTRUCTION: C = 0.74 TO UNDERGROUND SYSTEM, C = 0.20 FROM UNDERGROUND SYSTEM.
3. THE ESTIMATED RUNOFF COEFFICIENT DURING CONSTRUCTION: C = 0.1 TO 0.5
4. THE EXISTING SOILS ARE LISTED AS MATLACHA AND ST.AUGUSTINE SOILS AND URBAN LAND PER THE USDA SOIL CONSERVATION SERVICE SOIL SURVEY OF PINELLAS COUNTY.

E. SITE MAP:
SEE COVER SHEET OF CONSTRUCTION PLANS.

F. RECEIVING WATERS/WETLAND AREAS:
1. THE SITE WILL DISCHARGE TO THE EXISTING TIDAL WATERS LOCATED EAST OF THE SITE.

2. CONTROLS

A. EROSION AND SEDIMENT CONTROL:
DURING THE CONSTRUCTION OPERATIONS, THE FOLLOWING CONTROL MEASURES WILL BE USED TO PREVENT EROSION AND SEDIMENTATION:
1. CLEARING & GRUBBING WILL BE PERFORMED TO MINIMIZE THE IMPACTS TO THE UNPROTECTED AREAS EXPOSED TO EROSION FORCES. CONSTRUCTION IS LIMITED TO AREAS OF CLEARING.
2. EXCAVATED MATERIALS WILL DEPOSITED IN A MANOR TO AVOID WASHOUT FROM STORMWATER RUNOFF. ALL STOCK PILES WILL BE PROTECTED BY SEDIMENT CONTAINMENT DEVICES.
3. ALL DRAINAGE STRUCTURES WILL BE PROTECTED DURING CONSTRUCTION. SEE THE EROSION CONTROL AND GRADING SPECIFICATIONS LISTED ON THE APPROVED CONSTRUCTION PLANS FOR THIS PROJECT.

B. STORMWATER MANAGEMENT:
THE STORMWATER SYSTEM WILL BE HANDLED THROUGH A DRY RETENTION AREA.

C. OTHER CONTROLS:
THE CONTRACTOR, AT ALL TIMES, WILL:
1. DISPOSE OF WASTE BY APPROPRIATE MEANS.
2. LIMIT OFF-SITE TRACKING AND SPILLAGE.
3. DISPOSE OF SANITARY WASTE BY APPROPRIATE MEANS.
4. HIRE ONLY CERTIFIED TECHNICIANS TO HANDLE OR DISPENSE FERTILIZERS AND PESTICIDES.
5. STOP WORK WHEN ENCOUNTERING A SPILL, WILL NOT RESUME UNTIL DIRECTED BY THE PROJECT ENGINEER AND HAVE THE DISPOSITION OF THE HAZARDOUS WASTE BE MADE IN ACCORDANCE WITH ALL REGULATING AGENCIES.

D. APPROVED STATE AND LOCAL PLANS OR PERMITS:
1. THE CONTRACTOR IS TO ADHERE TO THE FOLLOWING STORMWATER PERMITS THAT WILL BE ISSUED FOR THIS PROJECT:
1. SOUTHWEST FLORIDA WATER MANAGEMENT DISTRICT
2. PINELLAS COUNTY
2. MAINTENANCE
THE CONTRACTOR SHALL BE RESPONSIBLE FOR IMPLEMENTING AND MAINTAINING ALL POLLUTION AND EROSION CONTROL DEVICES ON A DAILY MANOR. A REPORT WILL BE TAKEN TO RECORD ANY DEVIATIONS FROM PERMIT COMPLIANCE.
3. INSPECTION
THE CONTRACTOR SHALL INSPECT ALL POLLUTION AND EROSION CONTROL DEVICES WEEKLY AND WITHIN 24 HOURS AFTER A RAINSTORM IN EXCESS OF 0.50 INCHES. THE CONTRACTOR SHALL REPORT ALL FINDINGS AND LIST THE CORRECTIVE
ACTIONS TAKEN TO CORRECT THE DEFICIENCIES. THESE REPORTS WILL BE SUBMITTED TO THE ENGINEER FOR REVIEW.
4. REFERENCES
THE CONSTRUCTION PLANS WITH SPECIFICATIONS FOR THIS PROJECT ARE HEREBY REFERENCED AND MADE A PART OF THIS PLAN.
5. CONTRACTOR CERTIFICATION STATEMENT
"I CERTIFY UNDER PENALTY OF LAW THAT I UNDERSTAND, AND SHALL COMPLY WITH, THE TERMS AND CONDITIONS OF THE STATE OF FLORIDA GENERIC PERMIT FOR STORMWATER DISCHARGE FROM LARGE AND SMALL CONSTRUCTION ACTIVITIES AND THIS STORMWATER POLLUTION PREVENTION PLAN."
6. RESPONSIBLE AUTHORITY CERTIFICATION STATEMENT- "I CERTIFY UNDER PENALTY OF LAW THAT THIS DOCUMENT AND AL ATTACHMENTS WERE PREPARED UNDER MY DIRECTION OR SUPERVISION IN ACCORDANCE WITH A SYSTEM DESIGNED TO ASSURE THAT QUALIFIED PERSONNEL PROPERLY GATHERED AND EVALUATED THE INFORMATION SUBMITTED. BASED ON MY INQUIRY OF THE PERSON OR PERSONS WHO MANAGE THE SYSTEM, OR THOSE PERSONS DIRECTLY RESPONSIBLE FOR GATHERING THE INFORMATION, THE INFORMATION SUBMITTED IS, BEST OF MY KNOWLEDGE AND BELIEF, TRUE, ACCURATE AND COMPLETE. I AM AWARE THAT THERE ARE SIGNIFICANT PENALTIES FOR SUBMITTING FALSE INFORMATION, INCLUDING THE POSSIBILITY OF FINE AND IMPRISONMENT FOR KNOWING VIALATIONS."

0 30 60
Scale: 1" = 30'

CONTRACTOR SHALL CONTACT SUNSHINE STATE ONE-CALL OF FLORIDA, INC. FOR LOCATION OF ALL UTILITIES TWO COMPLETE BUSINESS DAYS PRIOR TO BEGINNING CONSTRUCTION.

811
Know what's below. Call before you dig.

No.	Date	Revision - Description
1		
2		
3		
4		
5		
6		
7		

SYCAMORE ENGINEERING, INC.
• Civil Engineering
• Surveying & Mapping
• Land Planning
• Construction Management
• Landscape Architecture
8370 W. Hillsborough Ave., Suite 205
Tampa, FL 33615
Phone: 813.889.0700
Fax: 813.889.0788
e:mail: greatteam@sycamoreeng.com
F.L. C.A. # 9485 & L.B. # 7961

Project Title: THE SHOPPES AT MERES
Project Location: 1098 SOUTH PINELLAS AVENUE TARPON SPRINGS, FL 33689
Sheet Title: EROSION CONTROL PLAN NOTES

J.D. ALSABBAGH LICENSE NO. 58995 STATE OF FLORIDA PROFESSIONAL ENGINEER
Digitally signed by Jihad D Sabbagh
Date: 2025.05.07 16:01:51 -04'00'
J.D. ALSABBAGH, P.E.
FL P.E. #58995

Job No.	J0308
Drawn by:	FHG
Approved by:	JDA
Date:	04-16-2024

Sheet No.
C-6B

THE DESIGN AND IDEAS INCORPORATED HEREIN, AS AN INSTRUMENT OF PROFESSIONAL SERVICE IS PROPERTY OF SYCAMORE ENGINEERING, INC. DIMENSIONS SHOULD NOT BE OBTAINED BY USING SCALING OF THE PLAN. DIMENSIONS CAN BE OBTAINED BY CONTACTING SYCAMORE ENGINEERING, INC. DIRECTLY. © 2024
THIS PLAN IS NOT TO BE USED FOR ANY PROJECT WITHOUT WRITTEN AUTHORIZATION FROM SYCAMORE ENGINEERING, INC.

CONNECTION & BACKFLOW DETAIL

SCALE: 1" = 5'

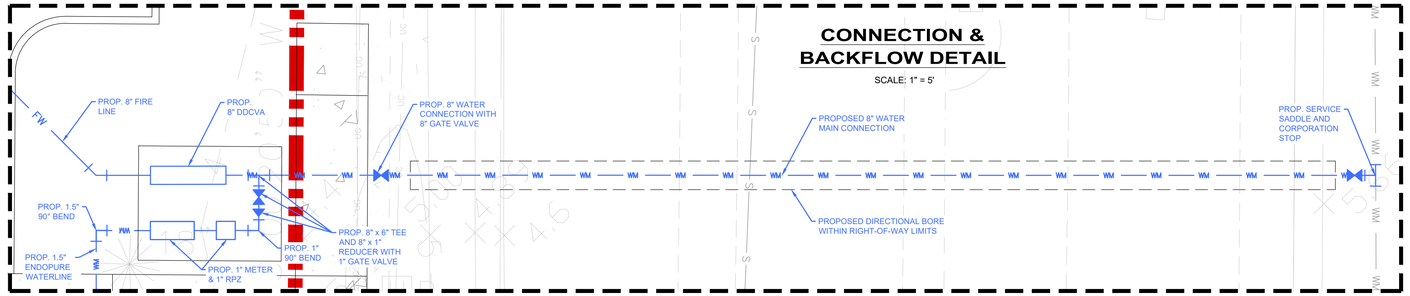

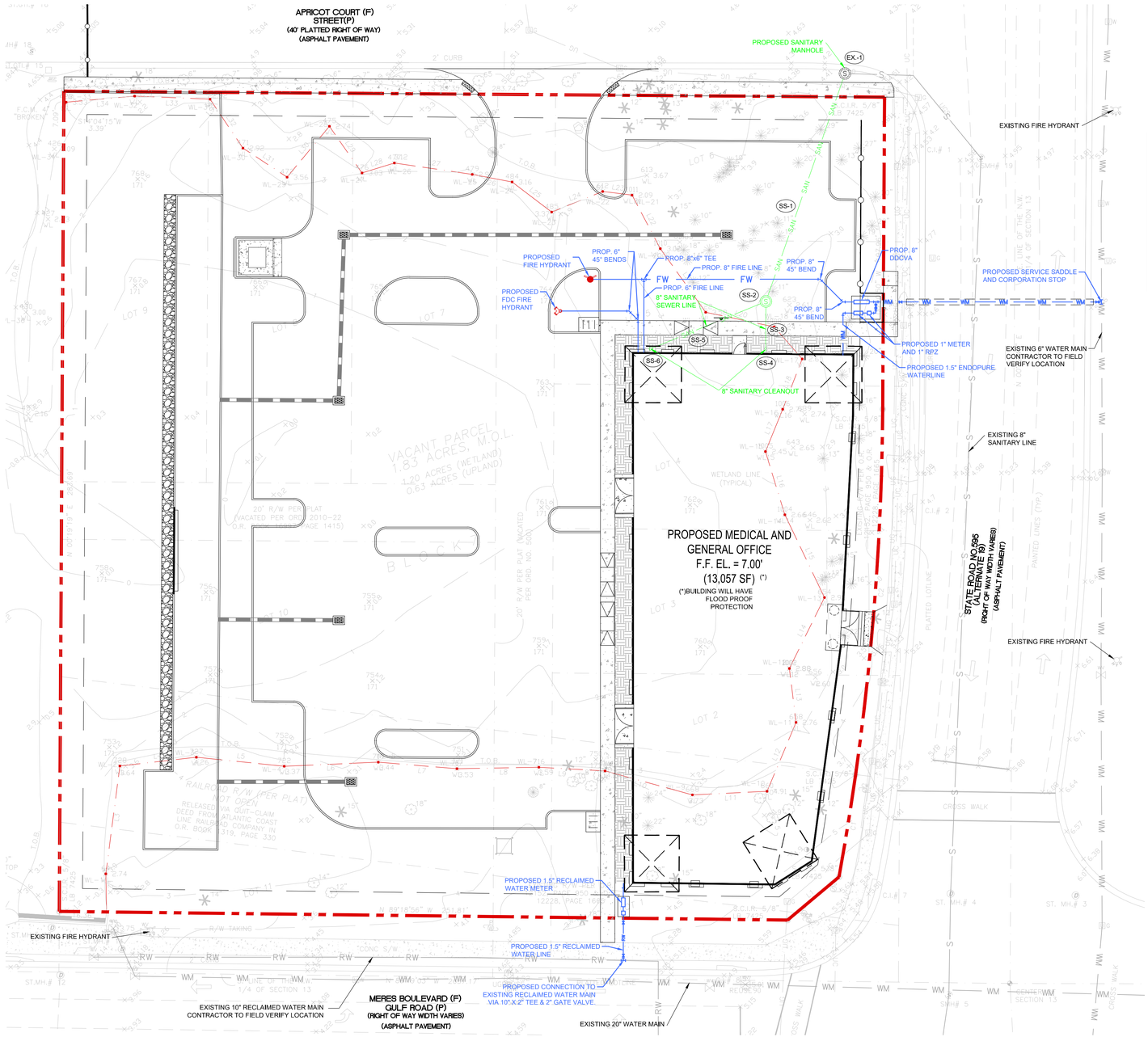

DATUM CONVERSION

ELEVATIONS DEPICTED HEREON BASED UPON N.G.V.D. 1929 DATUM. THE CONVERSION TO N.A.V.D. 1988 IS N.G.V.D. 1929 - 0.85'.

BUILDING FLOOD PROOF

OWNER/DEVELOPER SHALL FLOOD PROOF THE PROPOSED BUILDING TO AN ELEVATION OF 11.0' NAVD 88 PER FEMA REQUIREMENTS & RULES. OWNER WILL HAVE THIRD PARTY MONITORING SERVICE TO ACTIVATE & DO REQUIRED PROCEDURES FOR FLOOD PROTECTION BEFORE & DURING UPCOMING STORM EVENT. PROOF OF AGREEMENT SHOULD BE SUBMITTED TO BUILDING PART MEET DURING BUILDING PLAN REVISION.

UTILITIES SUPPLIER

1. POTABLE WATER FACILITIES: CITY OF TARPON SPRINGS
2. SEWAGE FACILITIES: CITY OF TARPON SPRINGS
3. ELECTRICAL SERVICE: DUKE ENERGY

ATTENTION

1. LOCATION OF EXISTING WATER AND SANITARY SEWER LINES IS APPROXIMATE, UTILIZING TARPON SPRINGS UTILITY ATLAS.
2. PRIOR TO COMMENCING WORK, THE CONTRACTOR SHALL VERIFY LOCATION, ELEVATION AND SIZE OF EXISTING LINES AT THE POINT OF CONNECTION AND NOTIFY THE ENGINEER OF RECORD AND OWNER/OWNER REPRESENTATIVE OF ANY CONFLICTS OR DISCREPANCIES WITH DESIGN INFORMATION SHOWN IN THESE PLANS
3. CONTRACTOR TO COORDINATE WITH LOCAL POWER COMPANY FOR PROPOSED TRANSFORMER LOCATION ON SITE.
4. CONTRACTOR TO INCLUDE TEMPORARY WATER SOURCE DURING CONSTRUCTION IN CONTRACT BID
5. ALL CLEANOUTS AND MANHOLE COVERS SHALL BE GALVANIZED STEEL.
6. CONTRACTOR SHALL FIELD VERIFY UTILITIES AND THE CONTRACTOR SHALL COMPLETE AND INSTALL BOTH POTABLE WATER AND SANITARY SEWER TAPS.
7. THE CITY REQUIRES 48 HOURS NOTICE PRIOR TO ANY WORK COMPLETED ON THE MAINS.
8. ANY ADJUSTMENTS TO THE UTILITIES DUE TO THE PROJECT ARE THE CONRACTOR'S RESPONSIBILITY.
9. ALL RESTORATION IS THE CONTRACTOR'S RESPONSIBILITY.
10. A SPRINKLER WITHIN THE BUILDING AND FDC WITHIN 100' OF THE ON-SITE HYDRANT WILL BE REQUIRED IF PROPOSED BUILDING SIZE REDUCED IN SIZE TO BELOW BUILDING, THE SPRINKLER SYSTEM SHALL HAVE NO NEED TO HAVE.

WATER & SANITARY SEWER FLOW CALCULATION TABLE 1 (*)

FOR SYSTEM DESIGN ESTIMATED WATER & SEWAGE FLOW

OFFICE BUILDING:
PER 100 SQUARE FEET OF FLOOR SPACE, WHICHEVER IS GREATER 15 GALLONS.

PER EMPLOYEE PER 8 HOUR SHIFT OR 15 GALLONS.

13,057 SF / 100 = 130.57 x 15 GALLONS = 1,958.55 GALLONS
= 1,960 GALLONS FOR WATER DEMAND FLOW

1,960 GALLONS x 0.80 = 1,568 GALLONS FOR SANITARY SEWER DEMAND FLOW

(*) PER FDEP CHAPTER 62-6.008 SYSTEM SIZE DETERMINATION.

DOMESTIC WATER CALCULATIONS MEDICAL &GENERAL OFFICE (3 UNITS)

FIXTURE TYPE	QUANTITY	F.U.	SUB-TOTAL F.U.
WATER CLOSET (TANK TYPE)	5	3	15
SERVICE SINK (1/2")	6	3	18
SERVICE SINK (3/4")	2	7	14
WASH SINK (EACH SET OF FAUCETS)	4	4	16
HOSE CONNECTION (3/4")	1	10	10
DRINKING FOUNTAIN - COOLER	1	1	1
TOTAL FIXTURE UNITS			74
TOTAL GPM:			23
EQUIPMENT MAKE-UP WATER:			N/A
MINIMUM SERVICE SIZE:			1"

CITY OF TARPON SPRINGS UTILITY NOTES

1. ALL UTILITY MATERIAL MUST COMPLY WITH AWWA STANDARDS FOR DESIGN AND CONSTRUCTION OF WATER, WASTEWATER AND RECLAIMED WATER FACILITIES, LATEST EDITION.
2. EXCAVATION, BACKFILL AND SURFACE RESTORATION SHALL BE THE CONTRACTOR'S RESPONSIBILITY. MATERIAL FOR WET TAP LARGER THAN 2" SHALL BE PROVIDED AND INSTALLED BY THE PROJECT CONTRACTOR.
3. CITY OF TARPON SPRINGS UTILITIES SERVICES BRANCH SHALL NOT OWN OR MAINTAIN WATER AND SEWER LINES OR FACILITIES ON-SITE.
4. THE PROPOSED SANITARY SEWER, POTABLE & RECLAIMED CONNECTION POINTS ARE NOT OWNED OR MAINTAINED BY THE CITY OF TARPON SPRINGS UTILITIES SERVICES BRANCH. A LETTER AUTHORIZING THE CONNECTION MUST BE OBTAINED FROM THE SYSTEM OWNER AND FORWARD FOR INCLUSION IN THE PROJECT FILE.
5. FIRE HYDRANTS MUST BE FLOW TESTED AND COLOR CODED BASED ON FLOW RESULTS.
6. FIRE HYDRANTS SHALL BE INSTALLED AND IN SERVICE PRIOR TO THE ACCUMULATION OF COMBUSTIBLES.
7. ALL METERS LOCATED ON THE CUSTOMER SIDE OF THE MASTER METER ARE PRIVATE AND NOT INSTALLED BY THE CITY.
8. PROPOSED GREASE REMOVAL SYSTEM SHALL BE INSPECTED BY THE CITY'S FOG PROGRAM STAFF PRIOR TO THE ISSUANCE OF C.O.
9. EXISTING CITY SEWER MAIN AND MANHOLES ARE CONSTRUCTED OF CLAY PIPE AND BRICK.
10. IRRIGATION TO THE SITE SHALL BE THROUGH RECLAIMED WATER. SEE LANDSCAPE AND IRRIGATION PLAN FOR MORE DETAILS.
11. ALL WATER LINES SHALL BE DIP FROM THE POINT OF CONNECTION UP TO THE METER AND BFP ASSEMBLY. ALL OFF SITE SANITARY SEWER LINES SHALL BE DIP UP TO THE FIRST MANHOLE ON SITE.

PROPOSED SANITARY SEWER SCHEDULE

- EX.-1 PROPOSED SANITARY SEWER MANHOLE
  RIM: 4.40
  INV. EL. = 2.75
- SS-1 83 L.F. ~ 8" PVC GRAVITY SEWER @ 1.00% MIN.
- SS-2 PROPOSED SANITARY MANHOLE
  RIM EL. = 6.90
  N. INV. EL. = 3.84
  SE.& SW. INV. EL. = 3.58
- SS-3 16 L.F. ~ 8" PVC GRAVITY SEWER @ 1.00% MIN.
- SS-4 TWO-WAY 8" CLEANOUT
  INV. EL. = 4.00
- SS-5 42 L.F. ~ 8" PVC GRAVITY SEWER @ 1.00% MIN.
- SS-6 TWO-WAY 8" CLEANOUT
  INV. EL. = 4.00

LEGEND

- S — EXISTING SANITARY SEWER
- SAN — PROPOSED SANITARY SEWER LINE
- WM — PROPOSED WATER LINE
- WM — EXISTING WATER LINE
- UG — EXISTING GAS LINE
- STORM SEWER PIPE
- PROPOSED FIRE HYDRANT
- PROPOSED FDC FIRE HYDRANT

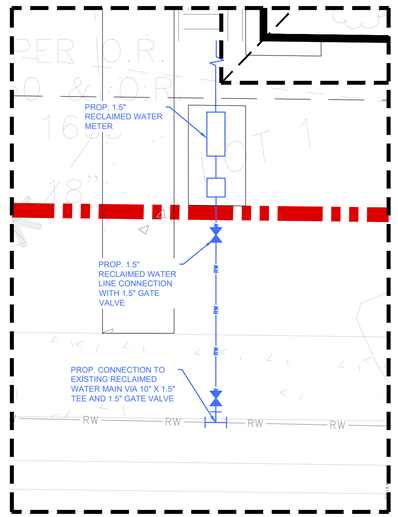

CONNECTION & BACKFLOW DETAIL

SCALE: 1" = 5'

0 20 40
Scale: 1" = 20'

CONTRACTOR SHALL CONTACT SUNSHINE STATE ONE-CALL OF FLORIDA, INC. FOR LOCATION OF ALL UTILITIES TWO COMPLETE BUSINESS DAYS PRIOR TO BEGINNING CONSTRUCTION.
811 Know what's below. Call before you dig.

No.	Date	Revision - Description
1		
2		
3		
4		
5		
6		
7		

SYCAMORE ENGINEERING, INC.
• Civil Engineering
• Site Planning & Mapping
• Land Planning
• Construction Management
• Landscape Architecture
8370 W. Hillsborough Ave., Suite 205
Tampa, FL 33615
Phone: 813.889.0790
Fax: 813.889.0788
email: greatlocation@sycamoreeng.com
FL. C.A. # 9485 & LB. # 7961

Project Title: THE SHOPPES AT MERES
Project Location: 1098 SOUTH PINELLAS AVENUE TARPON SPRINGS, FL 33689
Sheet Title: COMPOSITE UTILITIES PLAN

ALSABBAGH LICENSE NO. 58995 STATE OF FLORIDA PROFESSIONAL ENGINEER
Digitally signed by Jihad D Sabbagh
Date: 2025.05.07 16:02:12 -04'00'
J.D. ALSABBAGH, P.E.
FL P.E. #58995

Job No.	J0308
Drawn by:	FHG
Approved by:	JDA
Date:	04-16-2024

Sheet No.
C-7

THE DESIGN AND IDEAS INCORPORATED HEREIN, AS AN INSTRUMENT OF PROFESSIONAL SERVICE IS PROPERTY OF SYCAMORE ENGINEERING, INC. IT CAN NOT BE USED OR COPIED FOR ANY OTHER PROJECT WITHOUT WRITTEN AUTHORIZATION FROM SYCAMORE ENGINEERING, INC. DIMENSIONS SHOULD NOT BE OBTAINED BY USING SCALING OF THE PLAN. DIMENSIONS CAN BE OBTAINED BY CONTACTING SYCAMORE ENGINEERING, INC. DIRECTLY. © 2024

ONSIT AND OFFSITE PAVING

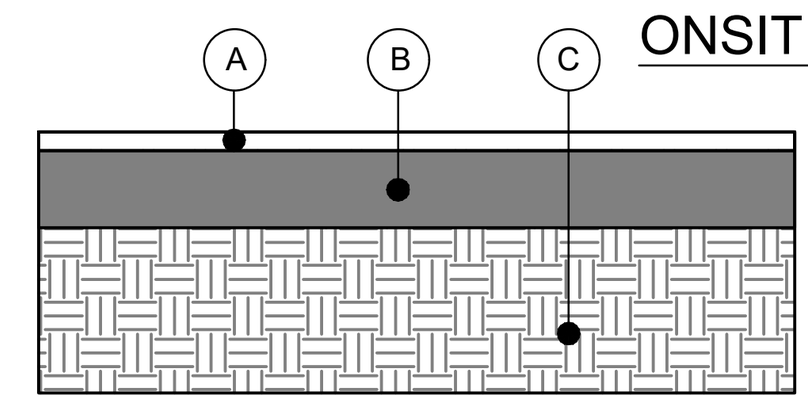

A. 1.50" ASPHALTIC CONCRETE TYPE SP 12.5

B. 6" CRUSHED CONCRETE BASE COURSE 100% OF THE MAX. MODIFIED PROCTOR DRY DNSITY (AASHTO T-180) MIN. LBR 150

C. 12" TYPE B STABILIZATION (98% PROCTOR COMPACTED) MIN. LBR 40 MATERIAL

TYPICAL ASPHALT SECTION
N.T.S.

*FILL BROUGHT TO SITE WILL BE MAX 12" LIFTS COMPACTED
**CONTRACTOR SHALL PROVIDE TEST RESULTS FOR DENSITY TO EOR IN PAVING AREAS.

STRUCTURAL NUMBER CALCULATION:

	THICKNESS		COEF.	
STRUCTURAL COARSE (ASPHALT)	1.50"	x	0.44 =	0.66
CRUSHED CONCRETE BASE	6"	x	0.18 =	1.08
STABILIZATION (TYPE B LBA 40)	9"	x	0.08 =	0.72
			TOTAL	2.46 > 2.3

OPTION 1

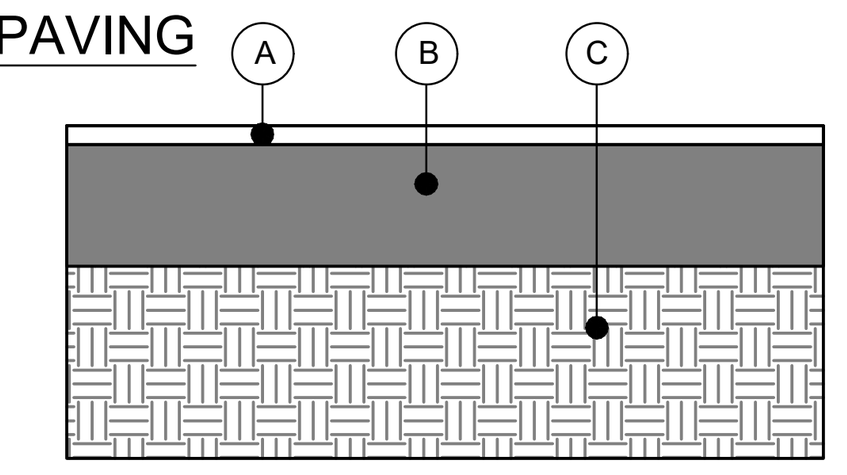

A. 1.50" ASPHALTIC CONCRETE TYPE SP 12.5

B. 9" CRUSHED CONCRETE BASE COURSE 100% OF THE MAX. MODIFIED PROCTOR DRY DNSITY (AASHTO T-180) MIN. LBR 150

C. 12" COMPACTED SUBGRADE (MIN. LBR 20 MATERIAL)

TYPICAL ASPHALT SECTION
N.T.S.

*FILL BROUGHT TO SITE WILL BE MAX 12" LIFTS COMPACTED
**CONTRACTOR SHALL PROVIDE TEST RESULTS FOR DENSITY TO EOR IN PAVING AREAS.

STRUCTURAL NUMBER CALCULATION:

	THICKNESS		COEF.	
STRUCTURAL COARSE (ASPHALT)	1.50"	x	0.44 =	0.66
CRUSHED CONCRETE BASE	6"	x	0.18 =	1.08
STABILIZATION (TYPE B LBA 40)	9"	x	0.08 =	0.72
			TOTAL	2.46 > 2.3

OPTION 2

NOTE: BASE MATERIAL SHALL BE EXTENDED A MINIMUM OF 1 FOOT BEYOND THE BACK OF CURB AND SUB-BASE SHALL BE EXTENDED 1 FOOT MIN. BEYOND THE BASE.

FLEXIBLE PAVEMENT CONSTRUCTION

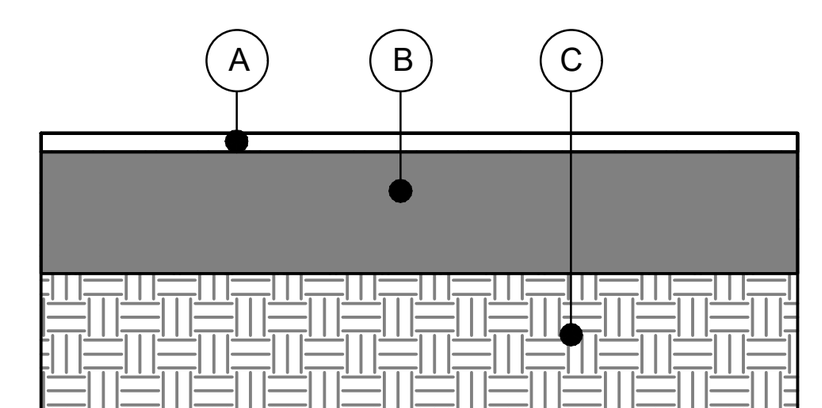

A. 1.50" ASPHALTIC CONCRETE TYPE SP 12.5
B. 8" SOIL CEMENT (300 psi, PLANT MIX)
C. 12" COMPACTED SUBGRAGE (MIN LBR 20 MATERIAL)

TYPICAL ASPHALT SECTION
N.T.S.

*FILL BROUGHT TO SITE WILL BE MAX 12" LIFTS COMPACTED
**CONTRACTOR SHALL PROVIDE TEST RESULTS FOR DENSITY TO EOR IN PAVING AREAS.

STRUCTURAL NUMBER CALCULATION:

	THICKNESS		COEF.	
STRUCTURAL COARSE (ASPHALT)	1.75"	x	0.44 =	0.66
CRUSHED CONCRETE BASE	8"	x	0.15 =	1.20
STABILIZATION (TYPE B LBA 40)	9"	x	0.08 =	0.72
			TOTAL	2.46 > 2.3

OPTION 3

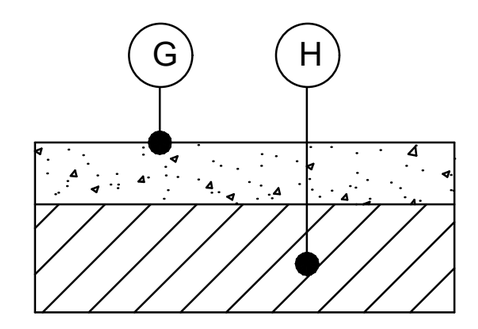

(G) 5" TYPE 1 PORTLAND CEMENT CONCRETE WITH A 4000 PSI COMPRESSIVE STRENGTH AT 28 DAYS WHEN TESTED ACCORDING TO ASTM C-39. 10' X 10' CONTROL JOINT SPACING W/ MIN. 1-1/4" SAW-CUT DEPTH.

(H) 24" MIN. CLEAN, FINE SAND SUBGRADE WITH LESS THAN 10% PASSING A NO. 200 SIEVE, COMPACTED TO AT LEAST 98% OF THE MODIFIED PROCTOR MAXIMUM DRY DENSITY.

CONCRETE PAVEMENT

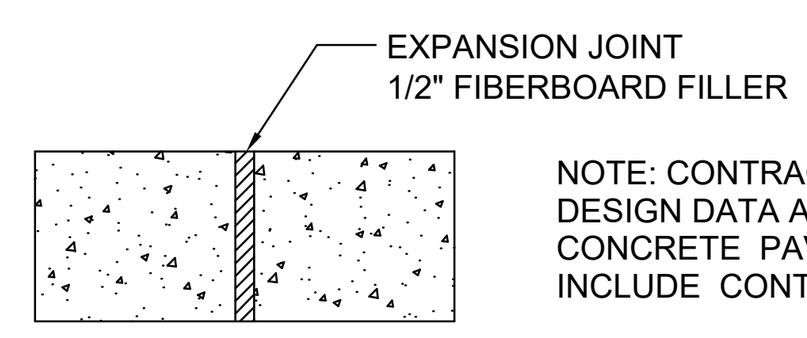

NOTE: CONTRACTOR SHALL COMPLY WITH HILLSBOROUGH COUNTY SPECIFICATIONS, AND DESIGN DATA AND RECOMMENDATION OF THE FCPA "DESIGN AND CONSTRUCTION OF CONCRETE PAVEMENT MANUAL" FOR CONCRETE PAVEMENT JOINT SPACING. THIS IS TO INCLUDE CONTROL/CONSTRUCTION, CONTRACTION AND ISOLATION JOINTS.

RIGID PAVEMENT CONSTRUCTION

NOTES:
1. SUB-GRADE SOILS MUST BE DENSIFIED TO AT LEAST 98% OF MODIFIED PROCTOR TEST MAXIMUM DRY DENSITY TO A DEPTH OF AT LEAST 2 FT. PRIOR TO PLACEMENT OF CONCRETE .
2. WHERE CONCRETE PAVEMENT IS CONSTRUCTED ALL CURBING ADJACENT TO IT SHALL BE INTEGRAL CURB.
3. CONCRETE PAVEMENT SHOULD BE CONSTRUCTED ONLY OVER STABLE AND SMOOTH COMPACTED SUBGRADES. ANY SURFACE DISTURBANCES OR WHEEL RUTTING SHOULD BE PREPARED PRIOR TO PLACEMENT OF CONCRETE.
4. THE SUBGRADE SHOULD BE THOROUGHLY WETTED IMMEDIATELY PRIOR TO THE PLACEMENT OF CONCRETE TO MINIMIZE ABSORPTION OF MOISTURE FROM THE CONCRETE DURING CURING.
5. CONCRETE PAVEMENT THICKNESS SHOULD BE UNIFORM THROUGHOUT, WITH THE EXCEPTION OF CURBING OR THICKENED EDGES.
6. TOTAL DEPTH OF BASE AND SUB BASE WITH OVERALL SIZE LARGER WHAT PROPOSED SHOULD BE ACCEPTABLE AFTER CONSULTATION WITH ENGINEER OF RECORD.
7. SITE PREPARATION TO BE COMPLETED PER SITE GEOTECHNICAL REPORT.

D1 PAVING DETAILS
SCALE : N.T.S.

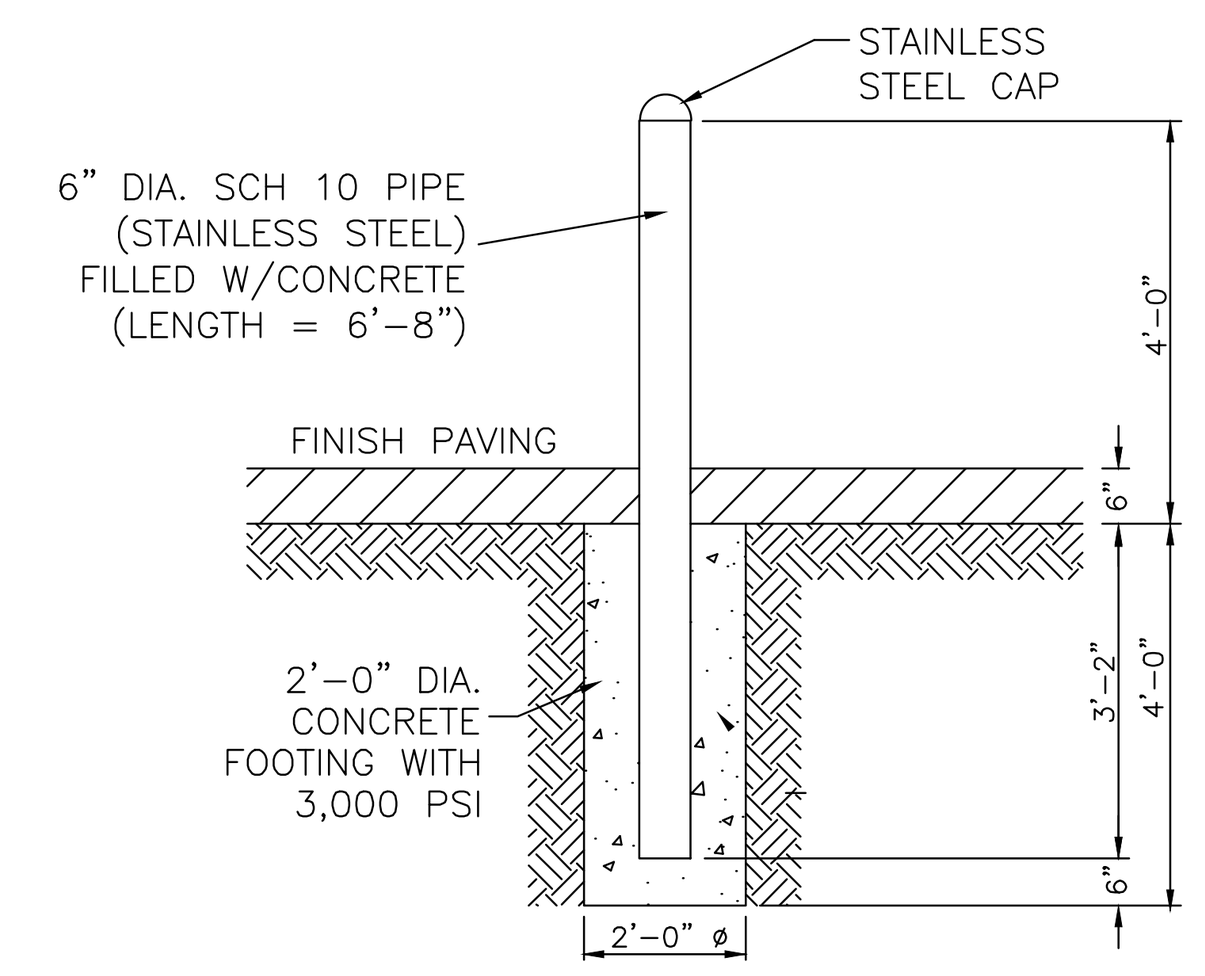

D2 CONCRETE BOLLARD DETAIL
SCALE : N.T.S.

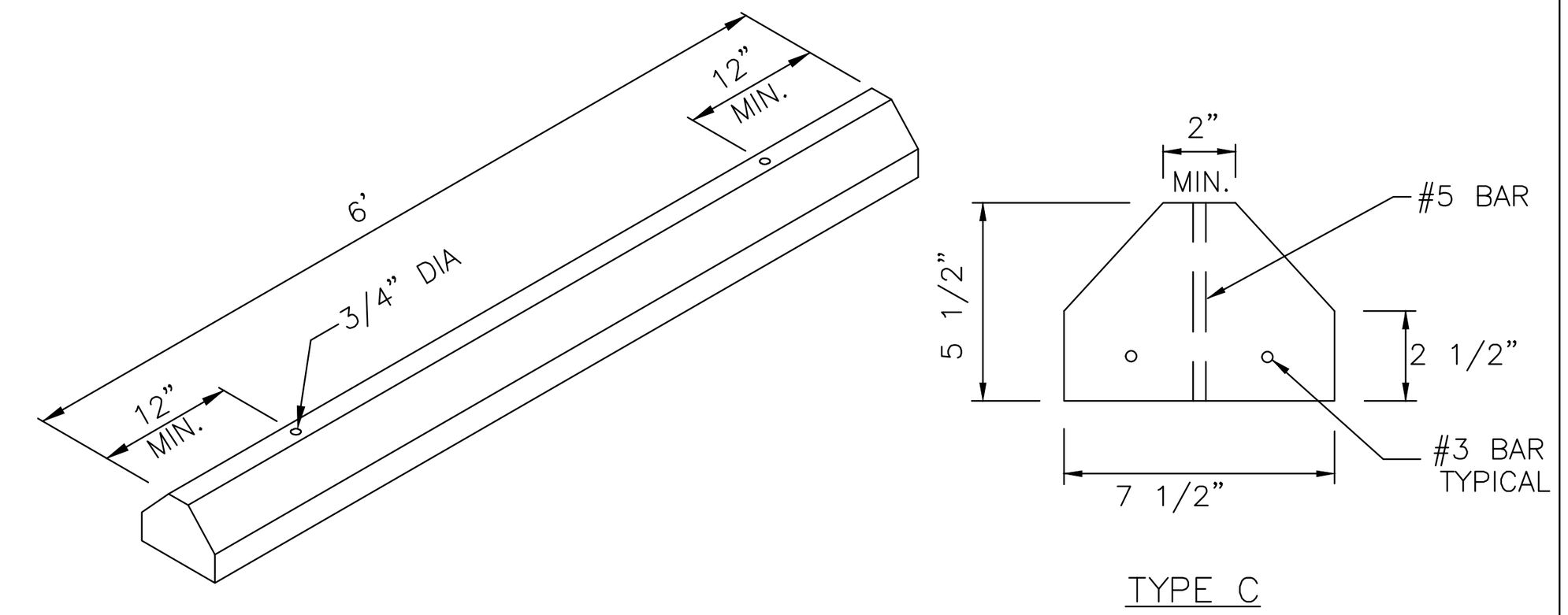

NOTES:
1. CENTER LINE OF WHEEL STOP TO BE 30" AWAY FROM THE EDGE OF PAVEMENT.
2. WHEEL STOPS TO BE FURNISHED AND INSTALLED AT EACH PARKING SPACE IDENTIFIED.
3. CONCRETE TO BE 3,000 PSI
4. WHEEL STOPS TO BE SECURED TO PAVEMENT WITH TWO 18" #5 BARS.

D3 CONCRETE WHEEL STOP DETAIL
SCALE : N.T.S.

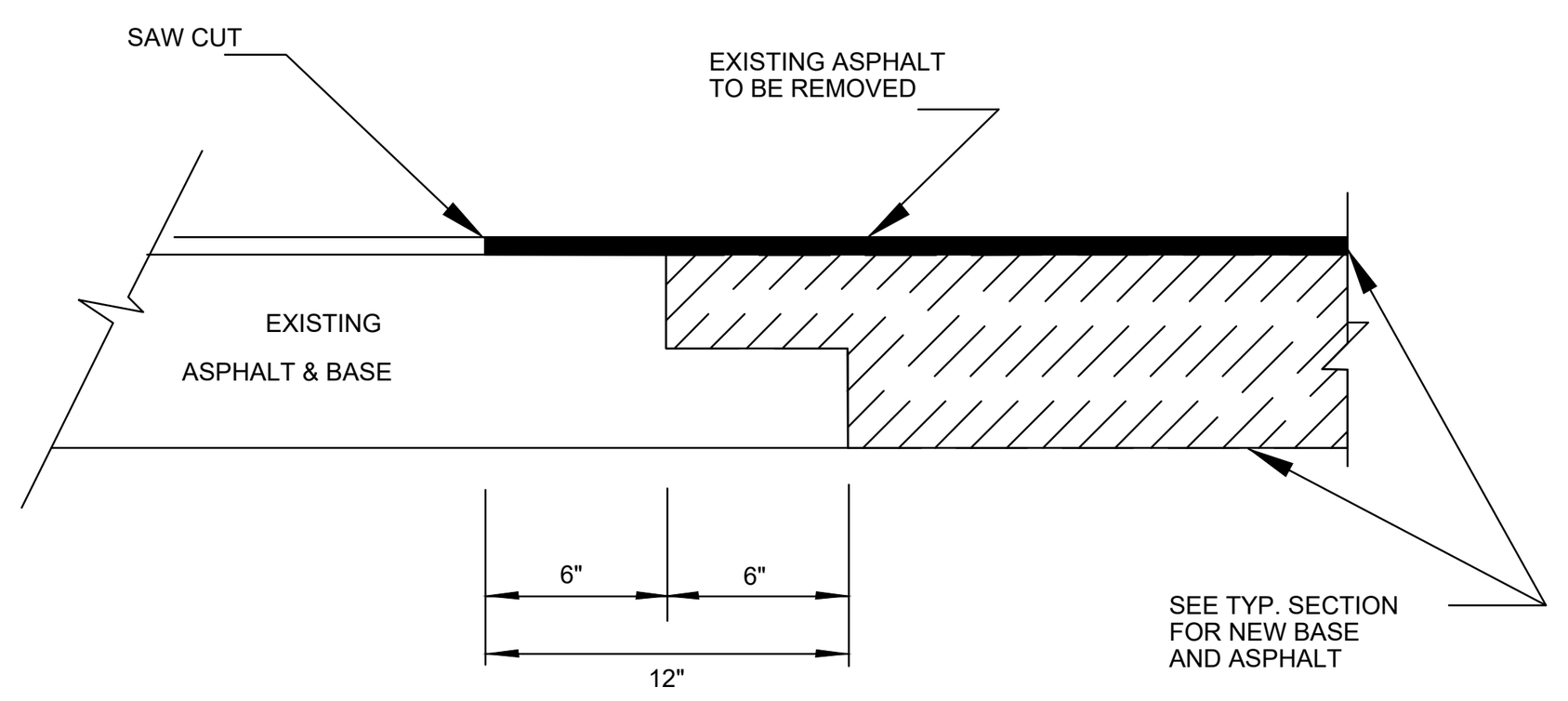

NOTE:

1. THIS METHOD OF PAVEMENT JOINT SHALL BE USED FOR ANY APPLICATION OR CONSTRUCTION WHERE PROPOSED PAVEMENT AND BASE WILL BE CONNECTED TO EXISTING PAVEMENT AND BASE.

D4 PAVEMENT JOINT
SCALE : N.T.S.

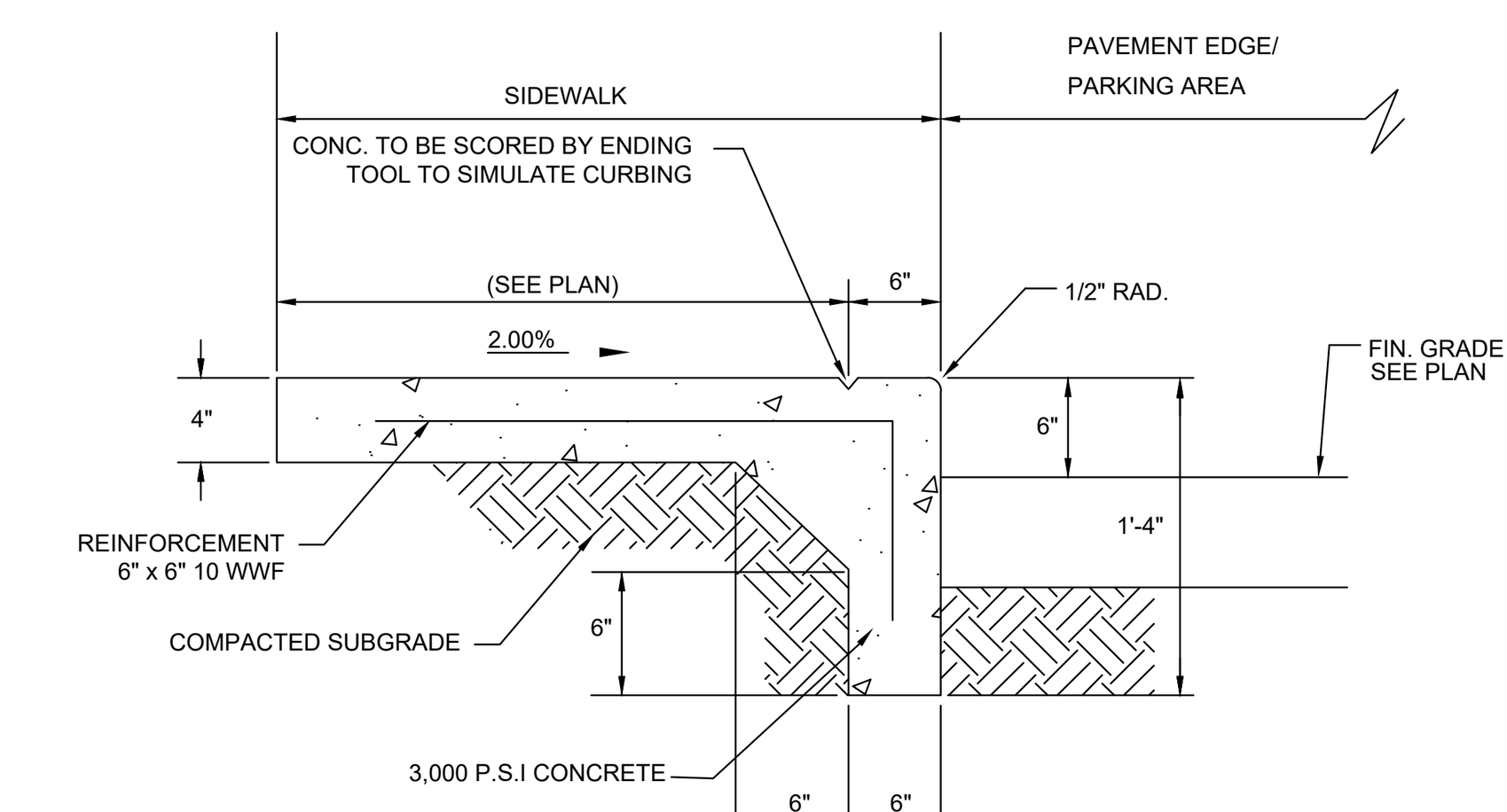

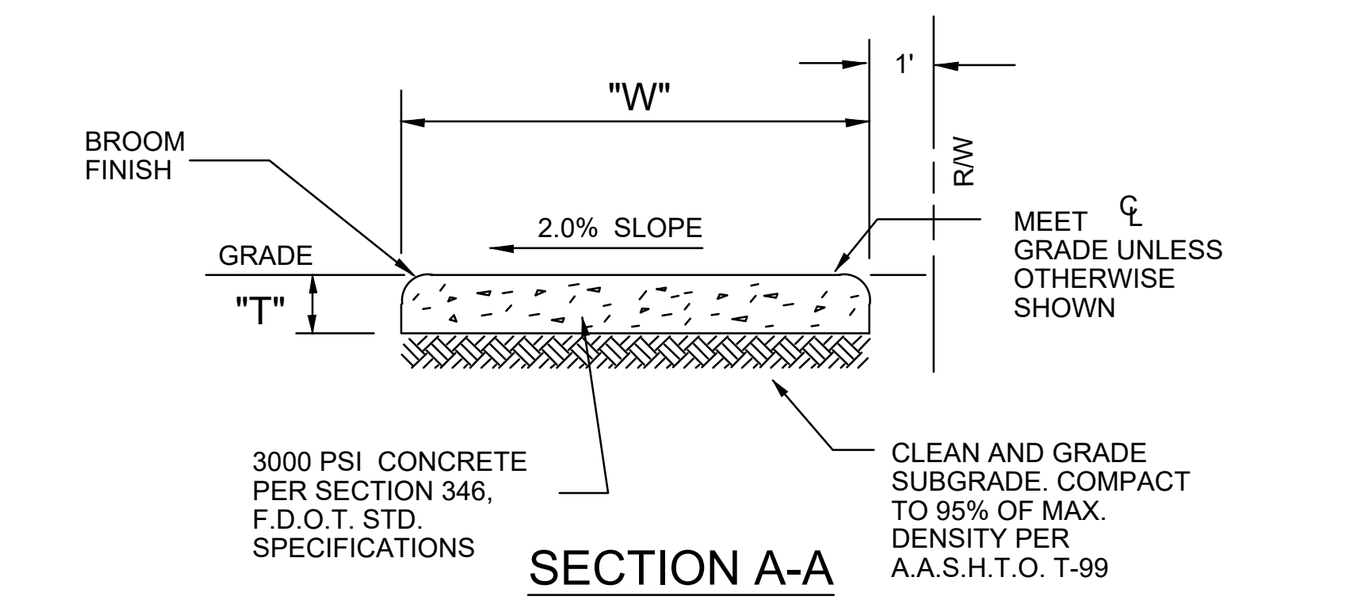

SECTION A-A

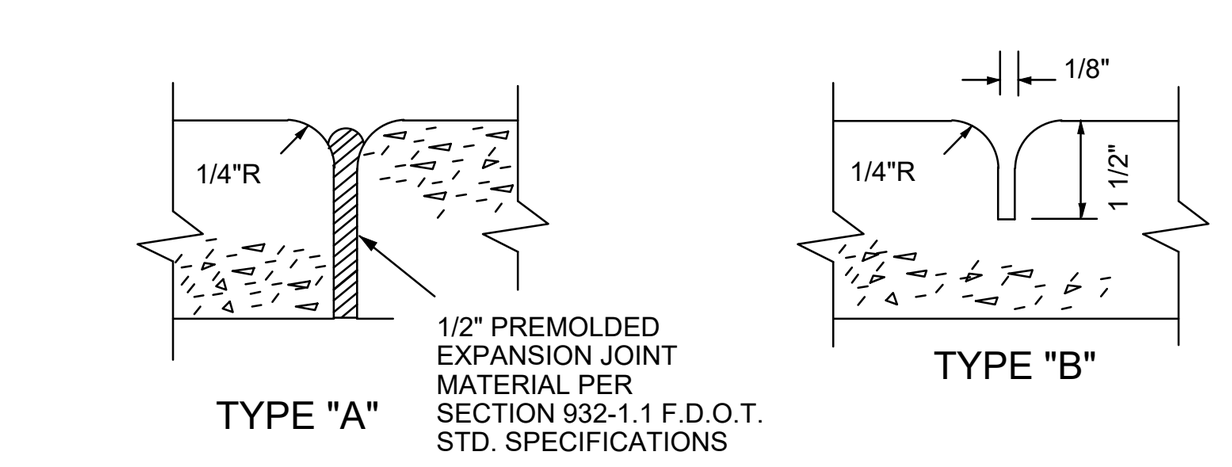

SIDEWALK JOINTS

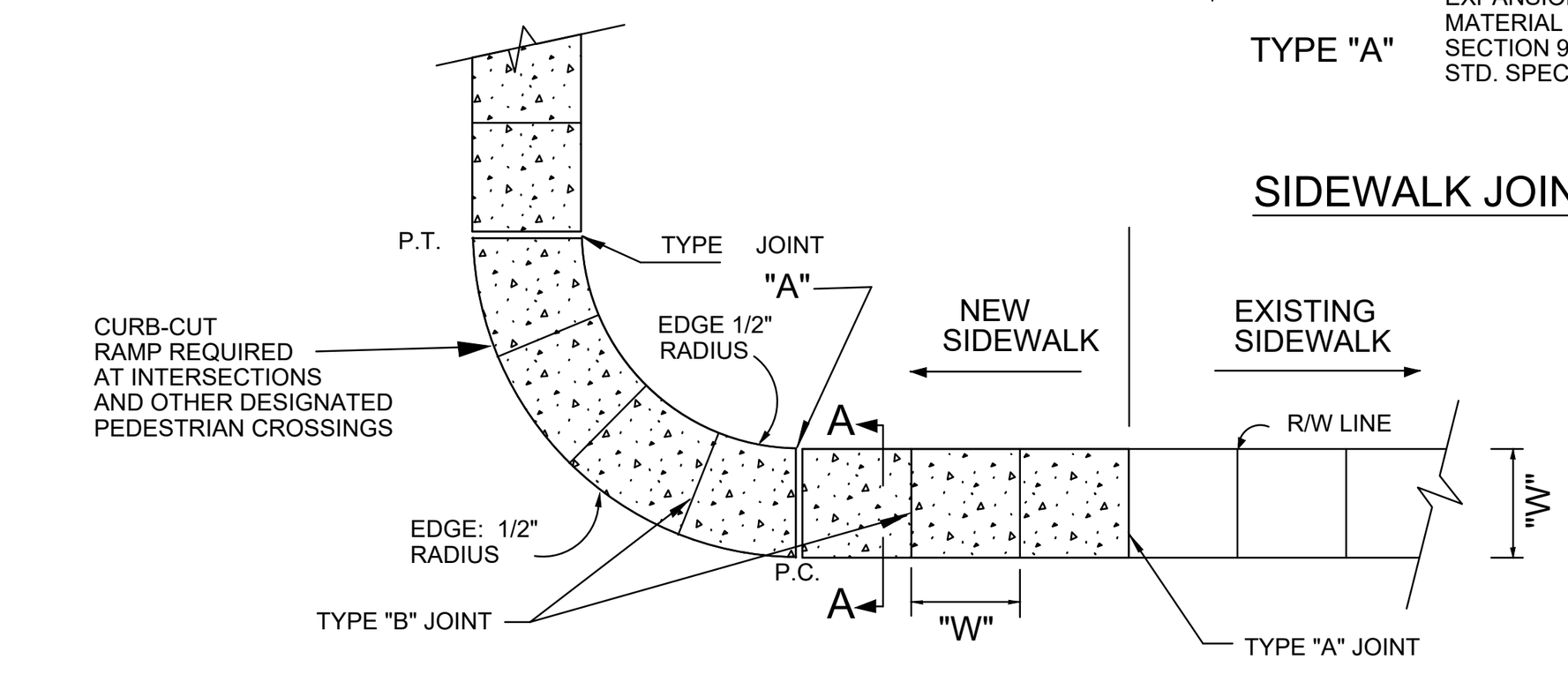

PLAN

TABLE OF SIDEWALK THICKNESS - "T"	
WITHIN 10' OF CROSS-STREETS, AT DRIVEWAYS & OTHER AREAS	4"

TABLE OF SIDEWALK JOINTS

TYPE	LOCATION
"A"	P.C. AND P.T. OF CURVES JUNCTION OF EXISTING AND NEW SIDEWALKS AND EVERY 50' FOR 5' WIDE
"B"	WIDTH OF SIDEWALK CENTER TO CENTER ON SIDEWALKS SCORED DURING PLACEMENT OR SAWCUT WITHIN 24 HOURS OF PLACEMENT.
"A"	WHERE SIDEWALK ABUTS CONCRETE CURBS, DRIVEWAYS, AND SIMILAR STRUCTURES.

D5 SIDEWALK DETAILS
SCALE : N.T.S.

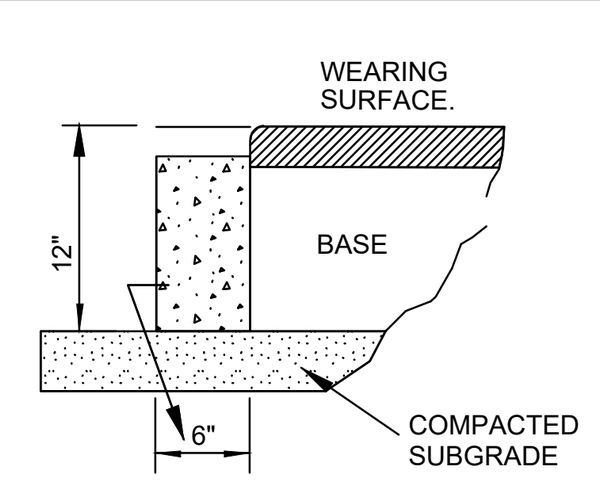

CONCRETE HEADER CURB

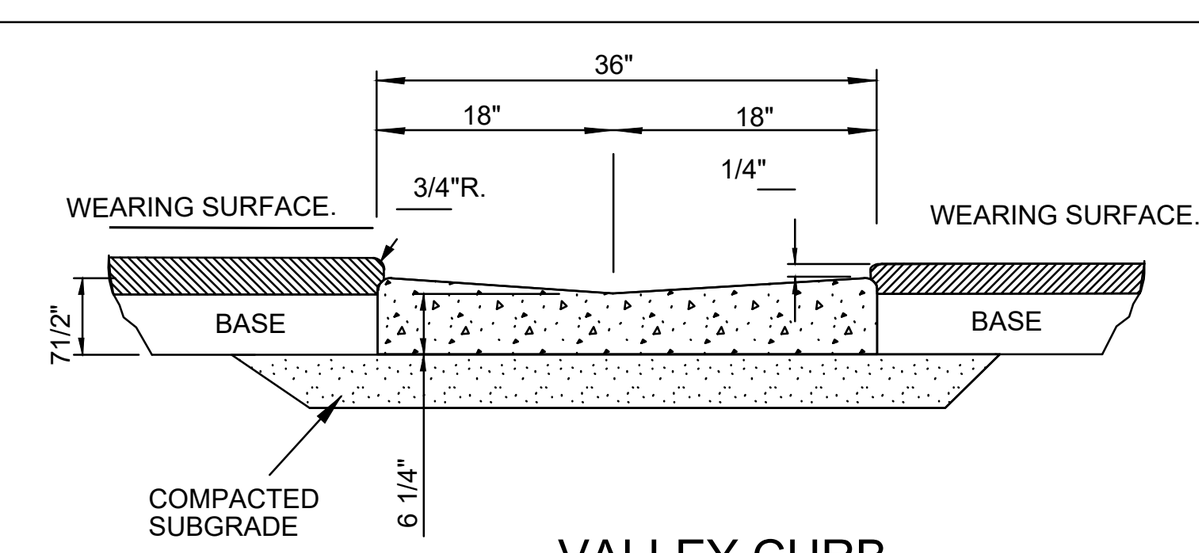

VALLEY CURB

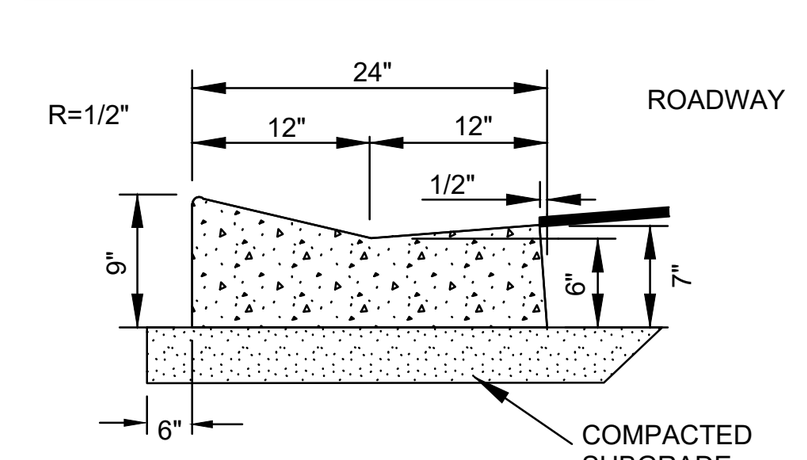

"MIAMI" CURB

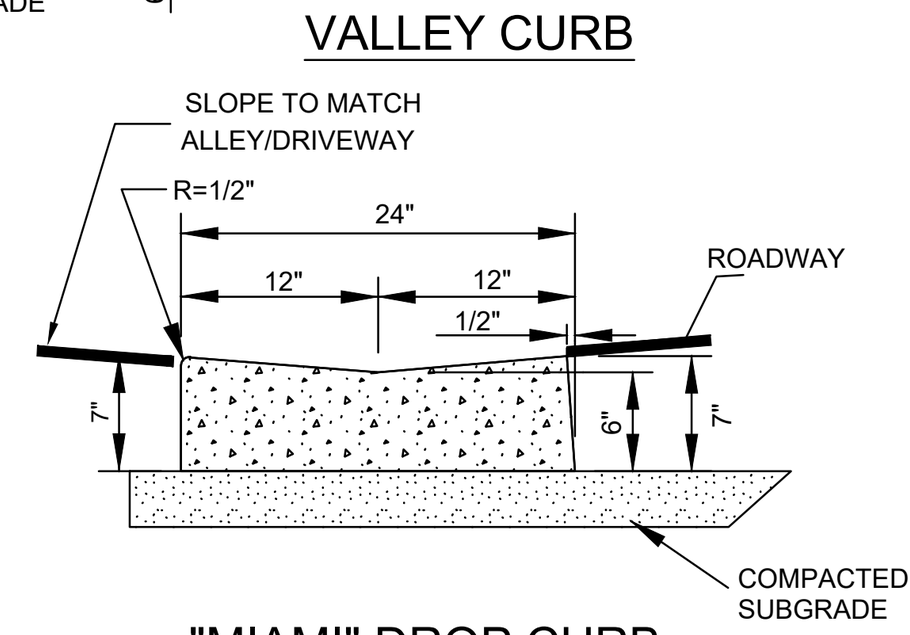

"MIAMI" DROP CURB
(AT DRIVEWAYS AND ALLEYS)

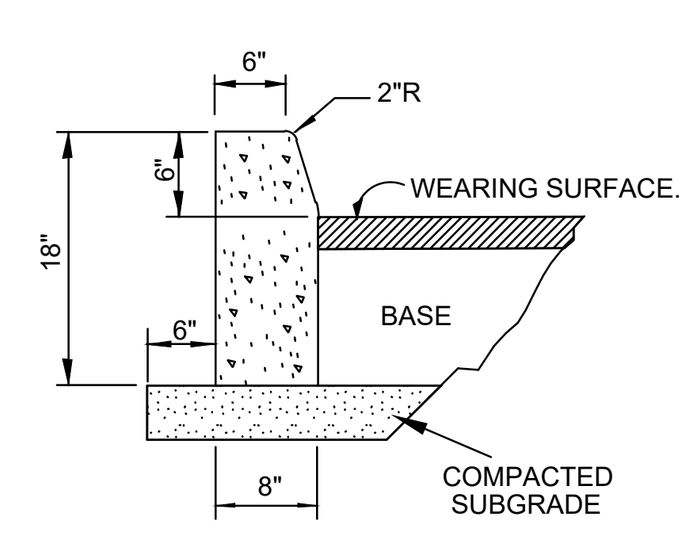

FDOT TYPE "D"
CONCRETE CURB

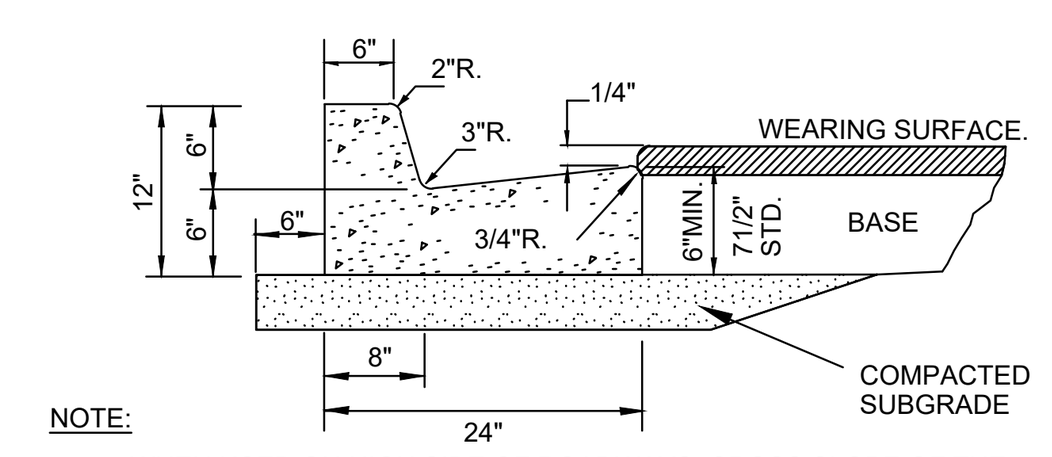

NOTE:
WHEN USED ON HIGH SIDE OF ROADWAYS, CROSS SLOPE OF THE GUTTER SHALL MATCH THE CROSS SLOPE OF THE ADJACENT PAVEMENT AND THE THICKNESS OF THE LIP SHALL BE 6".

FDOT TYPE "F"
CONCRETE CURB AND GUTTER

NOTES:
1. ROADWAY SUBGRADE SHALL IN ALL CASES EXTEND 6" BEYOND CURBING.
2. SAWCUTS AT 10' CENTERS SHALL BE MADE WITHIN 24 HOURS OF CONCRETE PLACEMENT.
3. CONCRETE SHALL BE 3,000 P.S.I.
4. THE CONCRETE FOR CURBS SHALL BE DEPARTMENT OF TRANSPORTATION CLASS "I" CONCRETE, AND HAVE A COMPRESSIVE STRENGTH OF 2500 PSI.
5. ALL CURBS SHALL HAVE CONTRACTION JOINTS AND SHALL BE CONSTRUCTED AT INTERVALS NOT TO EXCEED 10'- 0" ON CENTERS FOR ALL CURBS.

D6 CURB AND GUTTER
SCALE : N.T.S.

6" ROOF DRAIN TAP

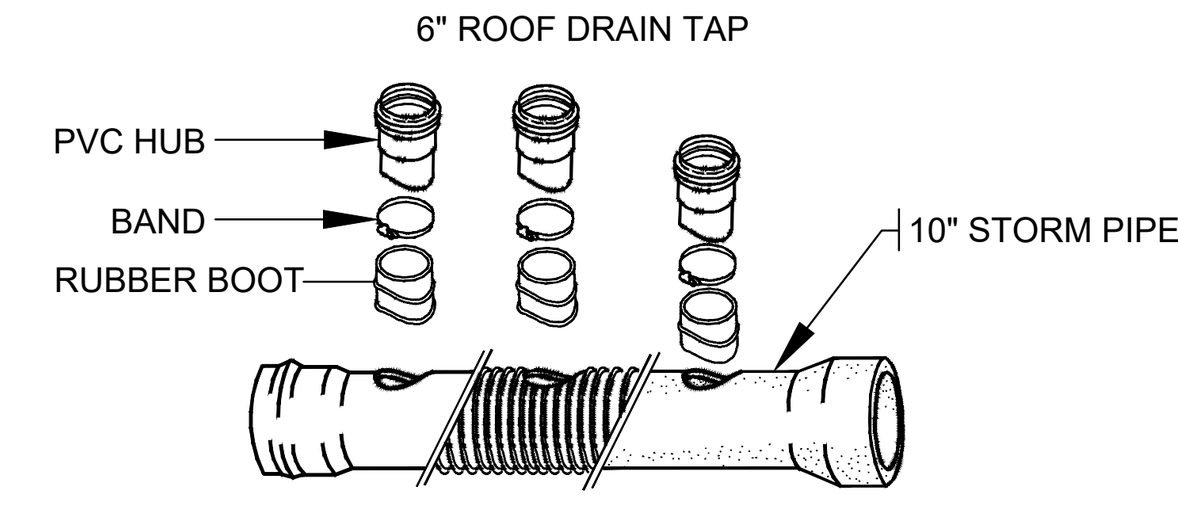

NOTE:
EXERCISE CARE WHEN DRILLING INTO EXISTING MAIN, SO THAT PIPE IS NOT CRACKED OR FRACTURED.
INSERT-A-TEE DETAIL (RETROFIT CONNECTION ONLY)

D7 INSERTA-TEE DETAIL
SCALE : N.T.S.

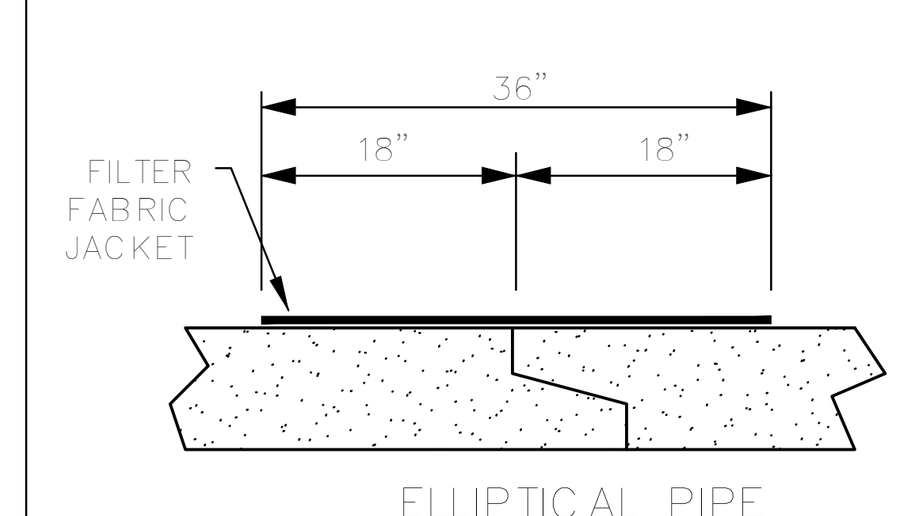

ELLIPTICAL PIPE

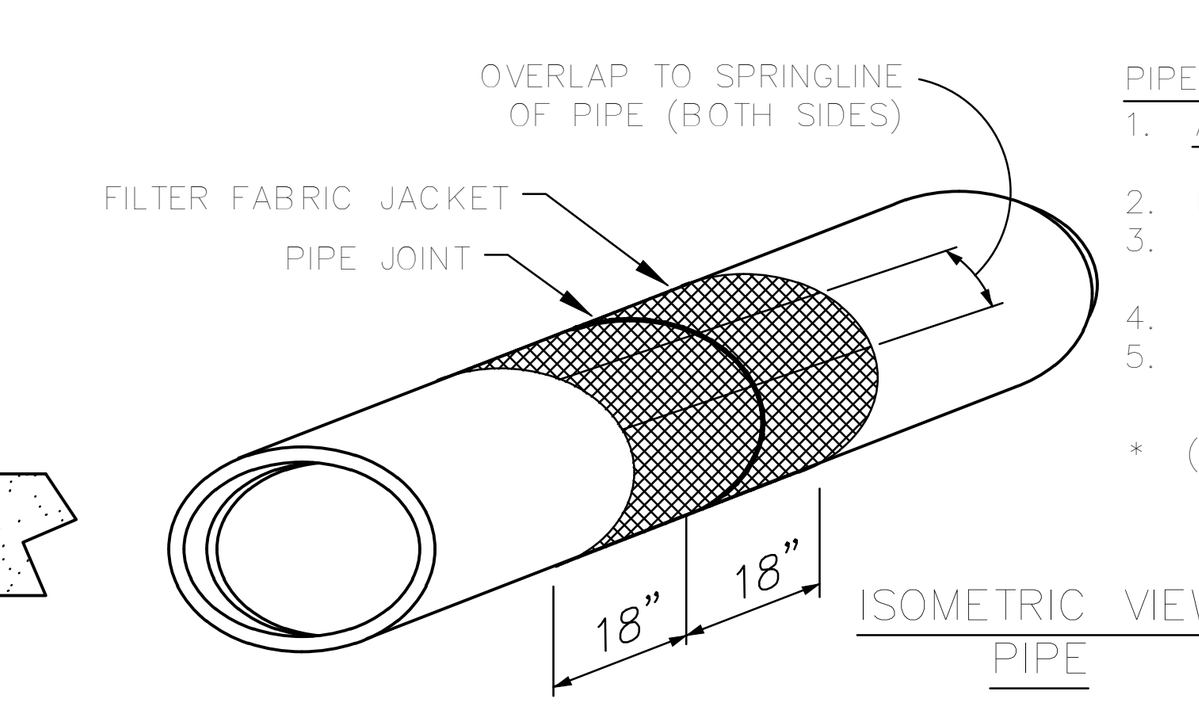

ISOMETRIC VIEW
PIPE

PIPE JOINT NOTES:
1. ALL JOINTS OF ALL PIPE SHALL BE WRAPPED WITH FILTER FABRIC WHICH SHALL EXTEND A MINIMUM OF 18" ON BOTH SIDES OF JOINT (FILTER FABRIC PER F.D.O.T. INDEX 199 D-3)
2. FILTER FABRIC SHALL OVERLAP ON TOP OF PIPE DOWN TO SPRING LINE OF PIPE ON BOTH SIDES
3. ALL STORM DRAINAGE PIPE SHALL BE 15" MIN. DIAMETER R.C.P. OR ITS HYDRAULIC EQUIVALENT UNLESS APPROVED OTHERWISE IN WRITING BY CITY MANAGER OR HIS DESIGNEE
4. CONFLICT STRUCTURES SHALL BE APPROVED ON A CASE BY CASE BASIS
5. ALL STORM INLETS, CATCH BASINS & MANHOLES SHALL BE PRECAST CONCRETE SEE F.D.O.T. ROAD & TRAFFIC DESIGN STANDARDS (LATEST EDITION)

* (EXTERIOR WALL JOINTS SHALL BE WRAPPED WITH CON-WRAP, E-Z WRAP OR APPROVED EQUAL)

FILTER FABRIC JACKET FOR PIPE JOINTS

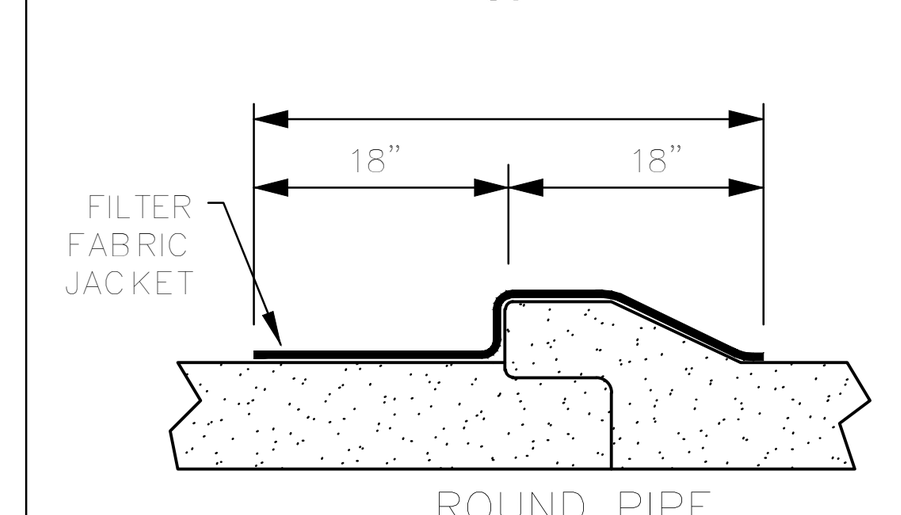

ROUND PIPE

PIPE REQUIREMENTS:
1. REINFORCED CONCRETE PIPE (ASTM C 76) CLASS III OR STRONGER BASED ON "D" LOAD; OR FRCP (FIBER-MIX) CONCRETE PIPE; PER: ASTM C1450 AND F.D.O.T. SPEC. SECTION 941., OR LATEST EDITION.
2. PRE-STRESSED CONCRETE PIPE (AWWA C301) SHALL BE APPROVED ON A CASE BY CASE BASIS
3. CORRUGATED ALUMINUM PIPE SHALL BE SUBJECT TO SPECIAL APPROVAL BY CITY MANAGER OR DESIGNEE
4. CORRUGATED SMOOTH BORE HDPE PIPE – 12"⌀ TO 42"⌀ (AASHTO M294, TYPE S) INTEGRALLY MOLDED RUBBER GASKETED, BELL & SPIGOT (ASTM F477) OR 42"⌀ TO 60"⌀ (AASHTO M294 TYPE D OR AASHTO MP7 TYPE D). WELDED-ON RUBBER GASKETED, BELL & SPIGOT (ASTM F477).
   * (CORRUGATED SMOOTH BORE HDPE SHALL BE APPROVED ON A CASE BY CASE BASIS.) TRENCH INSTALLATION – USING SURFACE LIVE-LOAD CONDITION OF H25 PER: ASTM D2321 (FLEXIBLE AND RIGID PAVEMENTS).

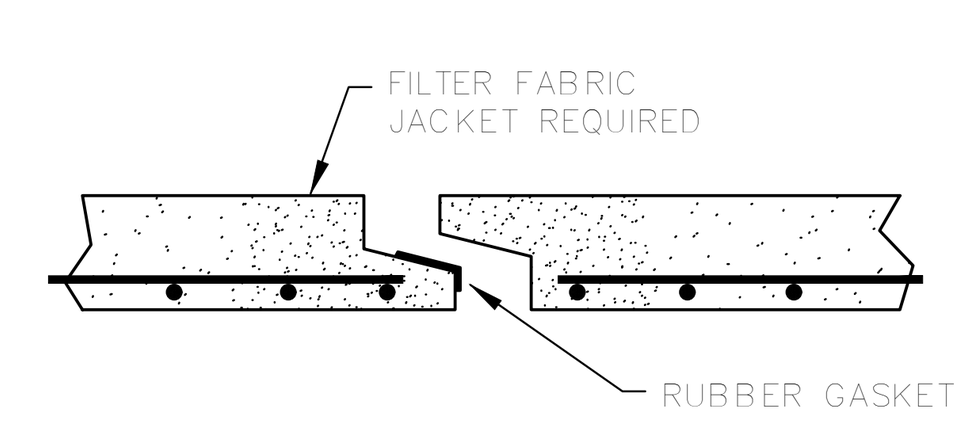

PROFILE RUBBER WATER-TIGHT
'O'-RING GASKET
BEFORE PULL-UP

GENERAL NOTES:
1. ALL PAVEMENT MARKINGS AND TRAFFIC CONTROLS SHALL COMPLY WITH THE "MANUAL OF UNIFORM TRAFFIC CONTROL DEVICES" (M.U.T.C.D.), LATEST EDITION AS PUBLISHED BY THE FLORIDA DEPARTMENT OF TRANSPORTATION (F.D.O.T.)
2. HANDICAP RAMPS SHALL COMPLY WITH THE "AMERICANS WITH DISABILITIES ACT" OF 1992
3. ALL PAVING AND DRAINAGE STRUCTURES (INCLUDING CURBING) SHALL COMPLY WITH F.D.O.T. "STANDARDS FOR ROAD AND BRIDGE CONSTRUCTION," LATEST EDITION.
4. RECORDINGS FROM CLOSED CIRCUIT TELEVISION INSPECTIONS CONDUCTED BY A CONTRACT TV INSPECTOR EMPLOYED BY THE DEVELOPER SHALL BE PROVIDED TO THE CITY ON A DVD AND INCLUDE A WRITTEN REPORT CORRESPONDING TO THE DVD RESULTS. A POST CLOSED CIRCUIT TELEVISION INSPECTION SHALL BE REQUIRED BY THE DEVELOPER PRIOR TO THE EXPIRATION OF THE MAINTENANCE BOND.

CONCRETE PIPE JOINTS

D8 CONCRETE PIPE JOINT AND FILTER FABRIC JACKET DETAILS
SCALE : N.T.S.

0 0 0
Scale: N.T.S.

CONTRACTOR SHALL CONTACT SUNSHINE STATE ONE-CALL OF FLORIDA, INC. FOR LOCATION OF ALL UTILITIES TWO COMPLETE BUSINESS DAYS PRIOR TO BEGINNING CONSTRUCTION.

811
Know what's **below. Call** before you dig.

No.	Date	Revision - Description
1	06-28-2022	REVISED AS PER COUNTY COMMENTS
2		
3		
4		
5		
6		
7		

SYCAMORE ENGINEERING, INC.
• Civil Engineering
• Surveying & Mapping
• Land Planning
• Construction Management
• Landscape Architecture
8370 W. Hillsborough Ave., Suite 205
Tampa, FL 33615
Phone: 813.889.0700
Fax: 813.889.0788
e.mail: greatteam@sycamoreeng.com
F.L. C.A. # 9485 & L.B. # 7961

Project Title: THE SHOPPES AT MERES

Project Location: 1098 SOUTH PINELLAS AVENUE
TARPON SPRINGS, FL 33689

Sheet Title: GENERAL DETAILS SHEET

J. D. ALSABBAGH LICENSE NO. 58995 STATE OF FLORIDA PROFESSIONAL ENGINEER
Digitally signed by Jihad D Sabbagh
Date: 2025.05.07 16:02:37 -04'00'
J.D. ALSABBAGH, P.E.
FL P.E. #58995

Job No.	J0308
Drawn by:	FHG
Approved by:	JDA
Date:	04-16-2024

Sheet No.
C-8

THE DESIGN AND IDEAS INCORPORATED HEREIN, AS AN INSTRUMENT OF PROFESSIONAL SERVICE IS PROPERTY OF SYCAMORE ENGINEERING, INC. IT CAN NOT BE USED OR COPIED FOR ANY OTHER PROJECT WITHOUT WRITTEN AUTHORIZATION FROM SYCAMORE ENGINEERING, INC. DIMENSIONS SHOULD NOT BE OBTAINED BY USING SCALING OF THE PLAN. DIMENSIONS CAN BE OBTAINED BY CONTACTING SYCAMORE ENGINEERING, INC. DIRECTLY. © 2024

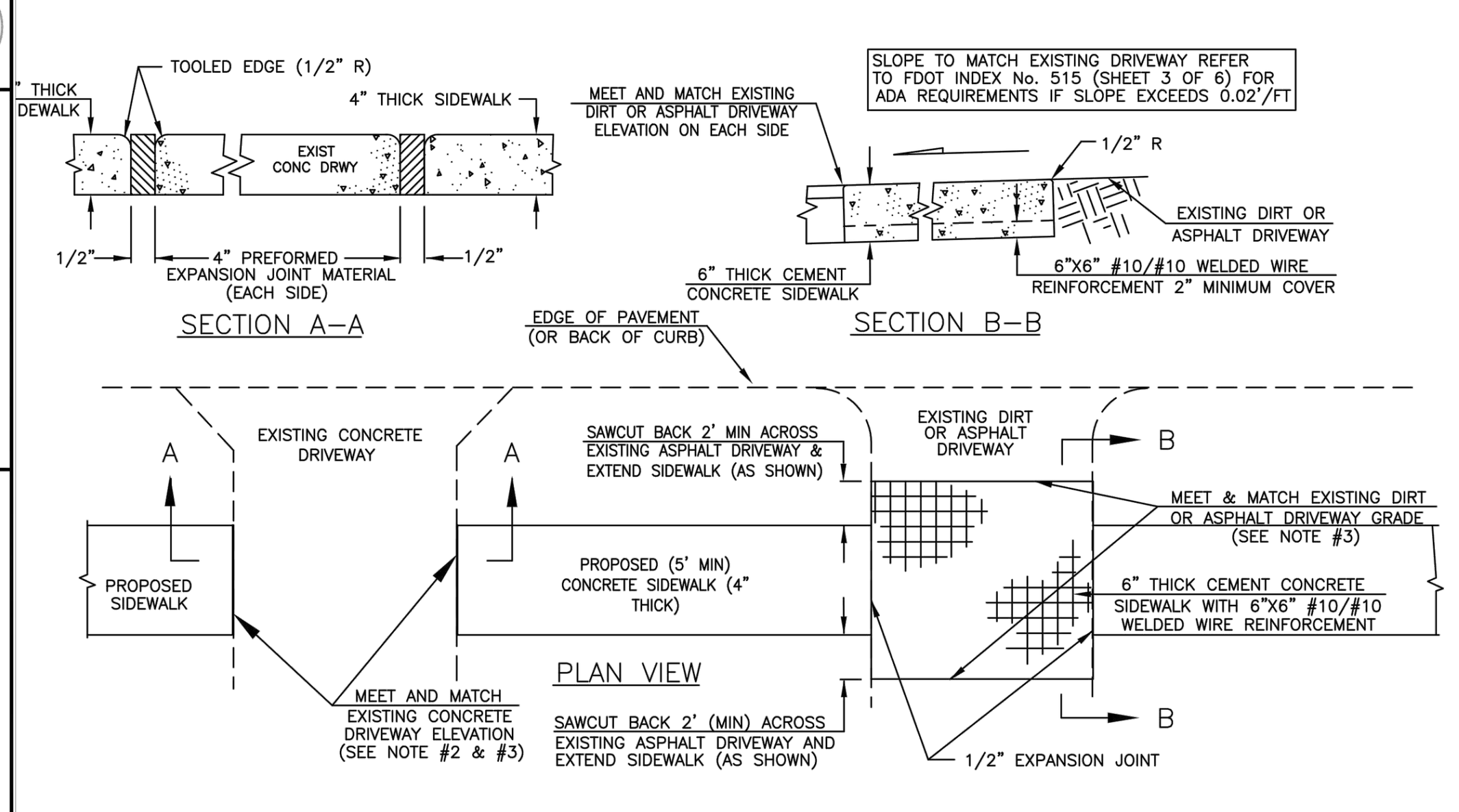

NOTES:

1. SEE PLANS FOR LIMITS OF SIDEWALKS AT ALL DRIVEWAYS.
2. PLACE 1/2" EXPANSION JOINT WHERE CONCRETE ABUTS CONCRETE CURBS, SIDEWALKS DRIVEWAYS.
3. SIDEWALK SHALL COMPLY WITH FDOT INDEX No. 515 AND CITY OF TARPON SPRINGS ORDINANCE 132.00.
4. REMOVE TREE ROOTS WITHIN 10" OF PROPOSED GRADE.
5. SIDEWALKS ALONG RURAL CROSS SECTION ROADWAYS WHERE VEHICLES CAN CROSS THE SIDEWALK SHALL BE 6" THICK.

CITY OF TARPON SPRINGS
PINELLAS COUNTY, FLORIDA
SIDEWALK THROUGH EXISTING DRIVEWAYS
DATE 12/15/15 | INDEX R-13 | SCALE N.T.S. | SHEET 1 OF 1

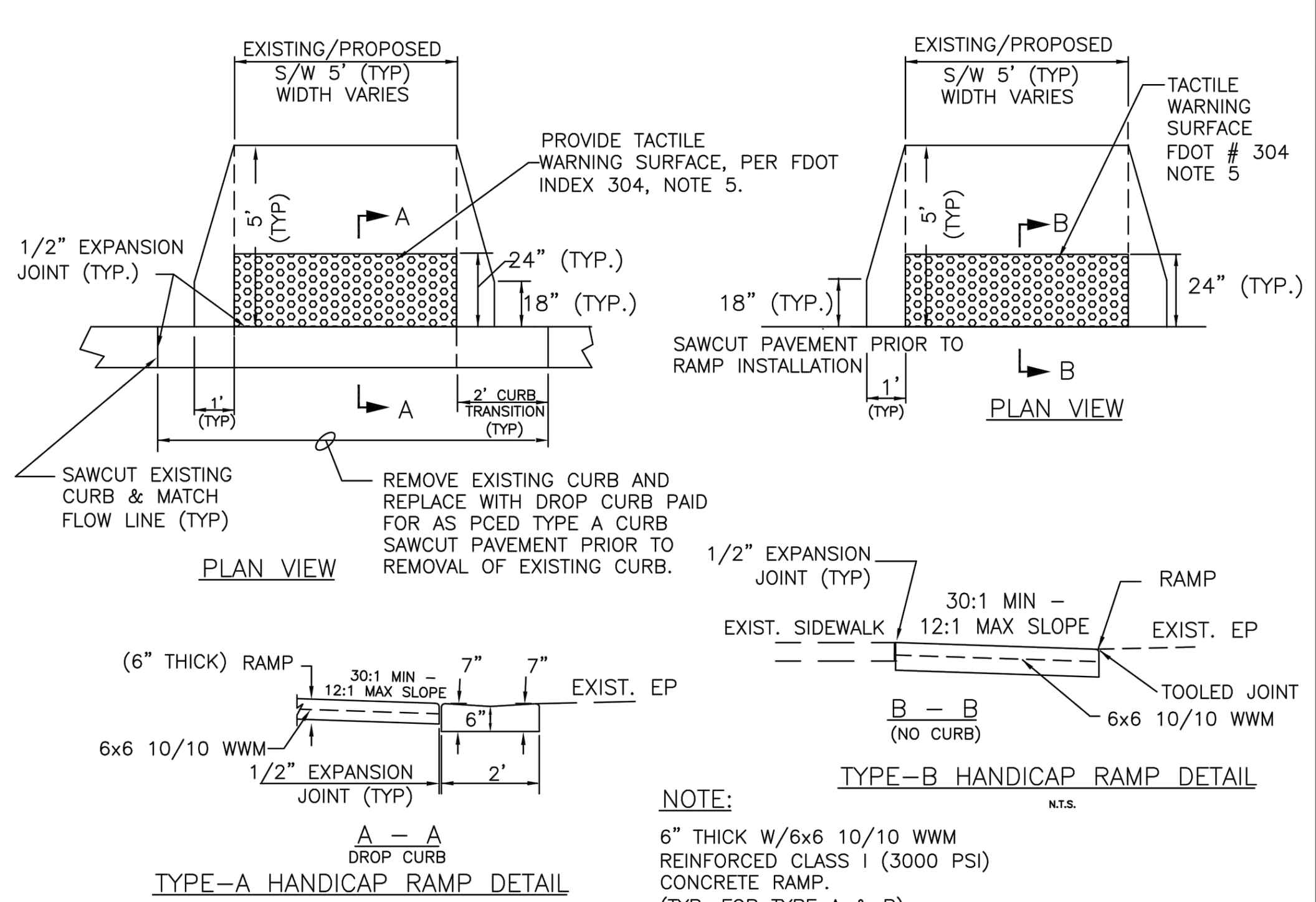

NOTE:
6" THICK W/6x6 10/10 WWM REINFORCED CLASS I (3000 PSI) CONCRETE RAMP. (TYP. FOR TYPE A & B)

CITY OF TARPON SPRINGS
PINELLAS COUNTY, FLORIDA
TYPE "A" AND "B" HANDICAP RAMP DETAIL
DATE 12/15/15 | INDEX R-15 | SCALE N.T.S. | SHEET 1 OF 1

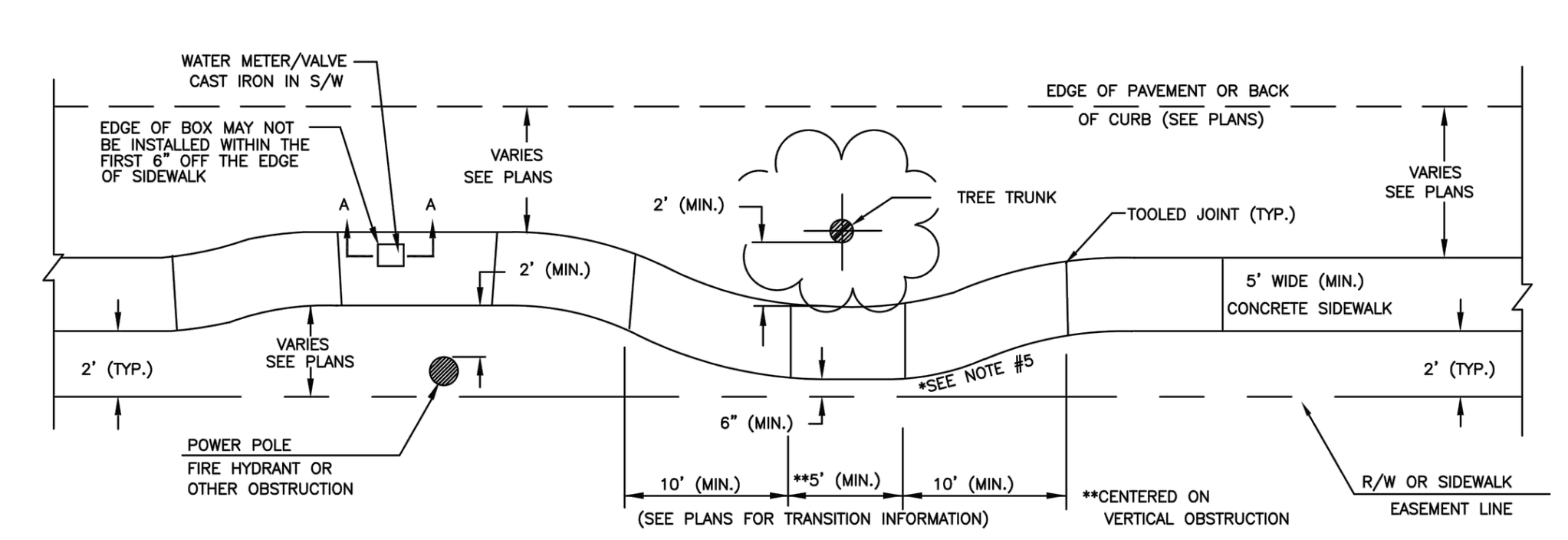

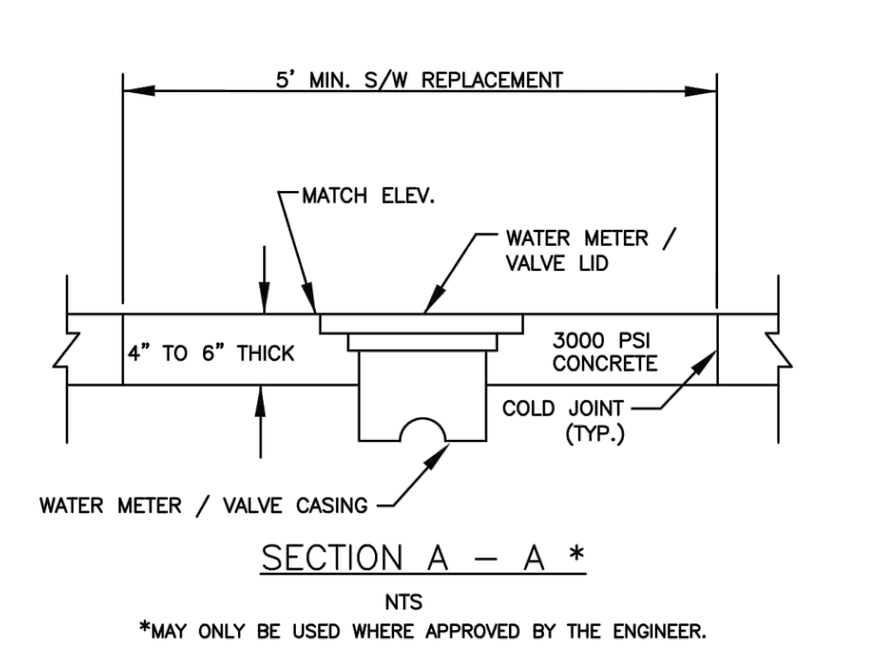

NOTE:

1. ADJUST SIDEWALK TO AVOID OBSTRUCTIONS, AS SHOWN, OR AS DIRECTED BY THE ENGINEER, IN ACCORDANCE WITH FDOT MANUAL OF UNIFORM MINIMUM STANDARDS FOR DESIGN, CONSTRUCTION, AND MAINTENANCE FOR STREETS AND HIGHWAYS – LATEST EDITION ("FLORIDA GREEN BOOK").
2. CONSTRUCTION OF SIDEWALKS SHALL MEET ADA REQUIREMENTS AS SPECIFIED IN FDOT INDEX NOS. 515 AND 304.
3. POWER POLES SHALL BE MOVED WHEN POSSIBLE.
4. TREES SHALL BE TRIMMED TO MAINTAIN VERTICAL CLEARANCE: 14 FT. WITHIN ALL RIGHT–OF–WAYS.
*5. MAXIMUM LATERAL DEFLECTION SHALL BE 5:1.
6. REMOVE TREE ROOTS WITHIN 10" OF PROPOSED GRADE.
7. CONTRACTION JOINTS SHALL MEET FDOT INDEX No. 310.
8. APPLY DETAIL TO ACCOMMODATE M.H. CONFLICTS. COVERS TO BE REPLACED AS REQUIRED TO MAINTAIN FLUSH SURFACE AND PATTERN.

CITY OF TARPON SPRINGS
PINELLAS COUNTY, FLORIDA
GUIDELINES FOR SIDEWALK ALIGNMENT
DATE 12/15/15 | INDEX R-14 | SCALE N.T.S. | SHEET 1 OF 1

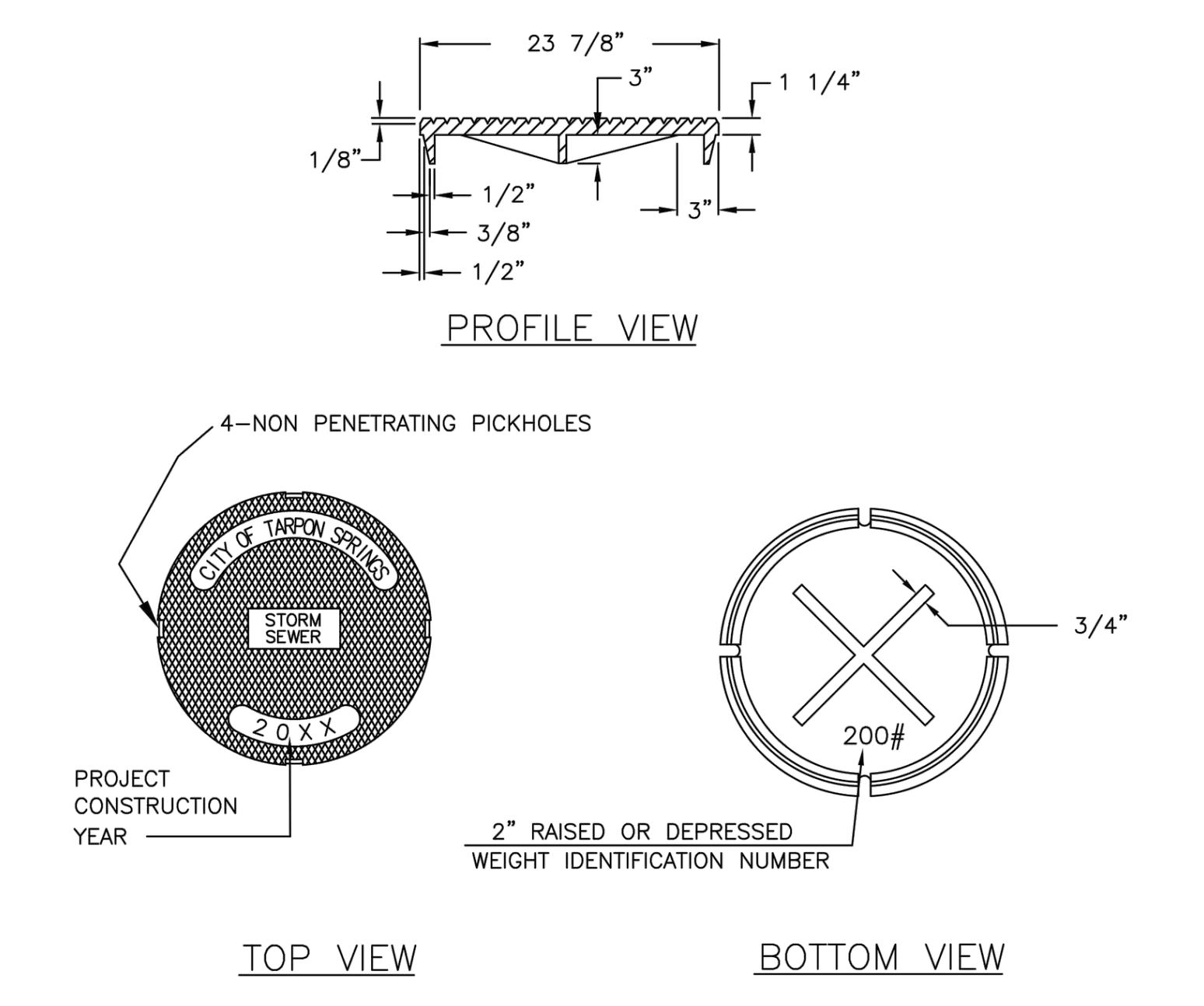

NOTES:

1. THIS COVER IS NOT TO BE USED FOR SANITARY SEWER MANHOLES.
2. THIS COVER MAY BE USED WITH FRAME TYPE I, II OR III AS DETAILED IN FDOT INDEX No. 201. THE ACTUAL FRAME TO BE USED SHALL BE AS SPECIFIED IN THE PLANS.
3. MATERIALS AND FABRICATION SHALL CONFORM TO SECTION 425 OF THE FLORIDA DEPARTMENT OF TRANSPORTATION STANDARD SPECIFICATIONS FOR ROAD AND BRIDGE CONSTRUCTION.
4. COVERS FOR UNDERDRAIN CLEANOUTS SHALL BE LABELED UNDERDRAIN AND NOT STORM SEWER.
5. COVERS SHALL BE U.S.F. TYPE X OR EQUAL. (200 LBS. MINIMUM)

CITY OF TARPON SPRINGS
PINELLAS COUNTY, FLORIDA
STORM SEWER COVER
DATE 12/15/15 | INDEX D-09 | SCALE N.T.S. | SHEET 1 OF 1

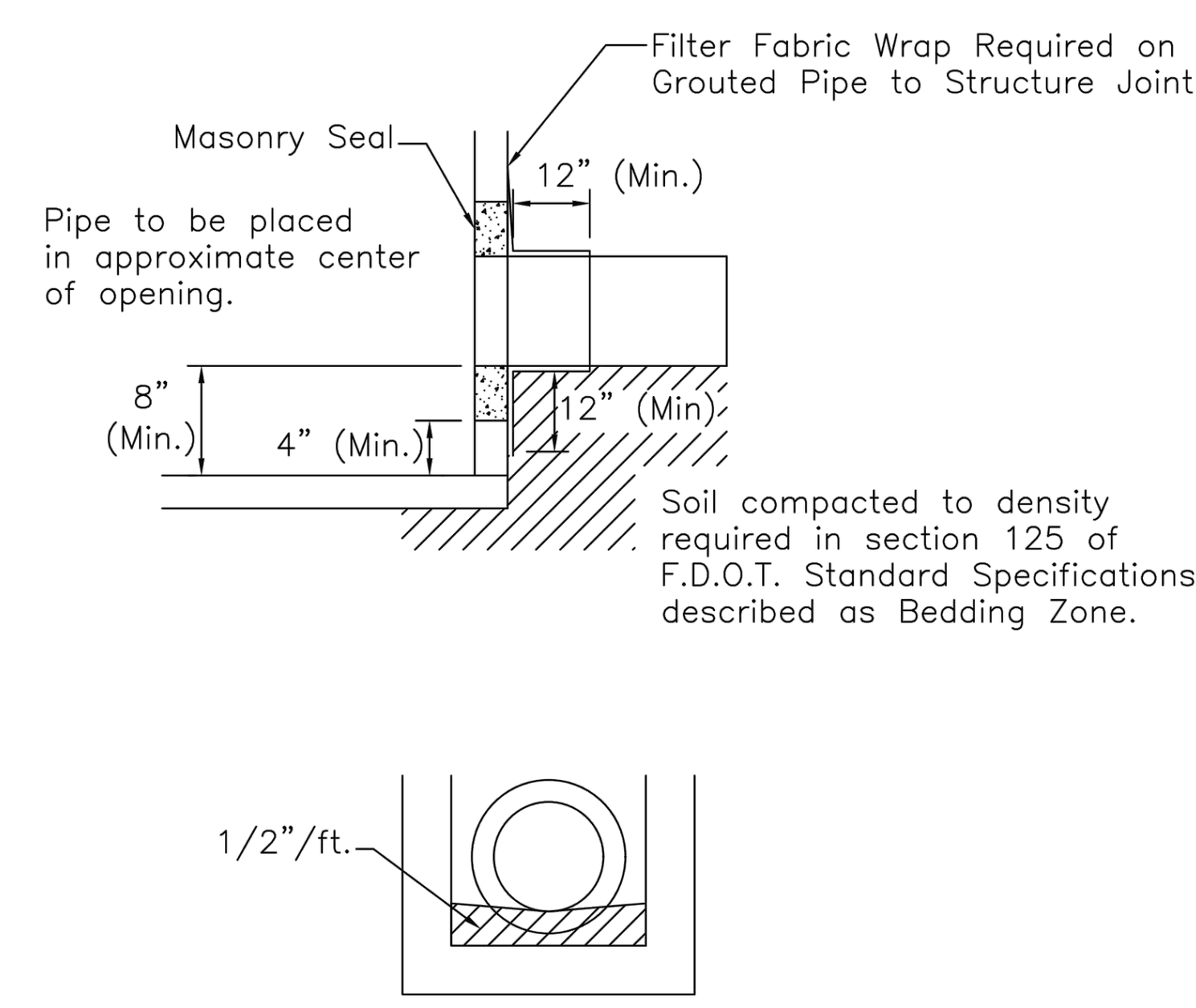

Note: Grout to consist of 3:1 Sand–Cement Mixture or any Class Concrete. FOR ALL STRUCTURES UNLESS EXCLUDED BY SPECIAL DETAIL.

CITY OF TARPON SPRINGS
PINELLAS COUNTY, FLORIDA
FILTER FABRIC WRAP AND GROUT AT STRUCTURES
DATE 12/15/15 | INDEX D-17 | SCALE N.T.S. | SHEET 1 OF 1

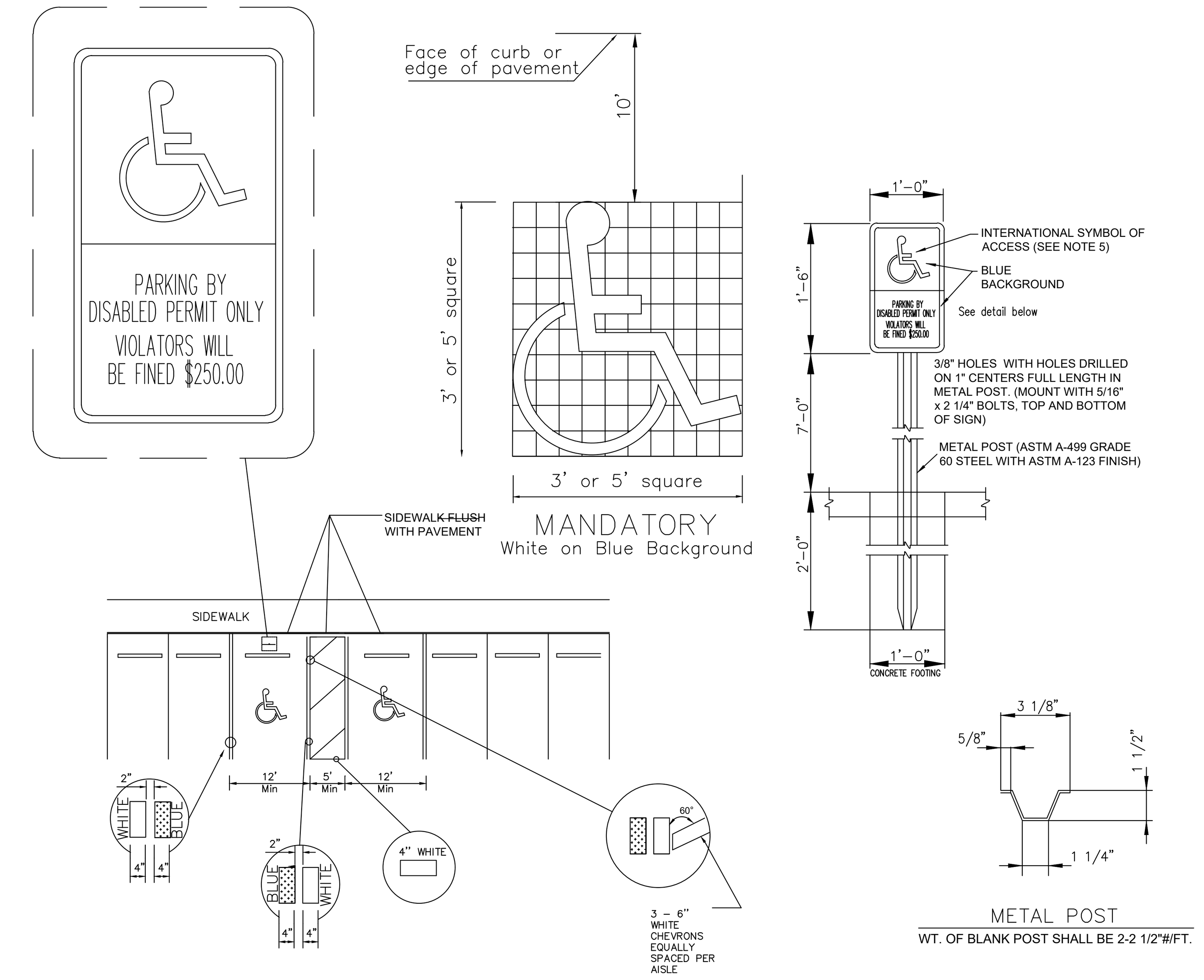

MARKING NOTES:

1. DIMENSIONS ARE TO THE CENTER LINE OF THE MARKINGS.
2. AN ACCESS AISLE IS REQUIRED FOR EACH ACCESSIBLE SPACE WHEN ANGLED PARKING IS USED.
3. CRITERIA FOR PAVEMENT MARKINGS ONLY, NOT PUBLIC SIDEWALK CURB RAMP LOCATIONS.
4. BLUE PAVEMENT MARKINGS SHALL BE TINTED TO MATCH SHADE 15180 OF FEDERAL STANDARDS 595A.
5. THE FTP-22-04 PANEL SHALL BE MOUNTED BELOW THE FTP-21-04 PANEL.

ACCESSIBLE PARKING STANDARDS PURSUANT TO FDOT DESIGN STANDARDS INDEX 17346, LATEST EDITION.
SECT. 4.6 PARKING AND PASSENGER LOADING ZONES
SECT. 4.6.2 LOCATION

* ACCESSIBLE PARKING SPACES SERVING A PARTICULAR BUILDING SHALL BE LOCATED ON THE SHORTEST SAFELY ACCESSIBLE ROUTE OF TRAVEL FROM ADJACENT PARKING TO AN ACCESSIBLE ENTRANCE.

NOTES:

1. METAL POST TO BE GALVANIZED. ALL BOLTS, NUTS, WASHERS AND SCREWS MUST BE RUSTPROOF.
2. CONCRETE FOR FOOTING SHALL USE PORTLAND CEMENT AND HAVE A MINIMUM COMPRESSIVE STRENGTH OF 3,000 PSI.
3. SIGNS WILL BE FABRICATED BY USING REFLECTING COATING IN THE SYMBOL, MESSAGE AND BORDER APPLIED TO A SHEET ALUMINUM BACKING (.080) IN THICKNESS.
4. MESSAGE LETTERING SHALL BE UPPER CASE (WHITE)(SERIES B) 2" HIGH IN ACCORDANCE WITH MANUAL ON UNIFORM TRAFFIC CONTROL DEVICES.
5. THE SYMBOL IS COMPOSED OF A WHITE WHEELCHAIR FIGURE (WHICH SHOULD ALWAYS FACE RIGHT).
6. SIGN POST SHALL BE MIN. 2'-0" CLEAR FROM BACK OF CURB.

D10 HANDICAP PARKING DETAIL
SCALE : N.T.S.

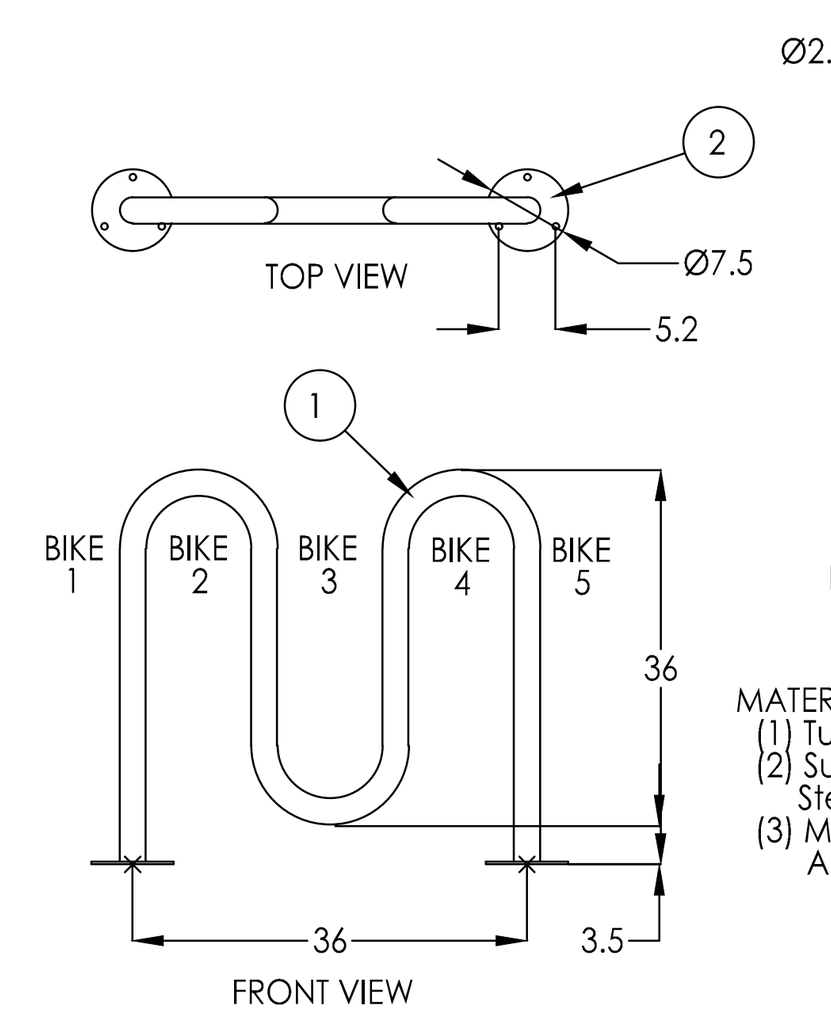

MATERIALS LIST
(1) Tubing - Ø 2 3/8" x .154" Wall Steel Tubing
(2) Surface Plate - Ø 7 1/2" x 1/4" Thick Steel Plate with Three Ø 9/16" Mounting Holes
(3) Mounted with Six Ø 1/2" x 4-5" Stainless Steel Anchor Bolts (Customer Supplied)

D11 BIKE RACK DETAIL (IN–GROUND)
SCALE : N.T.S.

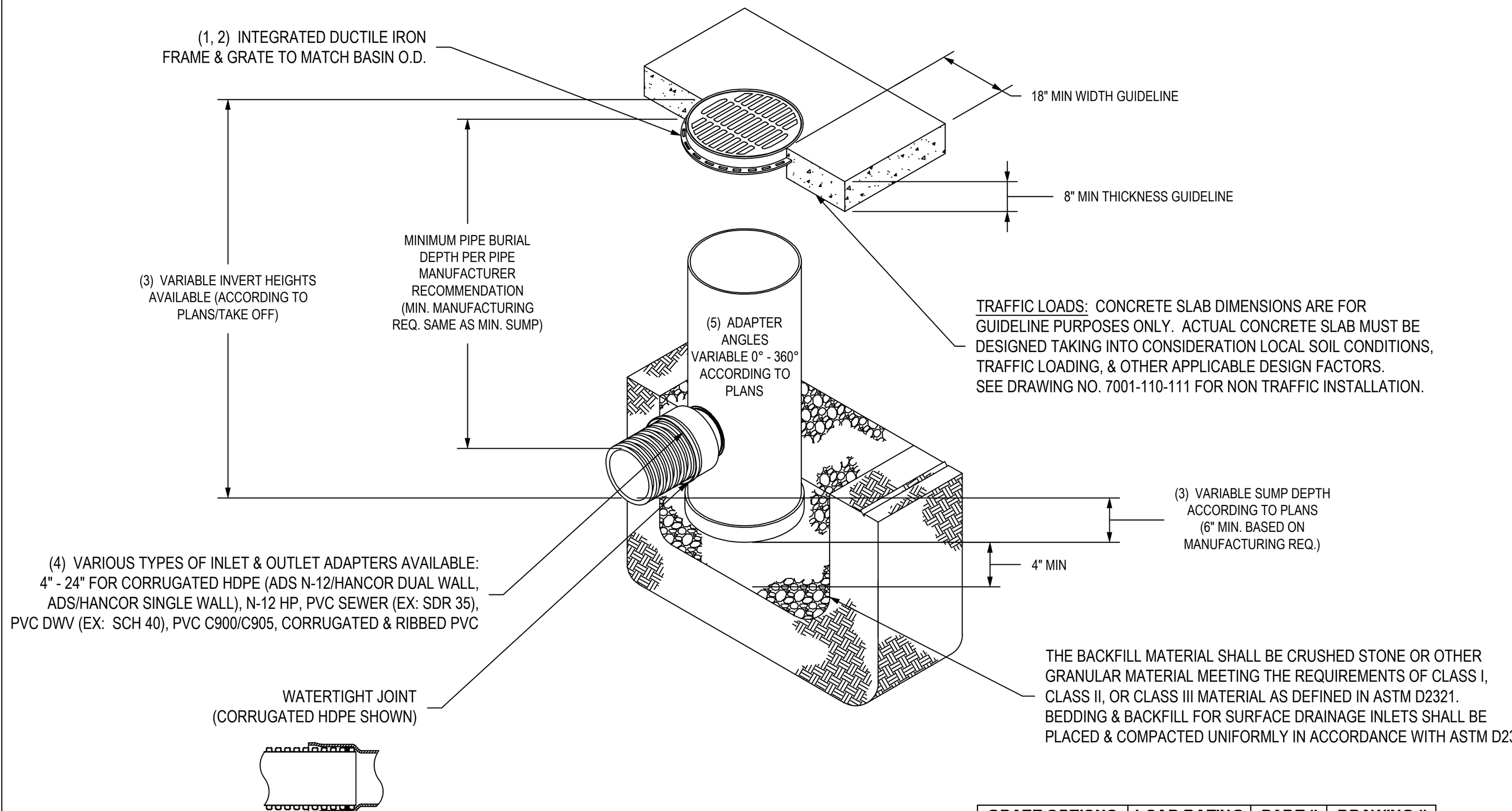

NYLOPLAST 24" DRAIN BASIN DETAIL

GRATE OPTIONS	LOAD RATING	PART #	DRAWING #
PEDESTRIAN	MEETS H-10	2499CGP	7001-110-216
STANDARD	MEETS H-20	2499CGS	7001-110-217
SOLID COVER	MEETS H-20	2499CGC	7001-110-218
DOME	N/A	2499CGD	7001-110-219
DROP IN GRATE	LIGHT DUTY	2401DI	7001-110-075

D12 NYLOPLAST 24" DRAIN BASIN DETAIL
SCALE : N.T.S.

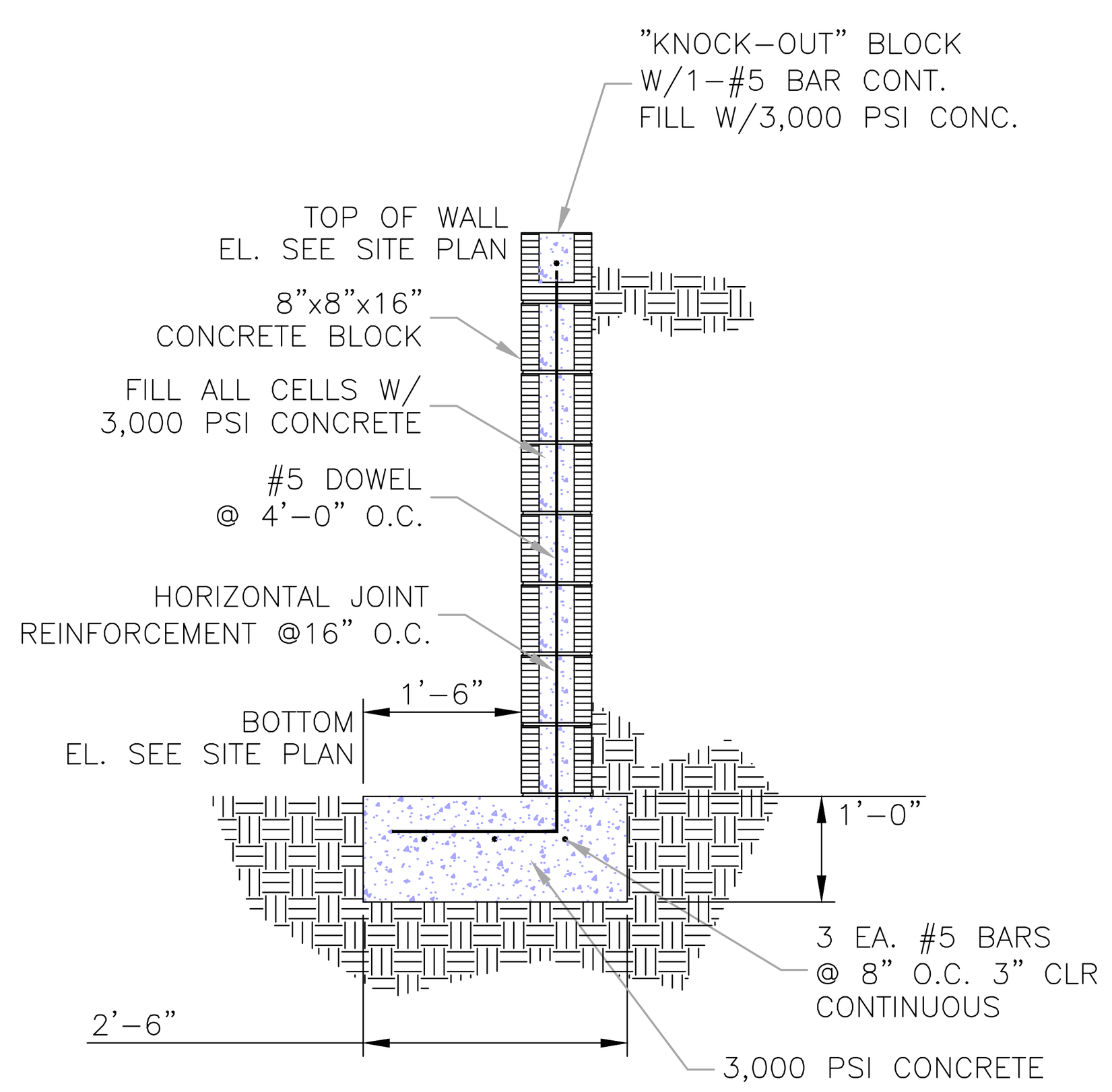

NON-BEARING CONCRETE WALL DETAIL
N.T.S.

NOTE:
FURTHER EVALUATION BEFORE WALL CONSTRUCTION REQUIRED. A SUBSTITUTE ALTERNATIVE ANCHOR WALL OR SIMILAR IS ACCEPTABLE WITH OWNER / OWNER REPRESENTATIVE APPROVAL.

D13 NON–BEARING CONCRETE WALL DETAIL
SCALE : N.T.S.

Scale: N.T.S.

CONTRACTOR SHALL CONTACT SUNSHINE STATE ONE–CALL OF FLORIDA, INC. FOR LOCATION OF ALL UTILITIES TWO COMPLETE BUSINESS DAYS PRIOR TO BEGINNING CONSTRUCTION.
Know what's below. Call before you dig.

No.	Date	Revision - Description
1	06-28-2022	REVISED AS PER COUNTY COMMENTS
2	03-04-2023	REVISED AS PER COUNTY COMMENTS
3		
4		
5		
6		
7		

SYCAMORE ENGINEERING, INC.
• Civil Engineering • Surveying & Mapping • Land Planning • Construction Management • Landscape Architecture
8370 W. Hillsborough Ave., Suite 205
Tampa, FL 33615
Phone: 813.889.0700
Fax: 813.889.0788
e:mail: greatteam@sycamoreeng.com
F.L. C.A. # 9485 & L.B. # 7961

Project Title: THE SHOPPES AT MERES
Project Location: 1098 SOUTH PINELLAS AVENUE TARPON SPRINGS, FL 33689
Sheet Title: GENERAL DETAILS SHEET

J.D. ALSABBAGH LICENSE NO. 58995 STATE OF FLORIDA PROFESSIONAL ENGINEER
Digitally signed by Jhad D Sabbagh Date: 2025.05.07 16:02:59 -04'00'
J.D. ALSABBAGH. P.E.
FL P.E. #58995

Job No.	J0308
Drawn by:	FHG
Approved by:	JDA
Date:	04-16-2024

Sheet No.
C-9

THE DESIGN AND IDEAS INCORPORATED HEREIN, AS AN INSTRUMENT OF PROFESSIONAL SERVICE IS PROPERTY OF SYCAMORE ENGINEERING, INC. DIMENSIONS SHOULD NOT BE OBTAINED BY USING SCALING OF THE PLAN. DIMENSIONS CAN BE OBTAINED BY CONTACTING SYCAMORE ENGINEERING, INC. DIRECTLY. © 2024
THE USE OF THIS DRAWING WITHOUT WRITTEN AUTHORIZATION FROM SYCAMORE ENGINEERING, INC. IT CAN NOT BE USED OR COPIED FOR ANY OTHER PROJECT WITHOUT WRITTEN AUTHORIZATION FROM SYCAMORE ENGINEERING, INC.

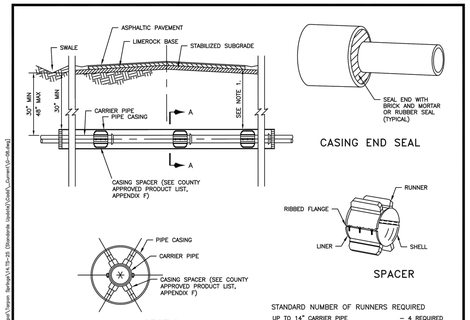

STANDARD NUMBER OF RUNNERS REQUIRED

UP TO 14" CARRIER PIPE	– 4 REQUIRED
OVER 14" THROUGH 36" CARRIER PIPE	– 6 REQUIRED
OVER 36" THROUGH 48" CARRIER PIPE	– 7 REQUIRED

NOTES:

1. UNDERGROUND CROSSINGS REQUIRE A MINIMUM VERTICAL CLEARANCE OF 48" BELOW PAVEMENT SURFACE FOR FREEWAYS, 36" FOR OTHER HIGHWAYS AND SUBAQUEOUS CROSSINGS OR 30" BELOW UNPAVED GROUND INCLUDING DITCH GRADE PER FLORIDA D.O.T.
2. SEE TECHNICAL SPECIFICATIONS FOR CARRIER PIPE AND CASING PIPE REQUIREMENTS.

STAINLESS STEEL SPACERS:

1. SPACERS SHALL BE BOLT–ON STYLE WITH A TWO PIECE SOLID SHELL MADE FROM T–304 STAINLESS STEEL OF A MINIMUM 14 GAUGE THICKNESS. THE SHELL SHALL BE LINED WITH A RIBBED PVC SHEET OF A 0.090" THICKNESS THAT OVERLAPS THE EDGES. RUNNERS MADE FROM UHMW POLYMER SHALL BE ATTACHED TO RISERS AT APPROPRIATE POSITIONS TO PROPERLY LOCATE THE CARRIER WITHIN THE CASING AND TO EASE INSTALLATION. RISERS SHALL BE MADE FROM T–304 STAINLESS STEEL OF A MINIMUM 14 GAUGE THICKNESS AND SHALL BE ATTACHED TO THE SHELL BY MIG WELDING. ALL WELDS SHALL BE FULLY PASSIVATED. ALL FASTENERS SHALL BE MADE FROM T–304 STAINLESS STEEL. CASING SPACERS (SEE COUNTY APPROVED PRODUCT LIST, APPENDIX F).

PLACEMENT OF SPACERS ON CARRIER PIPE:

1. GENERAL – ONE SPACER SHALL BE PLACED NOT MORE THAN TWO FEET FROM EACH END OF CASING. SUBSEQUENT SPACERS SHALL BE PLACED AT 6' TO 10' INTERVALS WITHIN THE CASING, OR IN ACCORDANCE WITH PIPE MANUFACTURER'S RECOMMENDATIONS.
2. PVC CARRIER – ONE SPACER SHALL BE PLACED ON THE SPIGOT END OF EACH SEGMENT AT THE LINE MARKING THE LIMIT OF INSERTION INTO THE BELL. WHEN THE JOINT IS COMPLETE, THE SPACER SHALL BE IN CONTACT WITH THE BELL OF THE JOINT SO THAT THE SPACER PUSHES THE JOINT AND RELIEVES COMPRESSION WITHIN THE JOINT. SUBSEQUENT SPACERS SHALL BE PLACED AT 6' TO 10' INTERVALS IN ACCORDANCE WITH MANUFACTURER'S RECOMMENDATIONS.

CARRIER PIPE:

1. CARRIER PIPE SHALL BE CENTERED WITHIN CASING BY USE OF STAINLESS STEEL CASING SPACERS (SEE COUNTY APPROVED PRODUCT LIST, APPENDIX F).

CITY OF TARPON SPRINGS, PINELLAS COUNTY, FLORIDA	JACK AND BORE DETAIL	DATE 12/15/15 · INDEX G-08 · SCALE N.T.S. · SHEET 1 OF 1

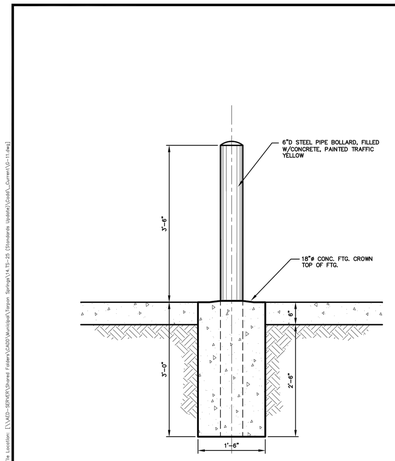

CITY OF TARPON SPRINGS, PINELLAS COUNTY, FLORIDA	BOLLARD DETAIL	DATE 1/4/17 · INDEX G-11 · SCALE 3/4"=1'-0" · SHEET 1 OF 1

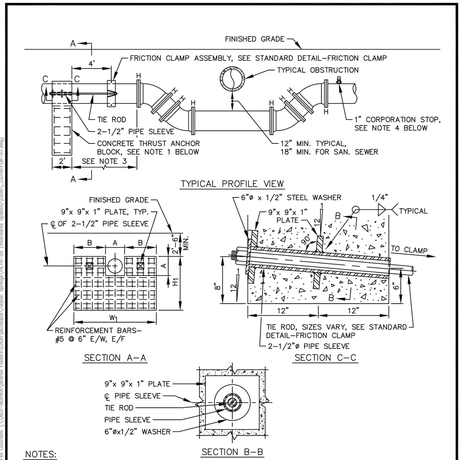

NOTES:

1. CONCRETE THRUST ANCHOR BLOCK SHALL BE USED ON BOTH SIDES OF OBSTRUCTION.
2. H = HARNESSED JOINT: MJ W/DI RETAINER GLAND.
3. HARNESS ALL JOINTS WITH–IN 20' OF THRUST ANCHOR BLOCK.
4. PROVIDE AIR RELEASE VALVE ON LOWEST SIDE.
5. ALL BOLTS, WASHERS, RODS, PLATES, PIPE SLEEVES, AND FRICTION CLAMP ASSEMBLIES SHALL BE HOT DIPPED GALVANIZED PRIOR TO INSTALLATION.
6. THE CONTRACTOR SHALL NOTIFY ALL AFFECTED CITY CUSTOMERS PRIOR TO SHUTDOWN.
7. FOR ADDITIONAL NOTES, SEE STANDARD DETAIL–FRICTION CLAMP.

CITY OF TARPON SPRINGS, PINELLAS COUNTY, FLORIDA	THRUST ANCHOR BLOCK FOR VERTICAL BENDS DETAIL	DATE 12/15/15 · INDEX W-07 · SCALE N.T.S. · SHEET 1 OF 1

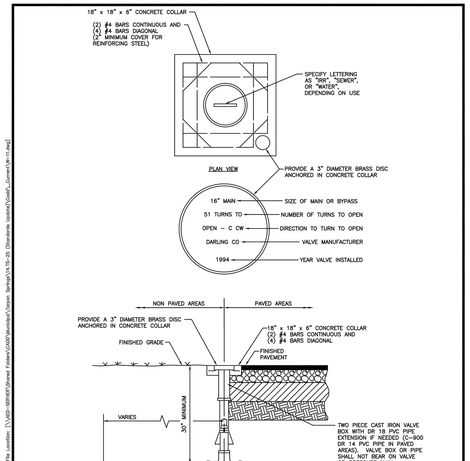

CITY OF TARPON SPRINGS, PINELLAS COUNTY, FLORIDA	TYPICAL VALVE SETTING DETAIL	DATE 12/15/15 · INDEX W-11 · SCALE N.T.S. · SHEET 1 OF 1

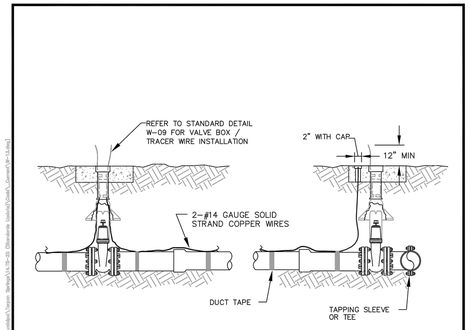

NOTES

1. USE 2. #14 GAUGE, SOLID COPPER STRAND WIRE WITH COLOR CODED INSULATION PER SERVICE.
2. THERE IS TO BE SUFFICIENT SLACK IN TRACER WIRE TO EXTEND A MIN. OF 12" ABOVE VALVE BOX.
3. WIRE IS TO CONTINUE THROUGH TEES ON MAIN LINE WHERE NO VALVES EXIST.
4. ATTACH WIRE TO TOP CENTER LINE OF MAIN USING DUCT TAPE OR APPROVED EQUAL @ 5'– 0" INTERVALS.
5. DUMMY BOXES ARE TO BE INSTALLED WHERE NEW CONSTRUCTION TIES INTO EXISTING, AND ON FIRE LINES WITH DOUBLE CHECK VALVE ASSEMBLIES WHERE MAIN ENTERS BUILDING IF NO VALVE IS INSTALLED.
6. DUMMY BOXES ARE TO CONSIST OF A TOP SECTION OF A VALVE BOX ASSEMBLY ENCASED IN A CONCRETE PAD PER STANDARD DETAIL W–05.

CITY OF TARPON SPRINGS, PINELLAS COUNTY, FLORIDA	TRACER WIRE INSTALLATION	DATE 12/15/15 · INDEX W-13 · SCALE N.T.S. · SHEET 1 OF 1

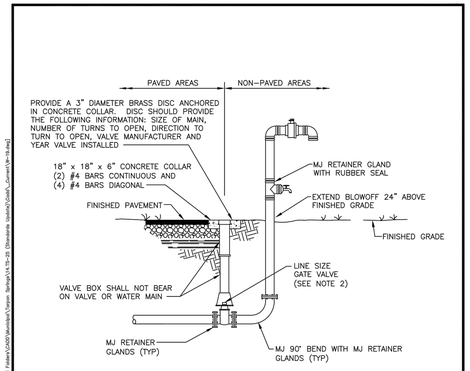

SIDE VIEW

NOTES:

1. MJ TAPPED CAP WITH HOSE BIBB IS TO BE REMOVED AFTER INITIAL BACTERIOLOGICAL CLEARANCE AND PRIOR TO WATER MAIN ACCEPTANCE.
2. SEE TECHNICAL SPECIFICATIONS SECTION 331200 FOR GATE VALVE AND VALVE BOX REQUIREMENTS.
3. ALL COMPONENTS THAT COME INTO CONTACT WITH DRINKING WATER SHALL CONFORM TO NSF STANDARD 61.

CITY OF TARPON SPRINGS, PINELLAS COUNTY, FLORIDA	TEMPORARY BLOWOFF ASSEMBLY WITH BACTERIAL SAMPLE POINT DETAIL	DATE 12/15/15 · INDEX W-19 · SCALE N.T.S. · SHEET 1 OF 1

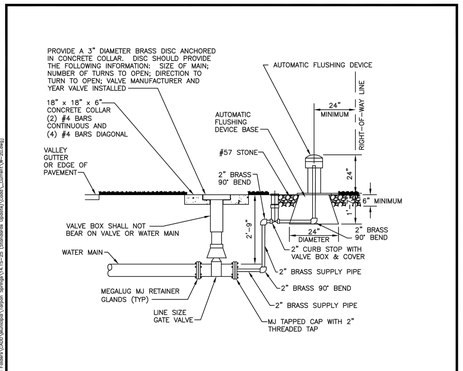

NOTES:

1. PIPING SHALL BE INSTALLED UP TO 2" CURB STOP WITH VALVE BOX AND COVER AT TIME OF MAIN INSTALLATION.
2. AUTOMATIC FLUSHING DEVICE SHALL BE SHUT OFF UNTIL MAIN LINE HAS BEEN BACTERIOLOGICALLY TESTED.
3. ALL THREAD HARD PIPING SHALL BE BRASS.
4. CITY OF TARPON SPRINGS TECHNICAL SPECIFICATIONS SECTION 331200 FOR GATE VALVE AND VALVE BOX REQUIREMENTS.
5. AT TIME OF ACCEPTANCE, WATER DEPARTMENT WILL INSTALL 2" METER.
6. ALL COMPONENTS THAT COME INTO CONTACT WITH DRINKING WATER SHALL CONFORM TO NSF STANDARD 61.

CITY OF TARPON SPRINGS, PINELLAS COUNTY, FLORIDA	AUTOMATIC WATER MAIN FLUSHING DEVICE DETAIL	DATE 12/15/15 · INDEX W-20 · SCALE N.T.S. · SHEET 1 OF 1

NOTES:

1. ALL BOLTED FITTINGS ARE TO BE POLYETHYLENE WRAPPED, COLOR CODED PER SERVICE.
2. IF FIRE HYDRANT IS TO BE LOCATED WITHIN 10 FT. OR LESS OF A VEHICULAR TRAVELED AREA, GUARD POSTS MAY BE REQUIRED UNLESS OTHERWISE APPROVED BY CITY OF TARPON SPRINGS ENGINEERING OR THEIR AUTHORIZED REPRESENTATIVE.
3. IF DISTANCE BETWEEN VALVE AND HYDRANT IS 10 FT. OR GREATER, AN ADDITIONAL VALVE IS TO BE INSTALLED FOR CONTROL OF HYDRANT UNLESS OTHERWISE APPROVED BY CITY OF TARPON SPRINGS ENGINEERING OR THEIR APPROVED REPRESENTATIVE.
4. HYDRANT IS TO BE INSTALLED PLUMB.
5. HYDRANT TO BE PAINTED UPON INSTALLATION PER CITY OF TARPON SPRINGS APPROVED PRODUCTS AND COLORS.

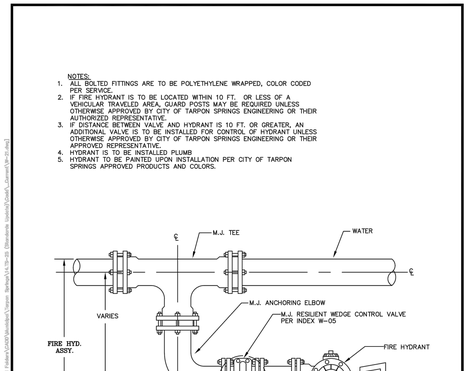

1. TEE MAY BE ROTATED TO OBTAIN PROPER BURY ON FIRE HYD.
2. ANCHORING ELBOW MAY BE SWITCHED (LONG vs. SHORT END) AND ROTATED TO SET FIRE HYD. IN OPPOSITE DIRECTION.
3. ANCHORING COUPLINGS MAY BE REPLACED WITH RESTRAINED PIPE (1' TO 10').

CITY OF TARPON SPRINGS, PINELLAS COUNTY, FLORIDA	PARALLEL FIRE HYDRANT	DATE 12/15/15 · INDEX W-21 · SCALE N.T.S. · SHEET 1 OF 1

0 0 0
Scale: N.T.S.

CONTRACTOR SHALL CONTACT SUNSHINE STATE ONE–CALL OF FLORIDA, INC. FOR LOCATION OF ALL UTILITIES TWO COMPLETE BUSINESS DAYS PRIOR TO BEGINNING CONSTRUCTION.
811 Know what's below. Call before you dig.

No.	Date	Revision - Description
1	08-26-2022	REVISED AS PER COUNTY COMMENTS

SYCAMORE ENGINEERING, INC.
• Civil Engineering • Land Planning • Land Planning Mapping • Construction Management • Landscape Architecture
8379 W. Hillsborough Ave., Suite 205, Tampa, FL 33615
Phone: 813.889.0700
Fax: 813.889.0788
email: gwelfeam@sycamoreeng.com
FL. C.A. # 9485 & L.B. # 7961

Project Title: THE SHOPPES AT MERES
Project Location: 1098 SOUTH PINELLAS AVENUE TARPON SPRINGS, FL 33689
Sheet Title: UTILITY DETAILS SHEET

J. D. ALSABAUGH LICENSED PROFESSIONAL ENGINEER STATE OF FLORIDA
Digitally signed by Jnad D Salbagh
NO. 58995
Date: 2024.05.07 16:03:26 -04'00'
J.D. ALSABAUGH, P.E.
FL P.E. #58995

Job No.	J0308
Drawn by:	FHG
Approved by:	JDA
Date:	04-16-2024

Sheet No.
C-10

THE DESIGN AND IDEAS INCORPORATED HEREIN, AS AN INSTRUMENT OF PROFESSIONAL SERVICE IS PROPERTY OF SYCAMORE ENGINEERING, INC. DIMENSIONS SHOULD NOT BE OBTAINED BY USING SCALING OF THE PLAN. DIMENSIONS CAN BE OBTAINED BY CONTACTING SYCAMORE ENGINEERING, INC. DIRECTLY. © 2024
THIS PLAN IS NOT TO BE REPRODUCED, COPIED OR USED IN ANY WAY WHATSOEVER, NOR ARE THEY TO BE ASSIGNED TO ANY THIRD PARTY, WITHOUT FIRST OBTAINING THE EXPRESS WRITTEN AUTHORIZATION FROM SYCAMORE ENGINEERING, INC.

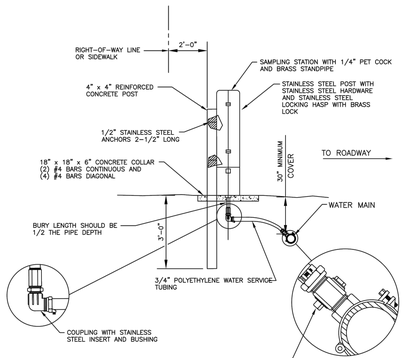

SIDE VIEW

CITY OF TARPON SPRINGS PINELLAS COUNTY, FLORIDA	PERMANENT BACTERIAL SAMPLE POINT DETAIL	DATE 12/15/15 INDEX W-26 SCALE N.T.S. SHEET 1 OF 1

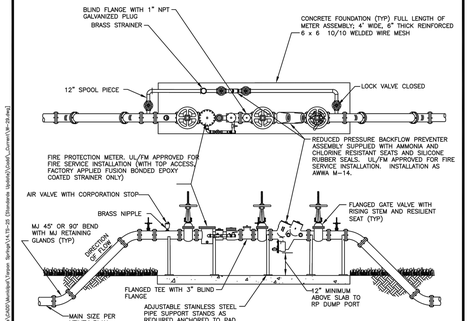

NOTES:

1. ALL ABOVE GROUND PIPE WILL HAVE FLANGED END DUCTILE IRON PIPE, PRESSURE CLASS 350. ALL NUTS AND BOLTS SHALL BE STAINLESS STEEL.
2. (4) VEHICULAR GUARD POSTS TO BE INSTALLED AROUND METER. CONFIGURATION TO BE ILLUSTRATED ON CONSTRUCTION DOCUMENTS SUBMITTED FOR REVIEW AND APPROVAL.
3. THIS ASSEMBLY IS PERMITTED FOR COMBINATION FIRE AND POTABLE WATER SERVICE.
4. AS THIS UNIT WILL REQUIRE PERIODIC TESTING, FACILITIES REQUIRING CONTINUOUS WATER SERVICE SHALL PROVIDE PARALLEL UNITS OR FULL SIZE BYPASSES TO PREVENT SERVICE INTERRUPTIONS.
5. BACKFLOW DEVICE REQUIRES INITIAL CERTIFICATION BY AN APPROVED CERTIFIED TESTER.
6. CITY OF TARPON SPRINGS REQUIRES DEDICATION OF ALL ABOVE GROUND MATERIAL AND EQUIPMENT FROM THE METER ASSEMBLY BACK TO THE CITY OF TARPON SPRINGS MAIN.
7. ALL PLANTING SHALL BE A MINIMUM OF 1.5' FROM THE EDGE OF SLAB, AND SHALL PROVIDE A 3' ACCESS OPENING.
8. STRAINER SHALL HAVE FUSION-BONDED EPOXY COATING.
9. ALL COMPONENTS THAT COME INTO CONTACT WITH DRINKING WATER SHALL CONFORM TO NSF STANDARD 61.

CITY OF TARPON SPRINGS PINELLAS COUNTY, FLORIDA	3" AND OVER POTABLE WATER FIRE AND DOMESTIC METER ASSEMBLY DETAIL	DATE 12/15/15 INDEX W-29 SCALE N.T.S. SHEET 1 OF 1

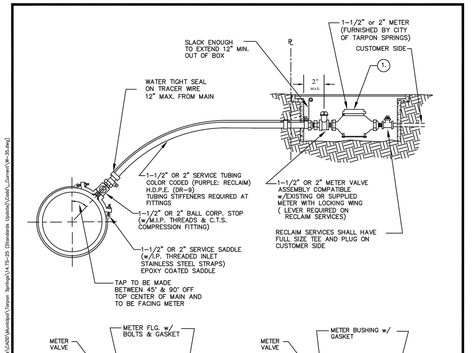

NOTES:

1. ALL CORPORATION STOPS TO BE FOR USE WITH DR 9 (C.T.S.) H.D.P.E. TUBING.
2. SERVICE SADDLE REQUIRED FOR ALL TAPS.
3. METER ONLY, TO BE FURNISHED BY CITY OF TARPON SPRINGS.
4. METER BOXES SHALL BE PER CITY OF TARPON SPRINGS APPROVED MATERIAL SPECIFICATIONS.(ALL RECLAIMED BOXES SHALL HAVE LOCKING LIDS)
5. ALL METER BOXES LOCATED WITHIN VEHICULAR TRAVEL AREAS SHALL BE H-20 LOADING. ALL OTHERS SHALL BE H-10 LOADING.
6. TRACER WIRE ONLY REQUIRED ON SERVICES OVER 40' IN LENGTH.

***W-19, POTABLE WATER IS ABOVE GROUND**

CITY OF TARPON SPRINGS PINELLAS COUNTY, FLORIDA	1½" OR 2" METERED RECLAIM WATER * SERVICE CONNECTION	DATE 12/15/15 INDEX W-35 SCALE N.T.S. SHEET 1 OF 1

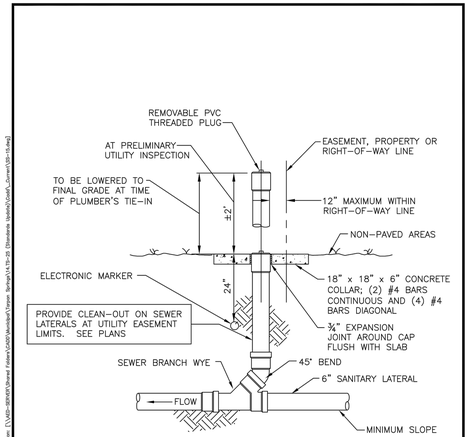

ELEVATION

CITY OF TARPON SPRINGS PINELLAS COUNTY, FLORIDA	SEWER CLEAN-OUT DETAIL NON PAVED AREAS	DATE 12/15/15 INDEX SS-15 SCALE N.T.S. SHEET 1 OF 1

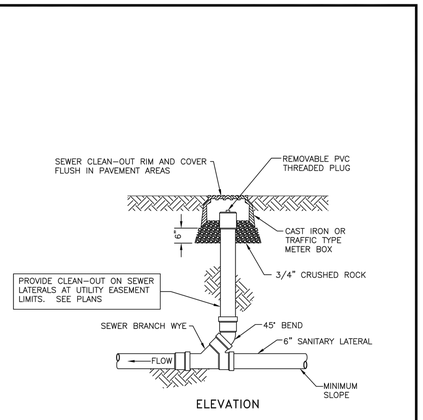

ELEVATION

CITY OF TARPON SPRINGS PINELLAS COUNTY, FLORIDA	SEWER CLEAN-OUT DETAIL PAVED AREAS	DATE 12/15/15 INDEX SS-16 SCALE N.T.S. SHEET 1 OF 1

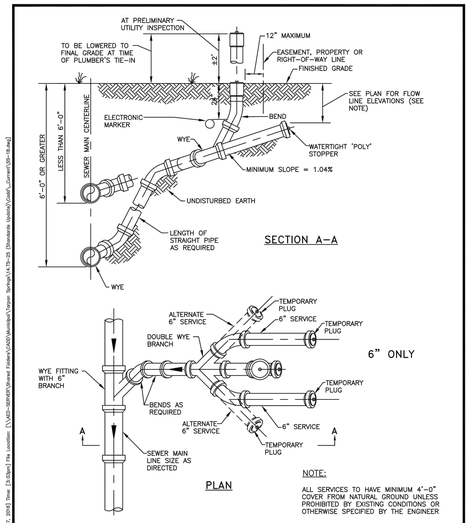

NOTE:
ALL SERVICES TO HAVE MINIMUM 4'-0" COVER FROM NATURAL GROUND UNLESS PROHIBITED BY EXISTING CONDITIONS OR OTHERWISE SPECIFIED BY THE ENGINEER

DOUBLE SEWER CLEAN-OUT DETAIL
NTS

CITY OF TARPON SPRINGS PINELLAS COUNTY, FLORIDA	DOUBLE SEWER CLEAN-OUT DETAIL	DATE 12/15/15 INDEX SS-18 SCALE N.T.S. SHEET 1 OF 1

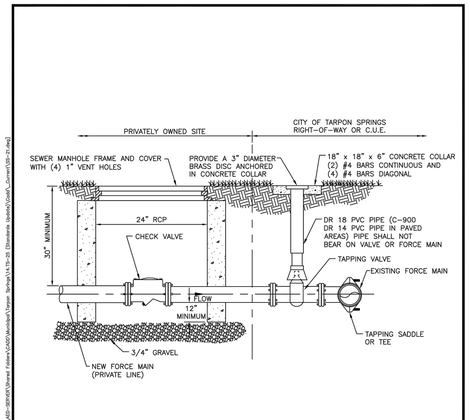

CITY OF TARPON SPRINGS PINELLAS COUNTY, FLORIDA	PRIVATE FORCE MAIN CONNECTION TO CITY FORCE MAIN	DATE 12/15/15 INDEX SS-21 SCALE N.T.S. SHEET 1 OF 1

0 0 0
Scale: N.T.S.

CONTRACTOR SHALL CONTACT SUNSHINE STATE ONE-CALL OF FLORIDA, INC. FOR LOCATION OF ALL UTILITIES TWO COMPLETE BUSINESS DAYS PRIOR TO BEGINNING CONSTRUCTION.
811 Know what's below. Call before you dig.

No.	Date	Revision - Description
1	06-28-2022	REVISED AS PER COUNTY COMMENTS

SYCAMORE ENGINEERING, INC.
• Civil Engineering • Water Resources • Land Planning • Construction Management • Landscape Architecture
8370 W. Hillsborough Ave., Suite 265
Tampa, FL 33615
Phone: 813.889.0700
Fax: 813.880.0768
email: questions@sycamoreeng.com
FL. C.A. # 9885 & L.B. # 7961

Project Title: THE SHOPPES AT MERES
Project Location: 1098 SOUTH PINELLAS AVENUE TARPON SPRINGS, FL 33689
Sheet Title: UTILITY DETAILS SHEET

J. D. ALSABAGH LICENSE NO. 58995 STATE OF FLORIDA PROFESSIONAL ENGINEER
Digitally signed by Jihad D Sabbagh
Date: 2025.05.07 16:03:53 -04'00'
J.D. ALSABAGH, P.E. FL P.E. #58995

Job No.	J0308
Drawn by:	FHG
Approved by:	JDA
Date:	04-16-2024

Sheet No.
C-10A

THE DESIGN AND IDEAS INCORPORATED HEREIN, AS AN INSTRUMENT OF PROFESSIONAL SERVICE IS PROPERTY OF SYCAMORE ENGINEERING, INC. DIMENSIONS SHOULD NOT BE OBTAINED BY USING SCALING OF THE PLAN. DIMENSIONS CAN BE OBTAINED BY CONTACTING SYCAMORE ENGINEERING, INC. DIRECTLY. © 2024

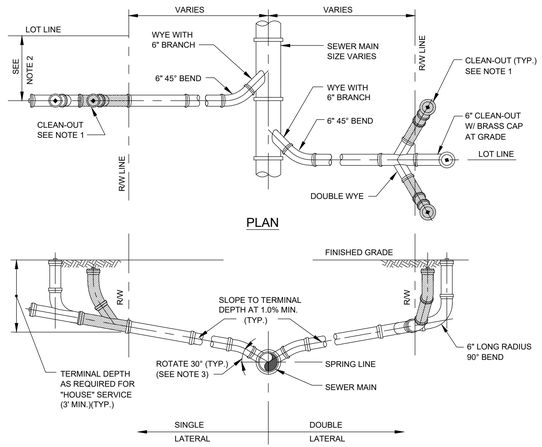

NOTES:

1. ELDER VALVE CLEAN-OUT (SHOWN SHADED) SHALL BE INSTALLED BY THE BUILDER IN ACCORDANCE WITH STANDARD PLUMBING CODE.
2. LOCATE SINGLE LATERAL AS CLOSE TO LOT LINE AS POSSIBLE, 25' MAXIMUM.
3. INVERT OF SERVICE LATERAL SHALL NOT ENTER SEWER MAIN BELOW SPRING LINE.
4. WYE BRANCH CONNECTIONS ON DOUBLE SERVICE CONNECTIONS TO BE CAPPED WITH REMOVABLE STOPPER AND SEALED WITH JOINT COMPOUND.
5. SERVICE LINES SHALL BE EXTENDED 18" ABOVE GRADE PRIOR TO VIDEOTAPING THE SANITARY SYSTEM. UPON ACCEPTANCE BY THE UTILITY, THE CONTRACTOR SHALL CUT THE CLEANOUT TO FINISHED GRADE AND THE SERVICE CONNECTIONS TO WITHIN 3 FEET OF FINISHED GRADE.

SANITARY SERVICE LATERAL DETAIL

N.T.S.

	SCALE: NONE	SANITARY DETAILS	STANDARD DETAIL NUMBER
	DATE: 6-3-02	SANITARY SERVICE LATERAL DETAIL	S-5
	FILE: SANLAT.DWG		

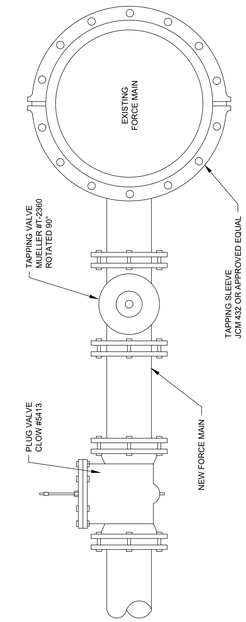

CONNECTION DETAIL NEW FORCE MAIN TO EXISTING

N.T.S.

	SCALE: NONE	SANITARY DETAILS	STANDARD DETAIL NUMBER
	DATE: 6-3-02	CONNECTION DETAIL NEW FORCE MAIN TO EXISTING	S-17
	FILE: FMCONN.DWG		

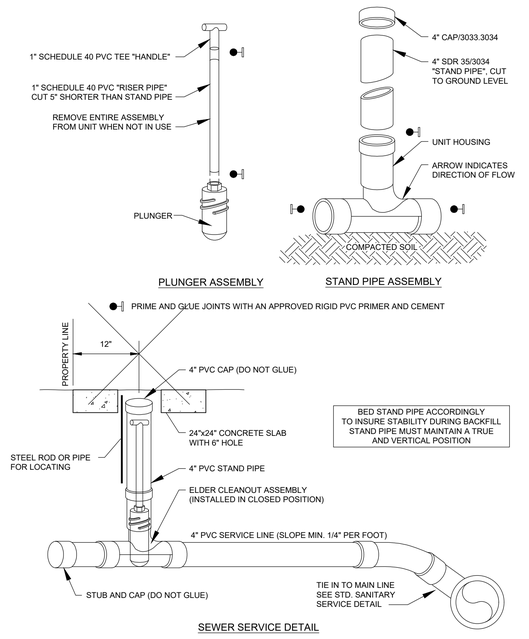

ELDER CLEANOUT ASSEMBLY

N.T.S.

	SCALE: NONE	SANITARY DETAILS	STANDARD DETAIL NUMBER
	DATE: 7-12-01	ELDER CLEANOUT ASSEMBLY	S-6
	FILE: ELDER.DWG		

Scale: N.T.S.

CONTRACTOR SHALL CONTACT SUNSHINE STATE ONE-CALL OF FLORIDA, INC. FOR LOCATION OF ALL UTILITIES TWO COMPLETE BUSINESS DAYS PRIOR TO BEGINNING CONSTRUCTION.

Know what's below. Call before you dig.

No.	Date	Revision - Description
1	06-28-2022	REVISED AS PER COUNTY COMMENTS

SYCAMORE ENGINEERING, INC.
• Civil Engineering
• Surveying & Mapping
• Land Planning
• Construction Management
• Landscape Architecture
8370 W. Hillsborough Ave., Suite 265
Tampa, FL 33615
Phone: 813.889.0700
Fax: 813.889.0788
email: gcrittenden@sycamoreeng.com
FL. C.A. # 9855 & L.B. # 7961

Project Title: THE SHOPPES AT MERES

Project Location: 1098 SOUTH PINELLAS AVENUE TARPON SPRINGS, FL 33689

Sheet Title: UTILITY DETAILS SHEET

ALABBAGH LICENSE NO. 58995 STATE OF FLORIDA PROFESSIONAL ENGINEER J.D. ALABBAGH, P.E. FL P.E. #58995

Digitally signed by Jihad D Sabbagh
Date: 2025.05.07 16:04:24 -04'00'

Job No.	J0308
Drawn by:	FHG
Approved by:	JDA
Date:	04-16-2024

Sheet No.
C-10B

GENERAL

THE GENERAL CONTRACTOR SHALL REVIEW AND DETERMINE THAT ALL DIMENSIONS ARE COORDINATED BETWEEN THE ARCHITECTURAL AND STRUCTURAL DRAWINGS PRIOR TO COMMENCING WITH THE FABRICATION OF MATERIALS OR THE START OF CONSTRUCTION.

THE GENERAL CONTRACTOR SHALL TAKE ALL NECESSARY STEPS TO PROTECT THE STRUCTURE, THE WORK PERSONS, AND OTHER PEOPLE DURING CONSTRUCTION. HE SHALL SUPERVISE AND DIRECT THE WORK AND BE RESPONSIBLE FOR ALL CONSTRUCTION.

NO STRUCTURAL MEMBER SHALL BE CUT, NOTCHED OR OTHERWISE REDUCED IN STRENGTH.

THE GENERAL CONTRACTOR SHALL COORDINATE ALL DESIGN PROFESSIONALS DRAWINGS AND SPECIFICATIONS, FOR ITEMS WHICH MAY ADVERSELY AFFECT THE STRUCTURE AND NOTIFY THE ARCHITECT/ENGINEER OF ANY DISCREPANCIES AND/OR OMISSIONS.

SUBMITTAL SETS SHALL CONSIST OF A MAXIMUM OF 1 SEPIA AND 2 BLUE LINES, ADDITIONAL BLUE LINES WILL BE DISCARDED.

SUBMITTALS TO ENGINEER OF RECORD FOR REVIEW MUST CONTAIN THE GENERAL CONTRACTOR'S STAMP SIGNIFYING HIS REVIEW/ACCEPTANCE. SUBMITTALS SENT WITHOUT THE GS'S REVIEW STAMP WILL BE RETURNED AT HIS EXPENSE AND WITHOUT REVIEW.

ALL SECTIONS AND DETAILS SHALL BE CONSIDERED TO BE TYPICAL OR SIMILAR UNLESS ANOTHER SECTION OR DETAIL IS REFERENCED ON THE PLANS.

FOUNDATIONS

CONFORMANCE WITH THE REQUIREMENTS OUTLINED IN THE GEOTECHNICAL SOILS REPORT SHALL BE DETERMINED BY PERFORMING INDUSTRY STANDARD SOIL DENSITY TESTS BY A CERTIFIED TESTING AGENCY.

CONDITIONS DISCOVERED BY THE GENERAL CONTRACTOR AND/OR GEOTECHNICAL FIELD REPRESENTATIVE DURING EXCAVATION WHICH MAY PREVENT THE ATTAINMENT OF THE ALLOWABLE BEARING PRESSURE STATED IN THE GEOTECHNICAL SOILS REPORT, SHALL BE REPORTED TO THE ARCHITECT/ENGINEER.

FOUNDATION DESIGN VALUES - 2,000PSF (ASSUMED)

SLAB ON GRADE

UNLESS SPECIFICALLY STATED OTHERWISE IN THE GEOTECHNICAL SOILS REPORT, THE FOLLOWING MINIMUM CRITERIA SHALL BE ADHERED TO.

a.) INTERIOR FILL SHALL BE COMPACTED TO A MINIMUM OF 95% OF THE MODIFIED PROCTOR MAXIMUM DRY DENSITY TEST (ASTM D1557).

b.) COMPACTION OF THE SOIL IN THE FIELD SHALL BE MONITORED/CONTROLLED BY A REPRESENTATIVE OF A QUALIFIED LABORATORY.

c.) EACH LAYER OF FILL SHALL NOT EXCEED 12" THICK AND SHALL BE COMPACTED PRIOR TO PLACEMENT OF THE NEXT LAYER.

MAXIMUM SPACING OF CONTROL JOINTS SHALL BE AS SHOWN IN THE TABLE BELOW. PATTERNS SHALL BE APPROXIMATELY SQUARE W/ RATIO OF LONG SIDE TO SHORT SIDE NOT TO EXCEED 1.5 TO 1.0.

SLAB THICKNESS (IN) -	4	5	6	7	8	9	10
SPACING (FT)	12	13	15	18	20	23	25

MIX DESIGNS CONTAINING AGGREGATE LESS THAN 3/4" ARE NOT ACCEPTABLE

CUT SLAB AS SOON AS AGGREGATE DOES NOT DISLODGE (MUST BE WITHIN THE SAME DAY AS THE CONC. WAS PLACED)

CARE SHALL BE TAKEN BY THE GENERAL CONTRACTOR WHEN DETERMINING THE LOCATION OF SJ'S AND CJ'S TO ENSURE SLAB JOINTS DOES NOT READ THROUGH THE ARCHITECTURAL FINISHES.

WAREHOUSE SLABS SHALL BE POWER-TROWELLED TO A HARD, SMOOTH BURNISHED FINISH. THE FINAL TROWEL PASS SHALL BE DONE BY MACHINE - NOT BY HAND. WITHIN 30 MINUTES OF THE FINAL TROWEL PASS, THE FLOOR SHALL BE CURED WITH EUCLID'S SUPER REZ-SEAL OR APPROVED EQUAL.

SLAB THICKNESS SHALL BE INCREASED AS REQUIRED TO PROVIDE ADEQUATE SUPPORT FOR CRANE LOADS WITHOUT CRACKING SLAB.

REINFORCING:

ALL REINFORCING SHALL BE DOMESTICALLY PRODUCED WITH REBAR CONFORMING TO ASTM-615 FOR GRADE 60 STEEL, AND WELDED WIRE FABRIC (WWF) TO ASTM A-185.

SPLICES AND ANCHORAGE OF REINFORCING SHALL BE AS FOLLOWS UNLESS OTHERWISE NOTED:

WELDED WIRE FABRIC	12" MIN.
POURED CONCRETE	36 X BAR DIA (12" MIN)
GROUTED CELLS	48 X BAR DIA

REINFORCEMENT IN WALLS, FOOTINGS AND BEAMS SHALL BE CONTINUOUS AND LAPPED AS SPECIFIED ABOVE, UNLESS NOTED OTHERWISE. HOOK AND LAP ALL CORNER AND INTERSECTING BARS. (SEE REINF DEVELOPMENT DTL BLW).

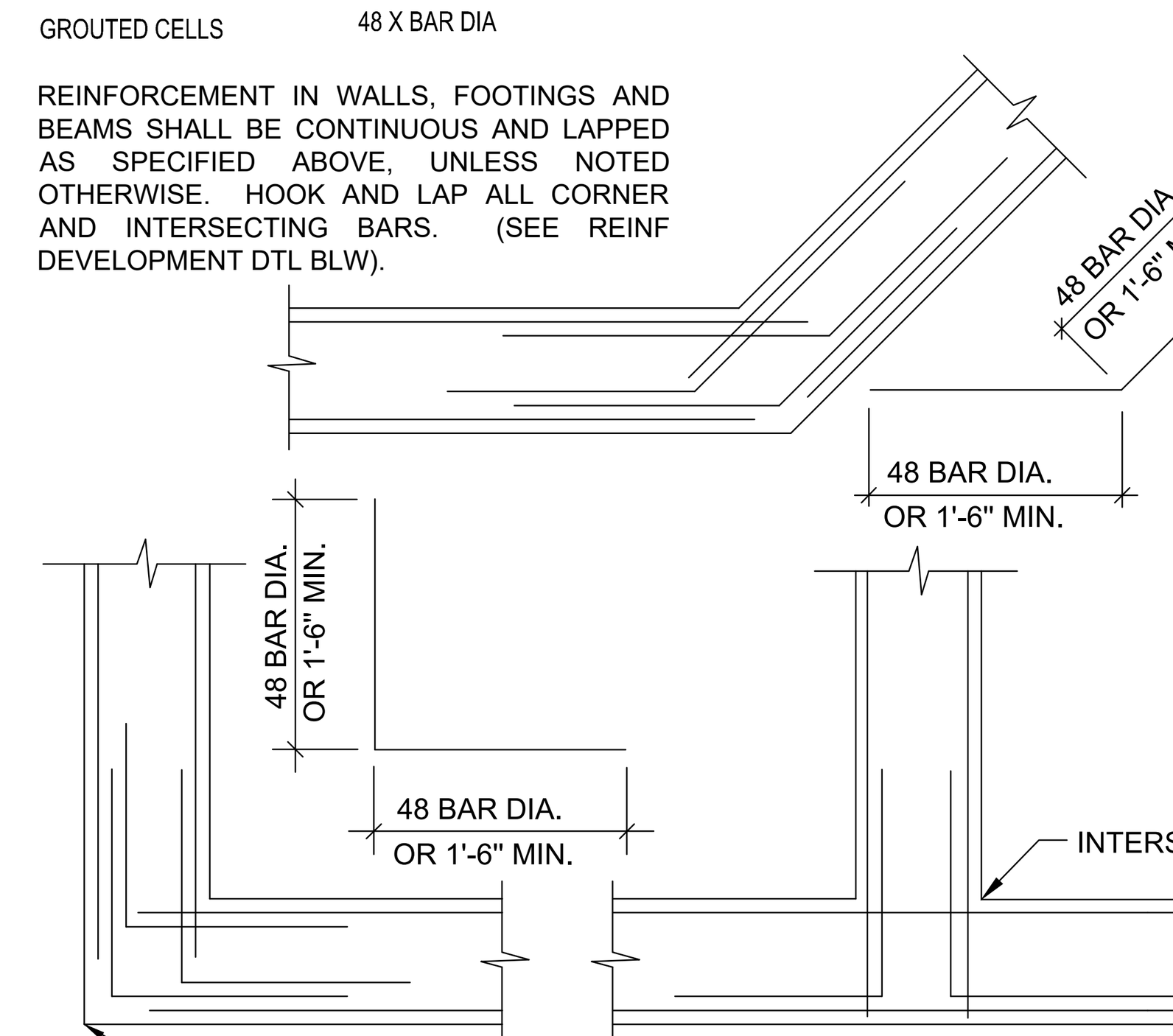

REINF DEVELOPMENT DETAIL

COVER FOR REINFORCING SHALL BE AS FOLLOWS:

1. a. CONCRETE CAST AGAINST AND PERMANENTLY EXPOSED TO EARTH — 3"
   b. CONCRETE EXPOSED TO EARTH OR WEATHER: — 2"
      #5 BAR, W31 OR D31 WIRE AND SMALLER — 1 1/2"
      #6 THRU #18 BARS
   c. CONCRETE NOT EXPOSED TO WEATHER OR IN CONTACT WITH GROUND: SLABS, WALLS, JOISTS: — 1 1/2"
      #14 AND #18 BARS — 3/4"
      #11 BAR AND SMALLER

MASONRY

MASONRY CONSTRUCTION, MATERIALS, AND INSPECTION SHALL CONFORM TO THE MINIMUM REQUIREMENTS OF THE LATEST ADOPTED EDITIONS ACI 530 & 530.1, ASCE 5 & 6, TMS 402 & 602, ASTM C476 & C1019, AND NCMA TEK 107, UNLESS SPECIFIED IN THESE CONTRACT DOCUMENTS.

CONCRETE BLOCKS SHALL CONFORM TO THE MINIMUM REQ. OF ASTM C-90 WITH f'm=1,500psi (1,900psi ON THE NET AREA)

MORTAR SHALL COMPLY WITH THE MINIMUM REQUIREMENTS OF ASTM C270 FOR TYPE M OR S W/ (COMPRESSIVE STRENGTH =2500psi AND 1800psi RESPECTIVELY. SITE TESTED MORTAR CUBES SHALL ACHIEVE A MINIMUM OF 80% OF THE DESIGN COMPRESSIVE STRENGTH)

BLOCK SHALL NOT BE MOISTENED BEFORE GROUTING.

ALL CROSS WEBS SHALL BE FULLY BEDDED IN MORTAR AROUND CELLS TO BE GROUTED.

GROUT FOR FILLED CELLS SHALL BE PLACED AS INDICATED BELOW:

NOTES:

1. DO NOT GROUT UNTIL MORTAR HAS SET SUFFICIENTLY TO WITHSTAND THE PRESSURE OF THE GROUT. WAIT NOT LESS THAN 24 HOURS.
2. WAIT A MINIMUM OF (1) HOUR BEFORE PLACING NEW GROUT ON A PREVIOUS LIFT.
3. THE MINIMUM CONTINUOUS UNOBSTRUCTED CLEAR AREA IN CELL TO RECEIVE GROUT MUST BE NOT LESS THAN 3"x3".
4. MORTAR FINS MUST BE REMOVED AS BLOCK PLACEMENT PROCEEDS.
5. MORTAR DROPPINGS MUST BE KEPT OUT OF CELLS WHICH ARE TO BE GROUTED.
6. MAXIMUM WALL HEIGHT FROM TOP OF FOOTING OR PREVIOUS GROUT POURS LAID UP AT ONE TIME SHALL BE 12'-0".

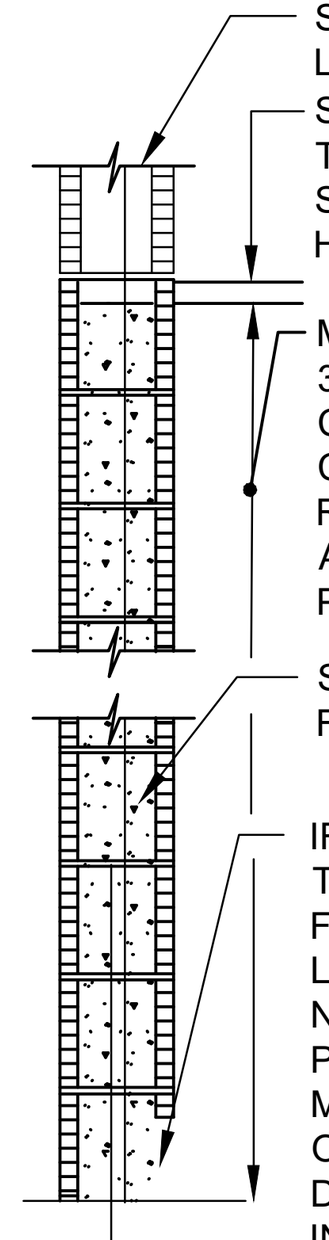

GROUTING DETAIL

GROUT PLACEMENT STOPPED FOR (1) HOUR OR MORE SHOULD BE STOPPED (1 1/2") BELOW THE TOP OF THE MASONRY UNIT TO PROVIDE A KEY FOR SUBSEQUENT GROUTING.

STOPPING AND RESUMING WORK: RACK BACK 1/2-UNIT LENGTH IN EACH COURSE. DO NOT TOOTH. CLEAN EXPOSED SURFACES OF SET MASONRY WET UNITS LIGHTLY (IF REQ'D) AND REMOVE LOOSE MAS UNITS AND MORTAR PRIOR TO LAYING FRESH MASONRY.

DO NOT APPLY UNIFORM LOADS TO MASONRY WALLS FOR (3) DAYS.

DO NOT APPLY CONCENTRATED LOADS TO MASONRY WALLS FOR (7) DAYS.

MAXIMUM CONTROL JOINT SPACING FOR CONCRETE MASONRY UNITS SHALL BE THREE (3) X WALL HEIGHT BUT NO FURTHER THAN 30FT APART NOR 15FT OFF ANY CORNER OR RETURN. REFERENCE ARCHITECTURAL DRAWINGS FOR EXACT LOCATIONS.

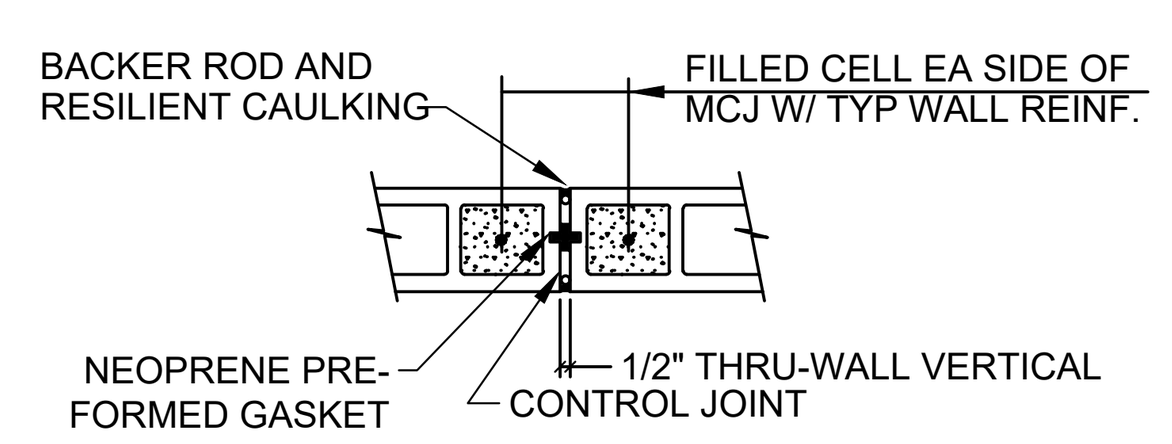

NOTES:

1. THRU-WALL JOINT SHALL BE CONTINUOUS WITHOUT INTERRUPTION FROM FOUNDATION TO TOP OF WALL.
2. TERMINATE TYPICAL HORIZONTAL JOINT REINFORCING AT JOINT.
3. MAXIMUM SPACING OF CONTROL JOINTS SHALL BE (3) X WALL HEIGHT BUT NO FURTHER THAN 30FT APART NOR 15FT OFF ANY CORNER OR RETURN.

MASONRY CONTROL JT (MCJ)

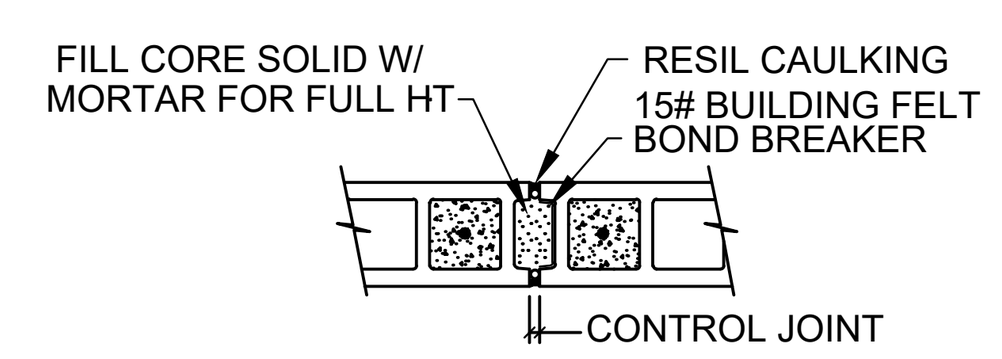

THE CONTRACTOR MAY USE CONTROL TYPE BLOCK W/ ARCH APPROVAL

MASONRY CONTROL JT (MCJ) ALTERNATE

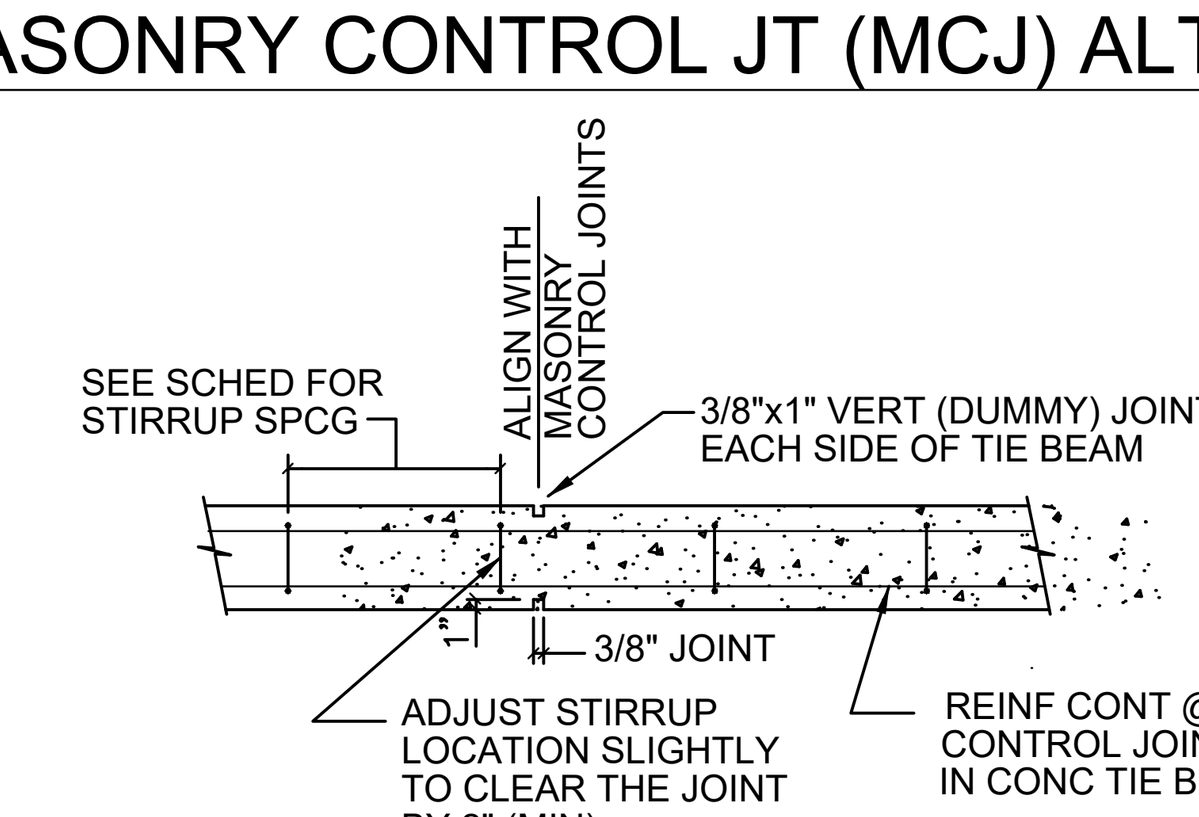

MCJ @ TIE BEAM

JOB SITE MIXING OF GROUT SHALL NOT BE PERMITTED. TESTING SHALL CONFORM TO ASTM C1019. SEE TEST MOLD DETAIL BELOW. SEE SCHEDULE UNDER CONCRETE NOTES FOR COMPRESSIVE STRENGTH AND SLUMP REQUIREMENTS.

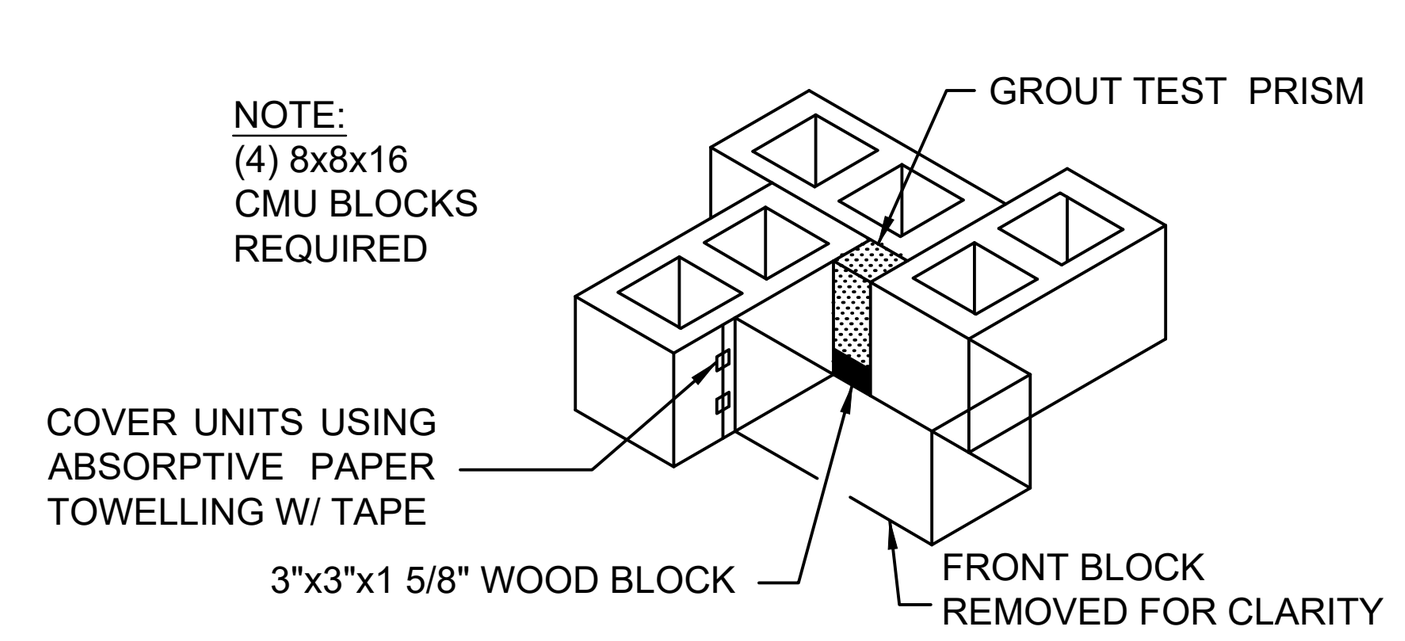

DETAIL MASONRY GROUT TEST MOLD (ASTM C-1019)

MASONRY CONT

TYPICAL MECHANICAL OPENING DETAIL:

NOTE:

GC TO CONTACT ENGINEER IF OPENING EXCEEDS SIZE AND AND SPACING SHOWN.

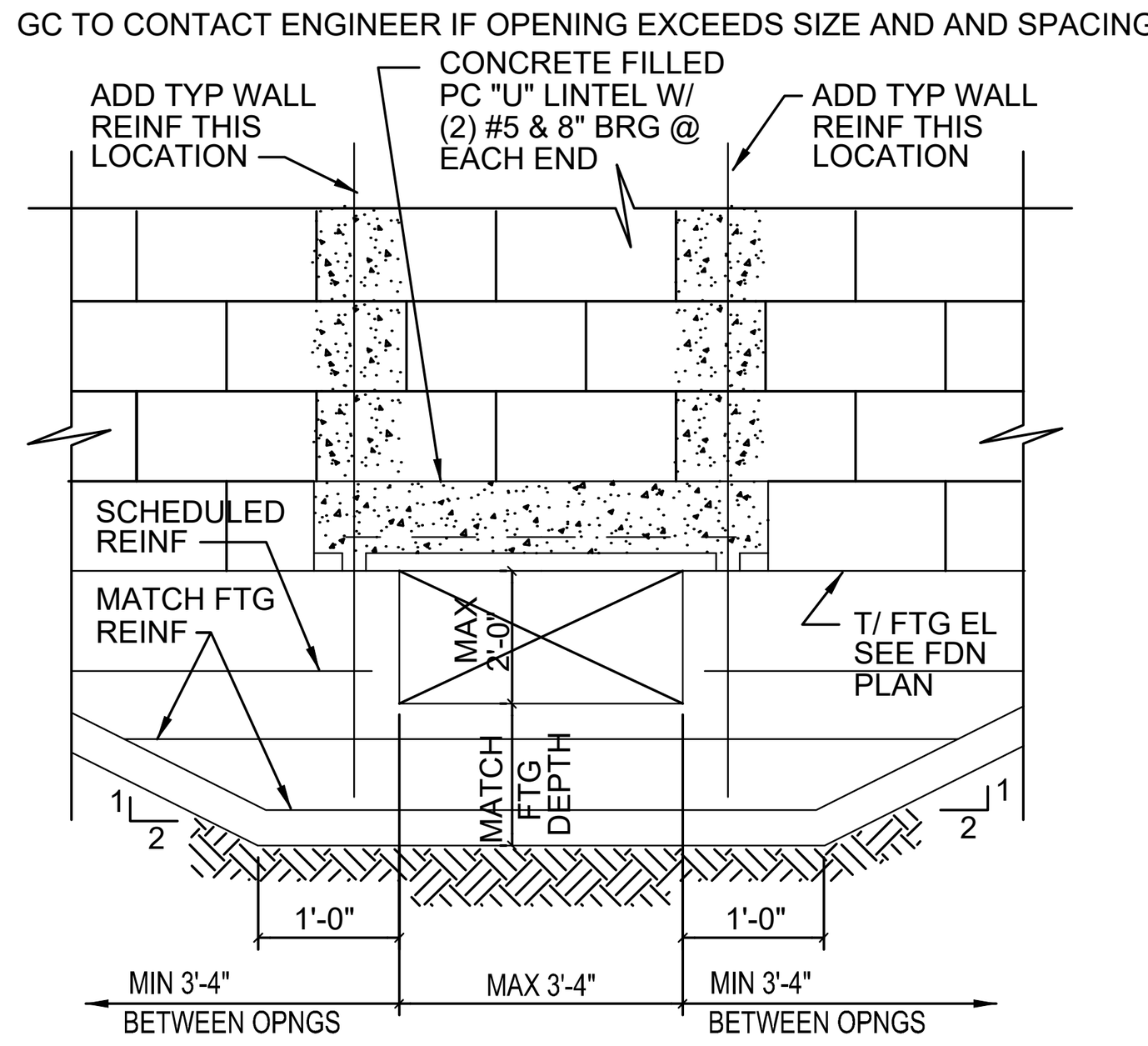

TYP MECH OPNG THRU FTG

TEMPORARY BRACING AND SHORING OF WALLS TO PROVIDE STABILITY DURING CONSTRUCTION IS THE RESPONSIBILITY OF THE CONTRACTOR.

PROVIDE GROUT FILLED PRECAST U-LINTELS WITH (1) #5 CONT AT ALL OPENINGS WHERE CONCRETE BEAMS ARE NOT SHOWN OR NOTED. MINIMUM UNFILLED LINTEL CAPACITY = 400 lb/LF FOR SPAN INDICATED.

HORIZONTALLY REINFORCE WALLS WITH LADDER TYPE (ASTM A-82, #9 GAGE WIRE) DEFORMED REINFORCEMENT EQUAL TO DURO-WALL IN BED JOINTS AT 16" OC UNO, MEASURED VERTICALLY. PLACE PER MFR INSTRUCTIONS. LAP ALL HORIZONTAL JOINT REINFORCING 8" MIN.

VERTICAL REINFORCING MUST HAVE A MINIMUM CLEARANCE OF 1/2" TO INSIDE FACE. VERTICAL BAR LAP = 48 x BAR DIAMETER. SEE FILLED CELL DETAIL BELOW FOR ADDITIONAL INFORMATION.

NOTES:

1. SEE FOUNDATION PLANS FOR ALL VERT REINF. REQ. TYP VERTICAL REINFORCING SIZE & SPACING SHALL BE ABOVE AND BELOW ALL WALL OPENINGS.
2. EXTEND ALL VERTICAL WALL REINFORCEMENT TO WITHIN 2" OF TOP OF WALL OR BEAM UNLESS NOTED OTHERWISE. TERMINATE REINFORCING WITH STANDARD ACI 90 DEGREE HOOK IF ROOF JOISTS AND/OR TRUSSES BEAR ON TOP OF WALL AND THERE IS NO PARAPET. IF PARAPET EXISTS, HOOK IS NOT REQUIRED.

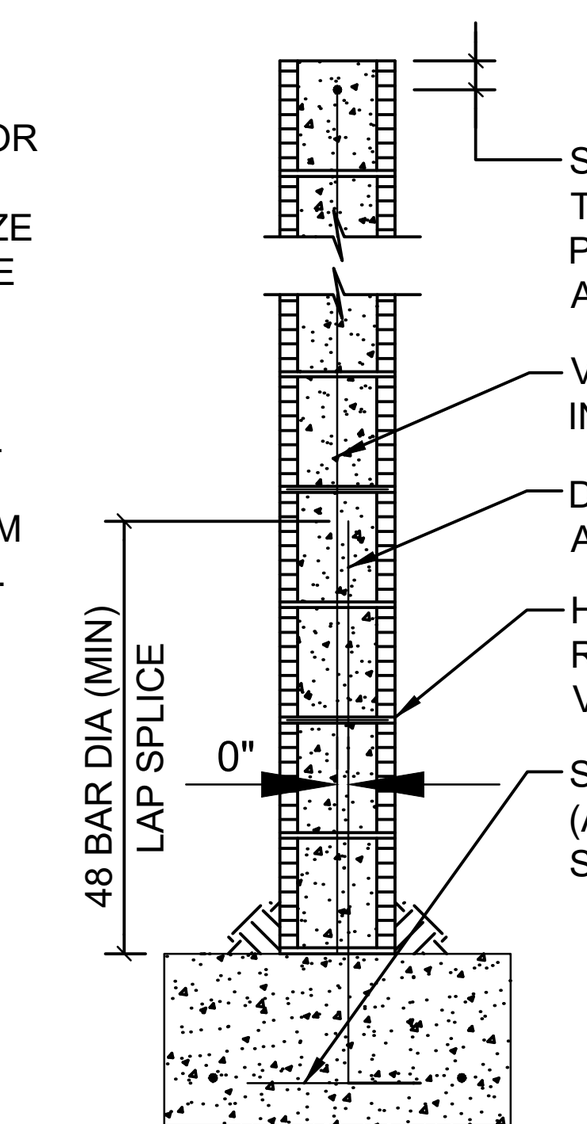

FILLED CELL DETAIL

VERTICAL REINFORCEMENT IN WALLS SHALL BE SECURED AND LATERALLY SUPPORTED AGAINST DISPLACEMENT AT INTERVALS NOT EXCEEDING 192 x BAR DIAMETER OR 10 FT WHICHEVER IS LESS WHENEVER A CLEANOUT IS REQUIRED. SEE GROUTING DETAIL NOTE FOR CLEANOUT REQUIREMENTS.

REINFORCE MASONRY OPENINGS GREATER THAN 1'-0" WIDE, WITH HORIZ JT REINF PLACED IN (2) HORIZ JOINT'S APPROXIMATELY 8" APART, IMMEDIATELY ABOVE THE LINTEL AND IMMEDIATELY BELOW THE SILL. EXTEND REINFORCING A MINIMUM OF 2'-0" BEYOND JAMBS OF THE OPENING EXCEPT AT CONTROL JOINTS. SEE PLAN FOR ADDITIONAL REQUIREMENTS.

CONCRETE:

ALL CONCRETE SHALL HAVE THE FOLLOWING MIN. PROPERTIES:

LOCATION	28 DAY STRENGTH	SLUMP	MAX AGGR.
FOUNDATION	3,000 psi	4" ± 1"	1 1/2"
SLAB-ON-GRADE (UP TO 4" THICK)	3,000 psi	4" ± 1"	1 1/2"
SLAB-ON-GRADE (OVER 4" THICK)	4,000 psi	4" ± 1"	1 1/2"
GROUT FOR FILLED CELLS	2,500 psi	8" ± 11"	3/8"

NOTES:

1. SLUMP FOR RAMPS AND SLOPING SURFACES SHALL NOT EXCEED 4".
2. SEE MASONRY GENERAL NOTES FOR GROUT TESTING REQUIREMENTS.

CONCRETE PROPERTIES SHALL BE VERIFIED THROUGH INDUSTRY STANDARD TESTING PROCEDURES BY A CERTIFIED TESTING AGENCY. MIN. TEST REQUIRED SHALL INCLUDE SLUMP AND CYLINDER BEAKS FOR COMPRESSIVE STRENGTH. FINDINGS SHALL BE SUBMITTED TO THE ARCH./ENG. FOR REVIEW.

CONCRETE WORK SHALL CONFORM TO ACI 301 (LATEST EDITION) SPECIFICATIONS FOR STRUCTURAL CONCRETE FOR BUILDINGS.

CONCRETE MIX DESIGN SUBMITTALS SHALL MEET THE FOLLOWING CRITERIA:

1. EACH MIX DESIGN SHALL BE LABELED TO INDICATE THE AREA IN WHICH THE CONCRETE IS TO BE PLACED. FAILURE TO DO SO WILL RESULT IN THE REJECTION OF SUBMITTALS.
2. PROPOSED MIX DESIGN SHALL BE ACCORDANCE WITH ACI 301 METHOD 1 OR METHOD 2 . SUPPORTING DATA SHALL BE PROVIDED IN TABULAR FORM FOR EACH SEPARATE PROPOSED MIX.
3. ENTRAPPED AIR CONTENT SHALL NOT EXCEED 3%.
4. ADMIXTURES USED TO ENTRAIN AIR ARE NOT ACCEPTABLE.

SITE ADDED WATER IS NOT ACCEPTABLE. ADDING WATER TO THE MIX WILL RESULT IN REJECTION OF THE RESULTS BY THE ENGINEER OF RECORD.

NOTES:

1. PLACE THRU-WALL CONTROL JOINTS AT 50'-0" OC MAX AND 20'-0" FROM CORNERS. DO NOT CONTINUE HORIZONTAL REINF ACROSS CONTROL JOINTS. SEE MASONRY CONTROL JOINT DETAIL. SEE ARCH. PLANS / RABCO'S STRUCTURAL PLANS FOR CONSISTENCY AND REPORT TO ENGINEER OF RECORD AND CLIENT WITH ANY DISCREPANCY.

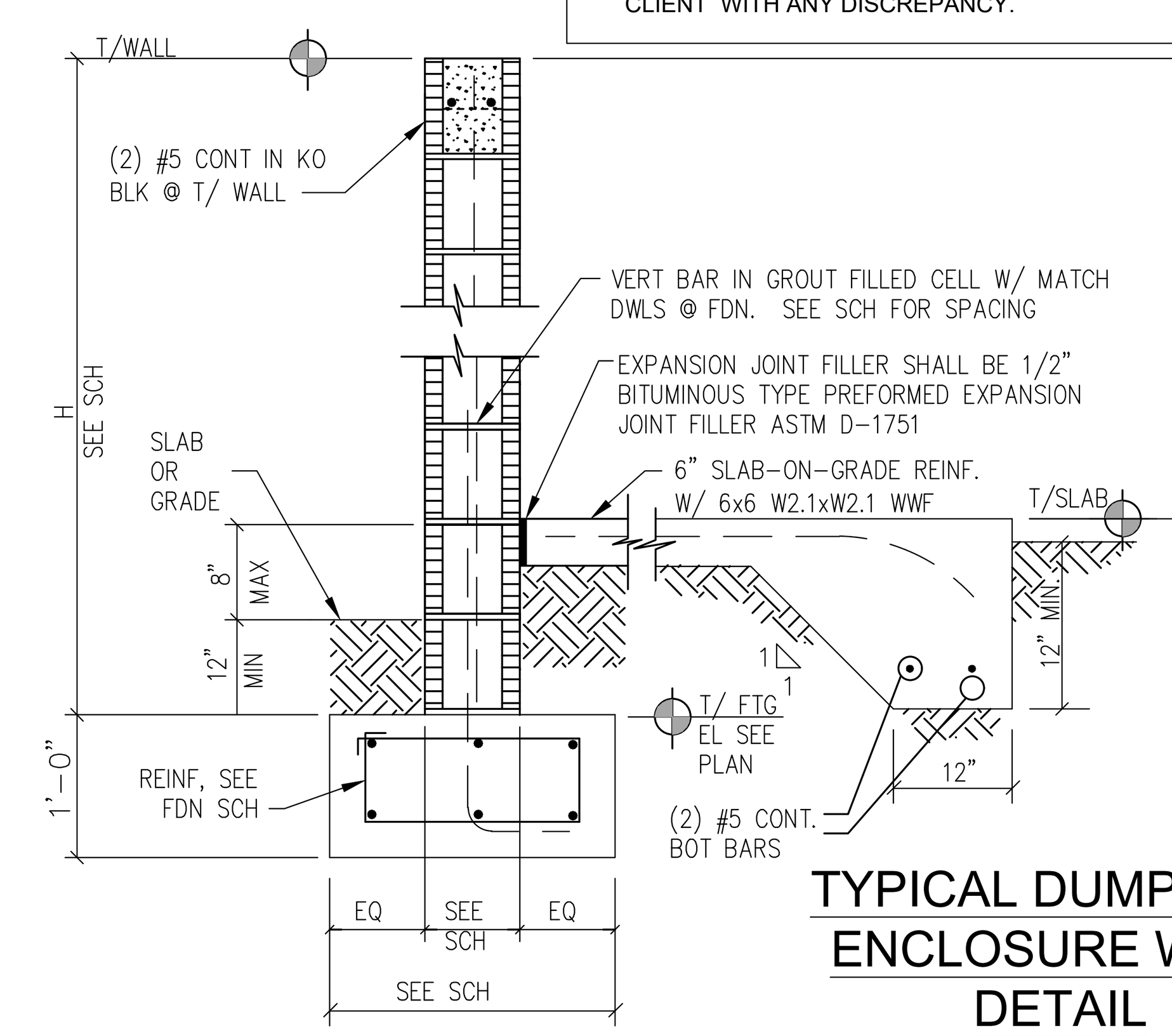

TYPICAL DUMPSTER ENCLOSURE WALL DETAIL

N.T.S

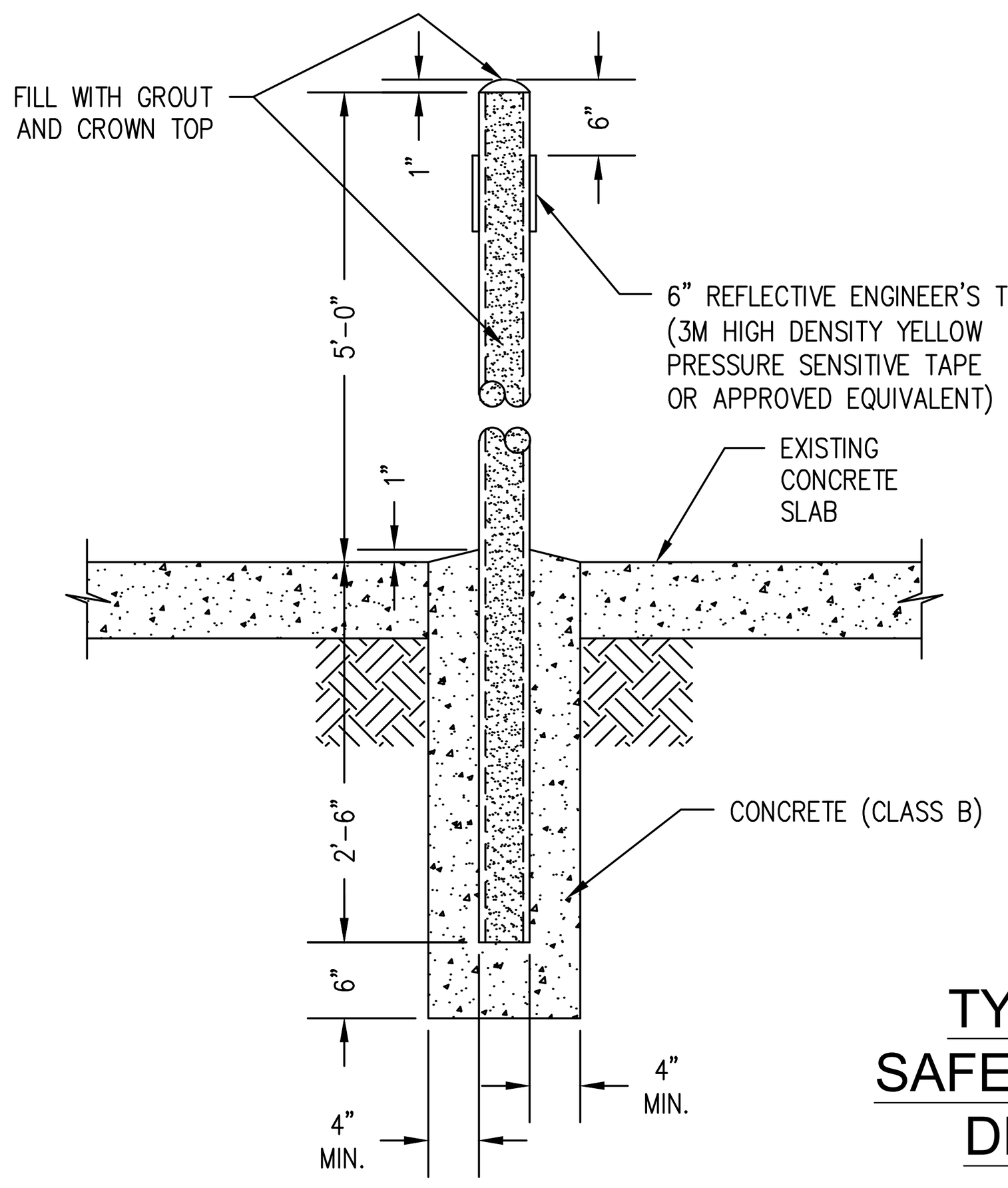

TYPICAL SAFETY POST DETAIL

N.T.S

(*) DUMPSTER WALL REINFORCING SCHEDULE				
WALL H	FOOTING SIZE (W X L)	CMU WIDTH (NOMINAL)	FOOTING REINFORCING	WALL REINFORCING
UP TO 5'-4"	3'-0" x CONT	8	(3) #5 CONT T&B, #4 TIES @ 16" OC	#5 @ 48" OC
5'-5" TO 6'-8"	3'-0" x CONT	8	(3) #5 CONT T&B, #4 TIES @ 16" OC	#5 @ 48" OC
6'-9" TO 8'-0"	3'-8" x CONT	8	(3) #5 CONT T&B, #4 TIES @ 12" OC	#5 @ 32" OC
8'-1" TO 8'-8"	3'-8" x CONT	8	(3) #5 CONT T&B, #4 TIES @ 12" OC	#5 @ 24" OC
8'-9" TO 9'-4"	4'-4" x CONT	8	(4) #5 CONT T&B, #4 TIES @ 12" OC	#5 @ 16" OC
9'-5" TO 10'-0"	4'-4" x CONT	8	(4) #5 CONT T&B, #4 TIES @ 12" OC	#6 @ 16" OC

(*) CONTRACTOR TO REVIEW ARCH. PLAN / RABCO'S STRUCTURAL PLAN FOR CONSISTENCY AND REPORT TO ENGINEER OF RECORD AND CLIENT FOR ANY DISCREPANCY.

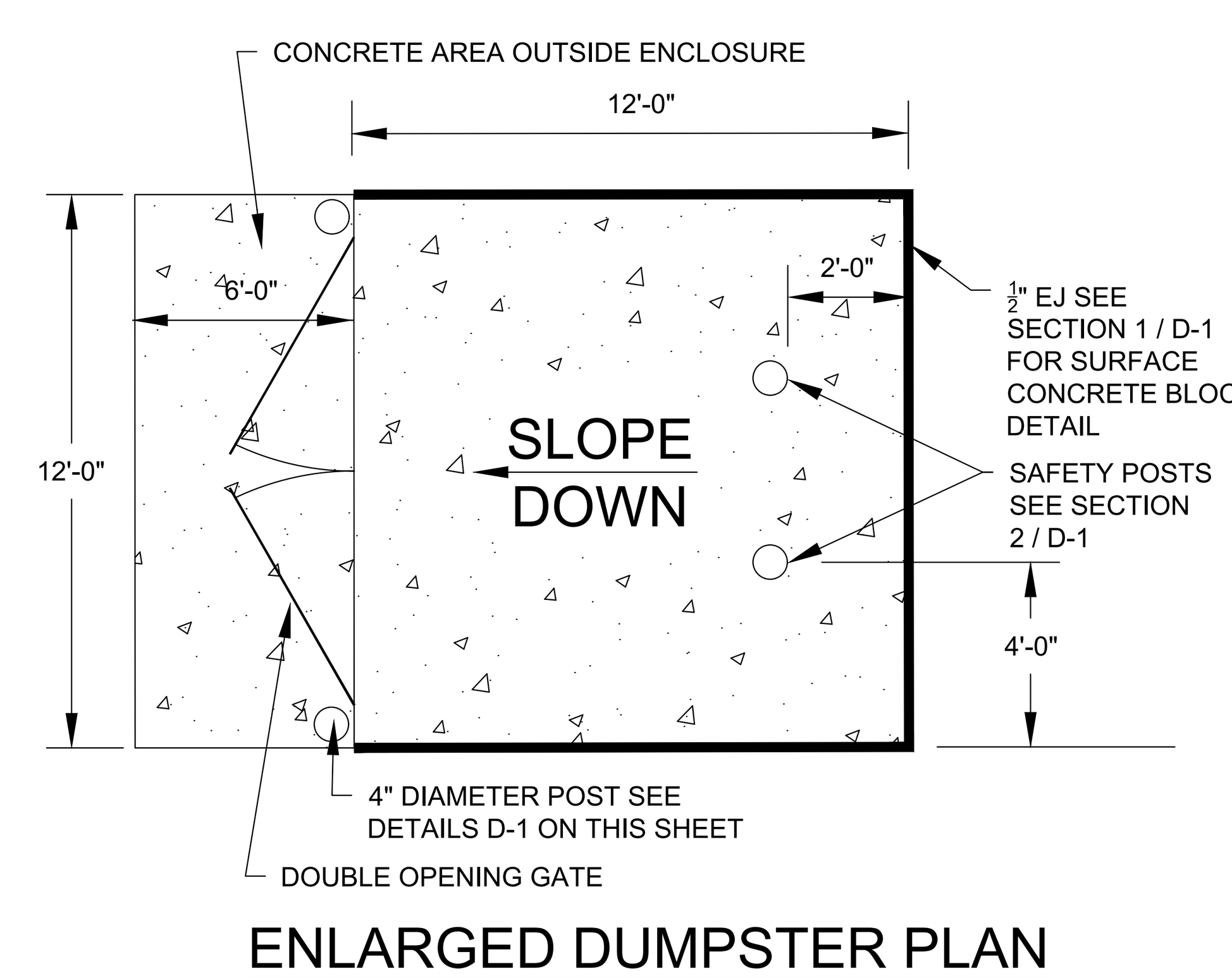

ENLARGED DUMPSTER PLAN

NOTES:

1. DETAIL HAS BEEN DESIGNED TO MEET ALL ANTICIPATED LOADING CONDITIONS OUTLINED IN THE 2017 EDITION OF THE FLORIDA BUILDING CODE FOR A 140MPH, RISK CATEGORY II, EXPOSURE "C" WIND LOAD EVENT.
2. SEE SITE DIMENSION PLAN FOR LOCATION OF DUMPSTER ENCLOSURE.
3. PROVIDE (2) FILLED CELLS AT DISCONTINUOUS ENDS AND (3) FILLED CELLS AT INTERSECTING CORNERS (TYP.).

Scale: N.T.S.

CONTRACTOR SHALL CONTACT SUNSHINE STATE ONE-CALL OF FLORIDA, INC. FOR LOCATION OF ALL UTILITIES TWO COMPLETE BUSINESS DAYS PRIOR TO BEGINNING CONSTRUCTION.

Know what's below. Call before you dig.

No.	Date	Revision - Description
1	06-28-2022	REVISED AS PER COUNTY COMMENTS
2		
3		
4		
5		
6		
7		

SYCAMORE ENGINEERING, INC.
8370 W. Hillsborough Ave., Suite 205
Tampa, FL 33615
Phone: 813.889.0700
Fax: 813.889.0788
e:mail: greatteam@sycamoreeng.com
• Civil Engineering • Surveying & Mapping • Land Planning • Construction Management • Landscape Architecture
F.L. C.A. # 9485 & L.B. # 7961

Project Title: THE SHOPPES AT MERES

Project Location: 1098 SOUTH PINELLAS AVENUE TARPON SPRINGS, FL 33689

Sheet Title: REFUSE ENCLOSURE DETAILS SHEET

Digitally signed by Jihad D Sabbagh
Date: 2025.05.07 16:04:54 -04'00'

J.D. ALSABBAGH, P.E.
FL P.E. #58995

Job No.	J0308
Drawn by:	FHG
Approved by:	JDA
Date:	04-16-2024

Sheet No.

C-11

THE DESIGN AND IDEAS INCORPORATED HEREIN, AS AN INSTRUMENT OF PROFESSIONAL SERVICE IS PROPERTY OF SYCAMORE ENGINEERING, INC. IT CAN NOT BE USED OR COPIED FOR ANY OTHER PROJECT WITHOUT WRITTEN AUTHORIZATION FROM SYCAMORE ENGINEERING, INC. DIMENSIONS SHOULD NOT BE OBTAINED BY USING SCALING OF THE PLAN. DIMENSIONS CAN BE OBTAINED BY CONTACTING SYCAMORE ENGINEERING, INC. DIRECTLY.© 2024

Ramp Requirements [§405]

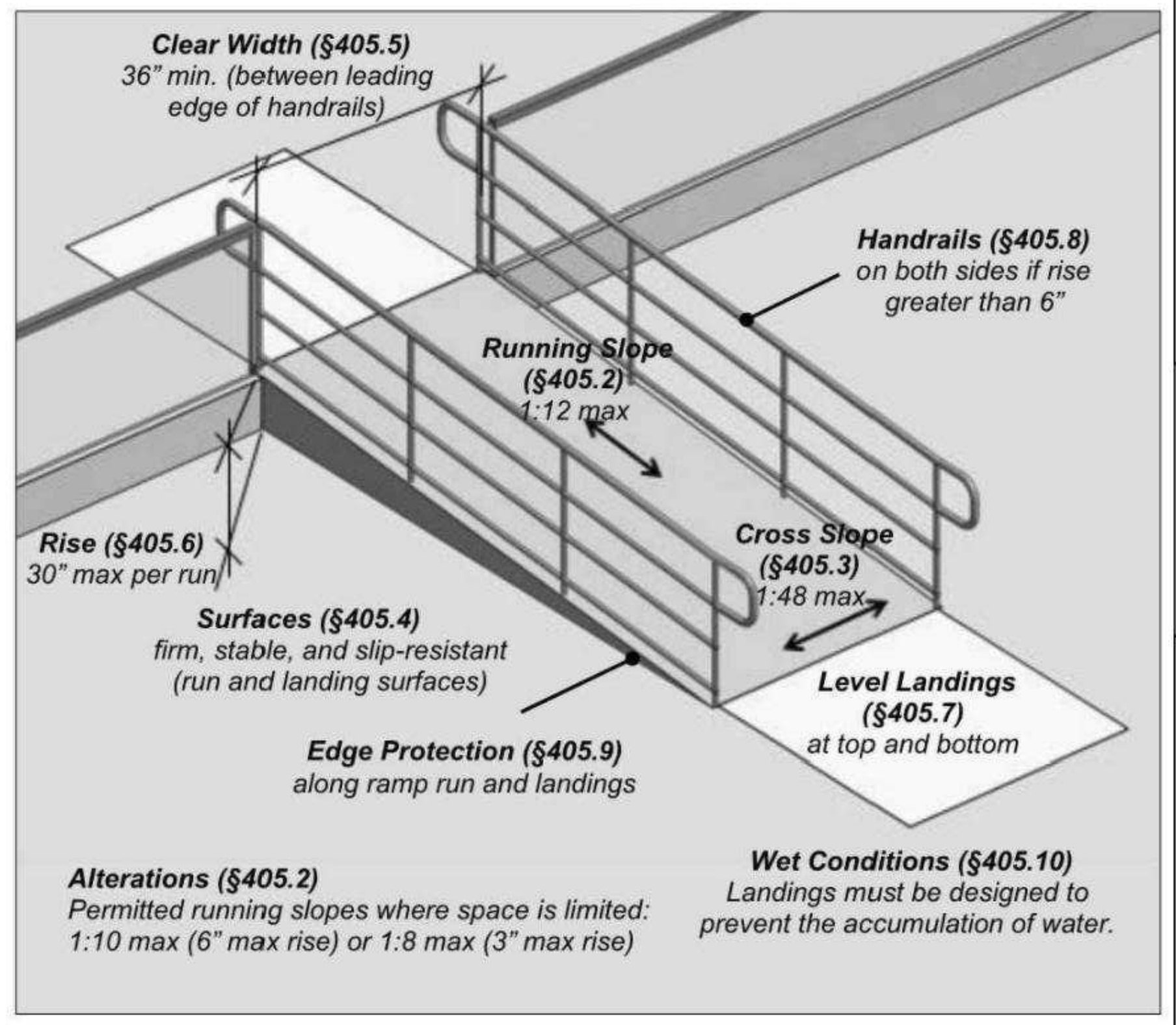

Slope [§405.2] and Cross Slope [§405.3]

Slope represents the proportion of vertical rise to horizontal length and is specified in the Standards as a ratio (e.g., 1:12). It also can be expressed as a percentage, pitch, or in degrees. The running slope is to be uniform along a run, although slight variations may occur with certain materials such as concrete. No other changes in level other than the running slope (1:12 max.) and cross slope (1:48 max.) are permitted. Variations in slope, such as grade breaks within runs, can disrupt wheelchair travel.

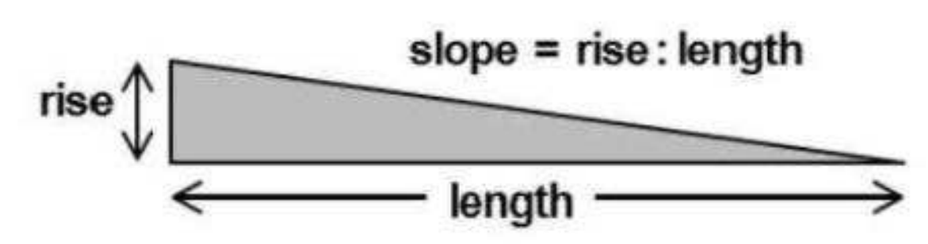

Clear Width [§405.5]

Ramp runs must have a clear width of 36" minimum (measured between handrails where provided). The width of ramps that are part of a means of egress may further be determined by applicable life safety codes and requirements for minimum exit widths greater than 36".

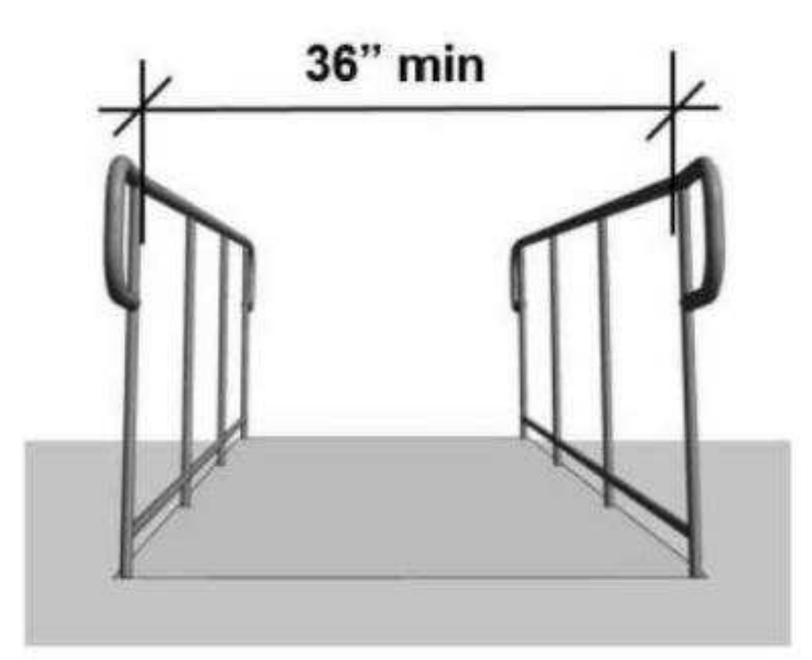

Employee Work Areas
Common use circulation paths must be accessible in work areas 1,000 sq. ft. or more in size. Ramps on these circulation paths must comply except that:

- *the clear width can be reduced below 36" by work area equipment where it is essential to the work being performed (§405.5); and*
- *handrails can be installed after construction, as needed (ramps must be sized so that the minimum clear width is maintained) (§405.8).*

Rise [§405.6]

The height of runs is limited (30" max.), but there is no limit on the number of runs a ramp may have. Long ramps with many runs can be strenuous for people using manual wheelchairs. While intermediate landings offer resting points, they do not reduce the amount of effort that must be exerted to negotiate multiple runs.

Landings [§405.7]

Level landings are required at the top and bottom of each run. Changes in level greater than 1:48 are not permitted at landings. Landings must be designed to prevent the accumulation of water.

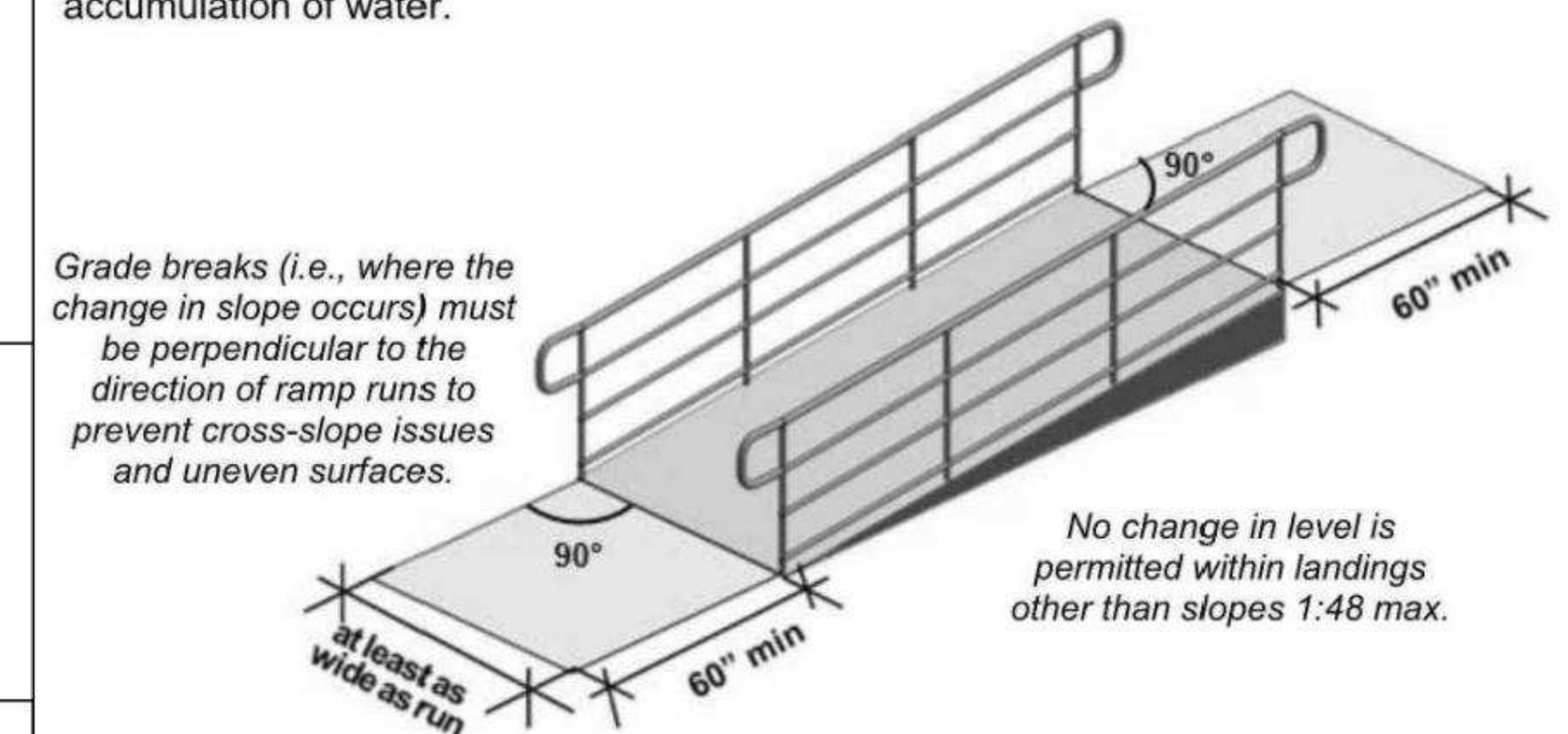

Intermediate landings between runs must be at least 60" wide clear and 60" long clear where ramps change direction (any change from linear). Handrails, edge protection, vertical posts and other elements cannot obstruct or overlap the minimum 60" by 60" clearance. The 12" minimum handrail extensions required at the top and bottom of ramp runs must be in the same direction of the run, but they can turn or wrap where handrails are continuous at the inside turn of dogleg or switchback ramps.

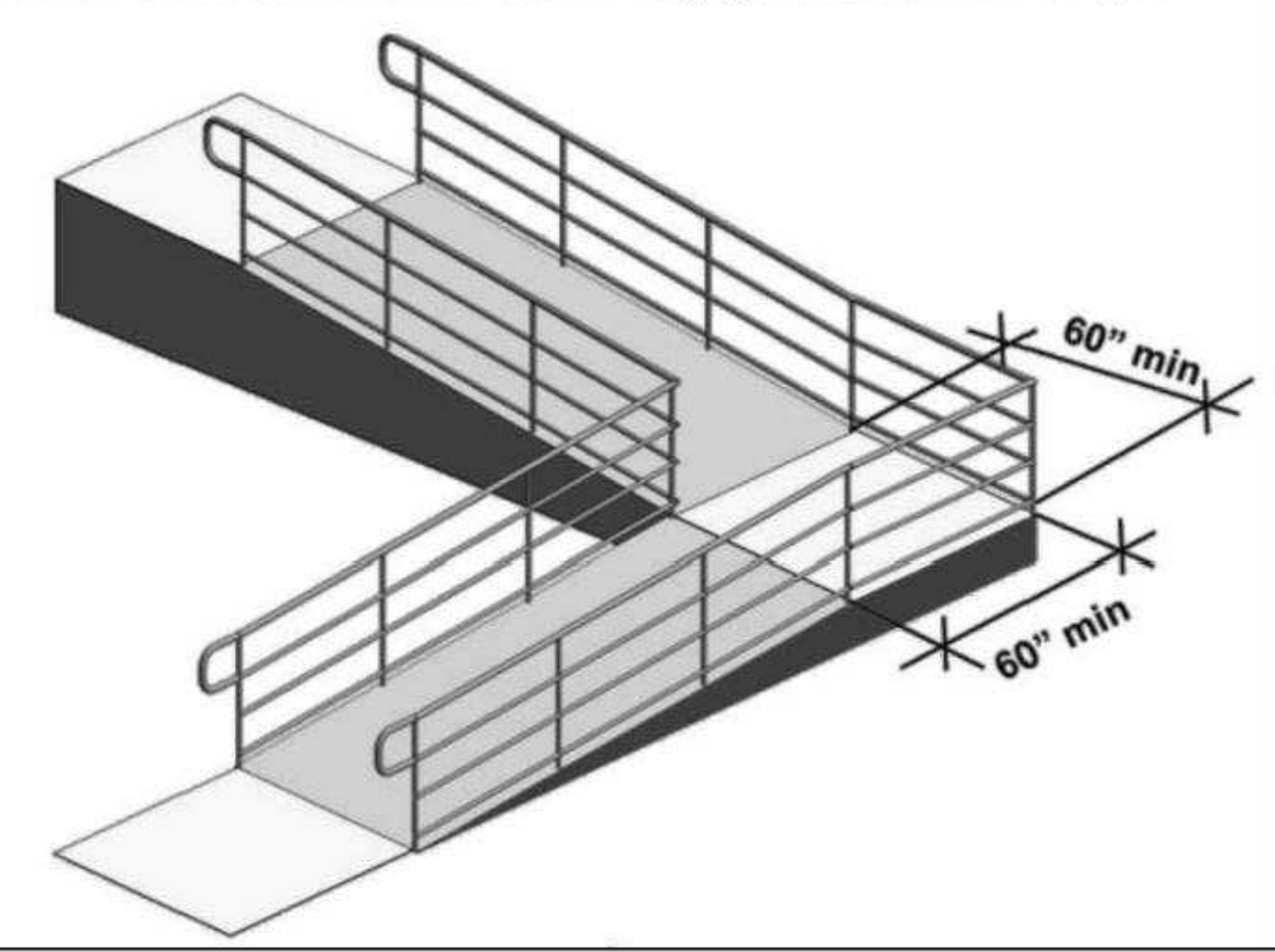

Intermediate Landings Where Ramps Change Direction

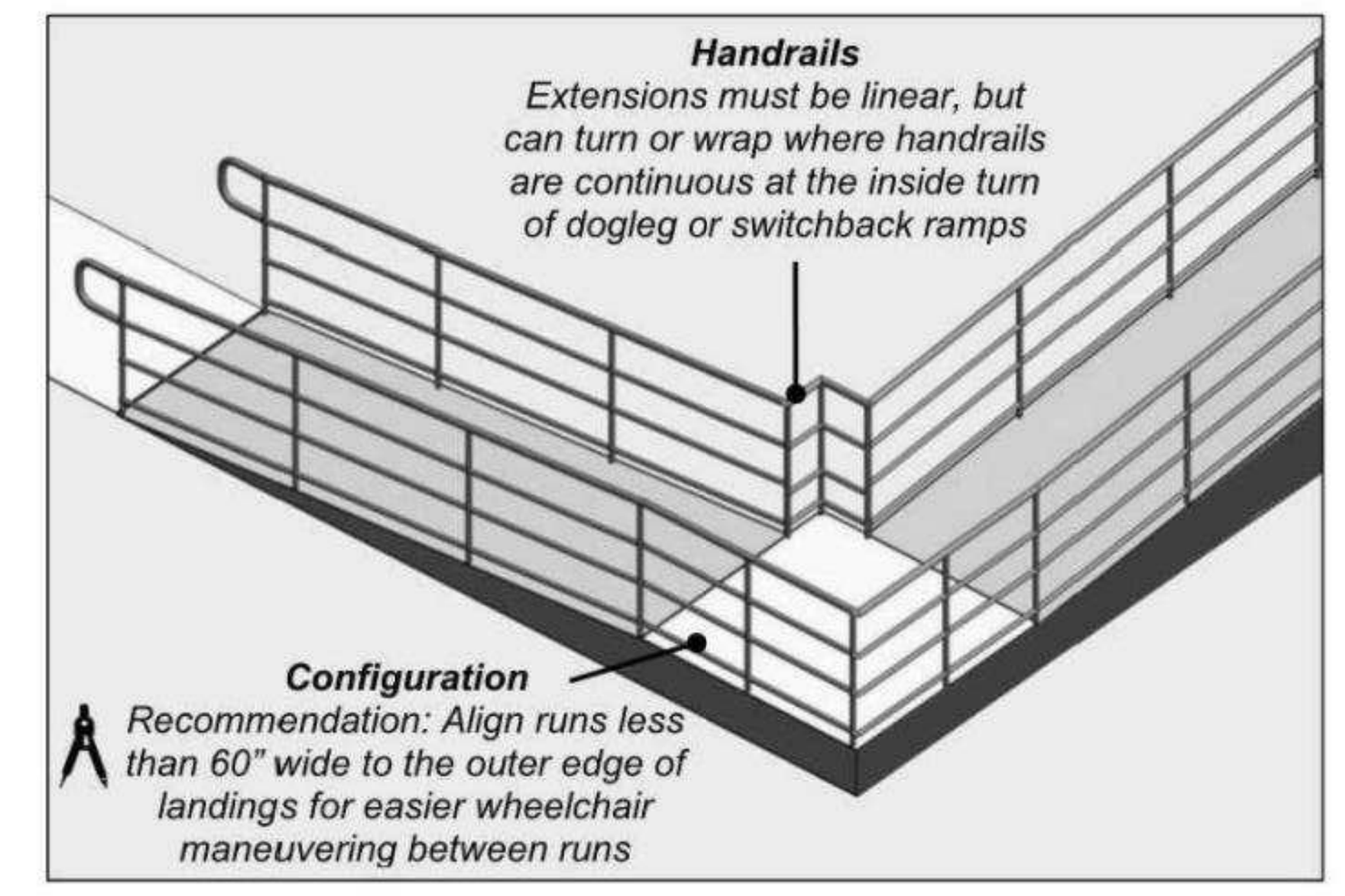

Doorways at Landings [§405.7.5]

Required door maneuvering clearances can overlap ramp landings (it is advisable to locate the swing of doors outside ramp landings for greater safety).

Doorways at Ramp Landings

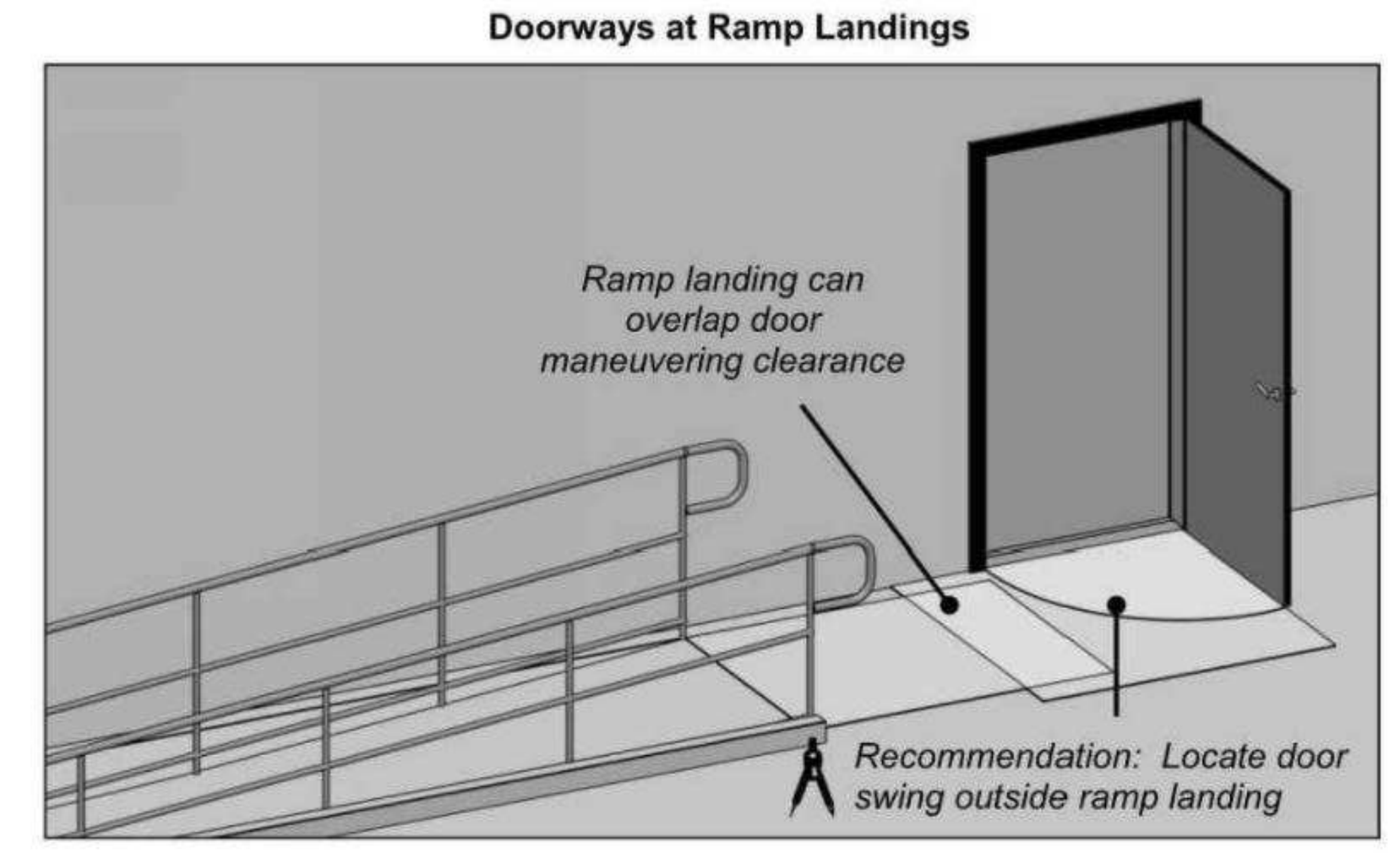

Handrails [§405.8, §505]

Handrails are required on both sides of ramps with a rise greater than 6". The Standards do not require lower handrails serving children except at ramps serving play areas, but include a recommended height (28" max.) and separation (9" min.) from the required handrail to minimize entrapment hazards.

Handrail Height and Clearance

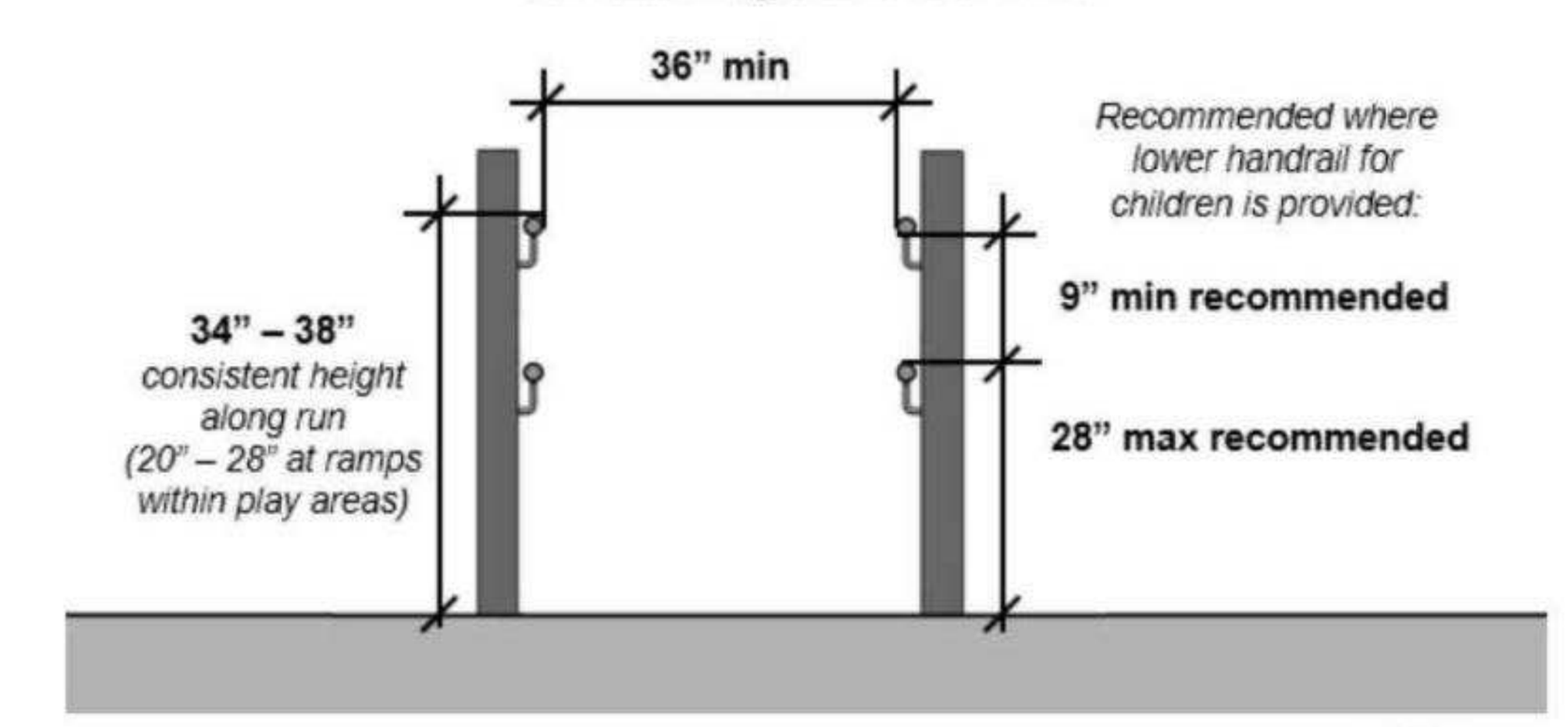

Handrail Continuity and Extensions

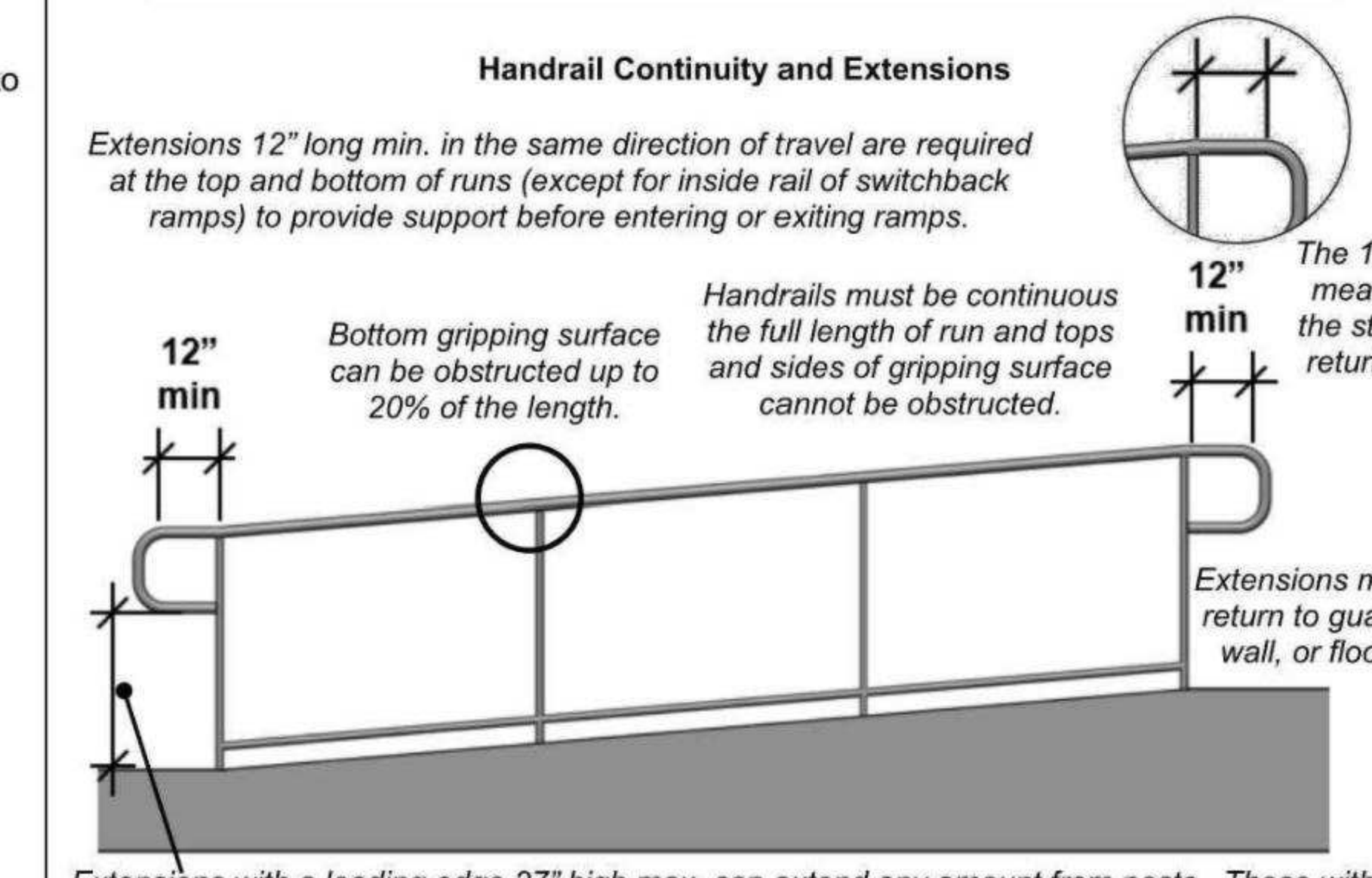

Parallel Curb Ramps

Curb ramps can be oriented parallel to sidewalks. This design provides an option where limited space precludes a top landing. A level landing 48" long minimum (60" preferred) accommodates maneuvering between runs and right-angle turns to connecting routes, such as parking access aisles and crossings.

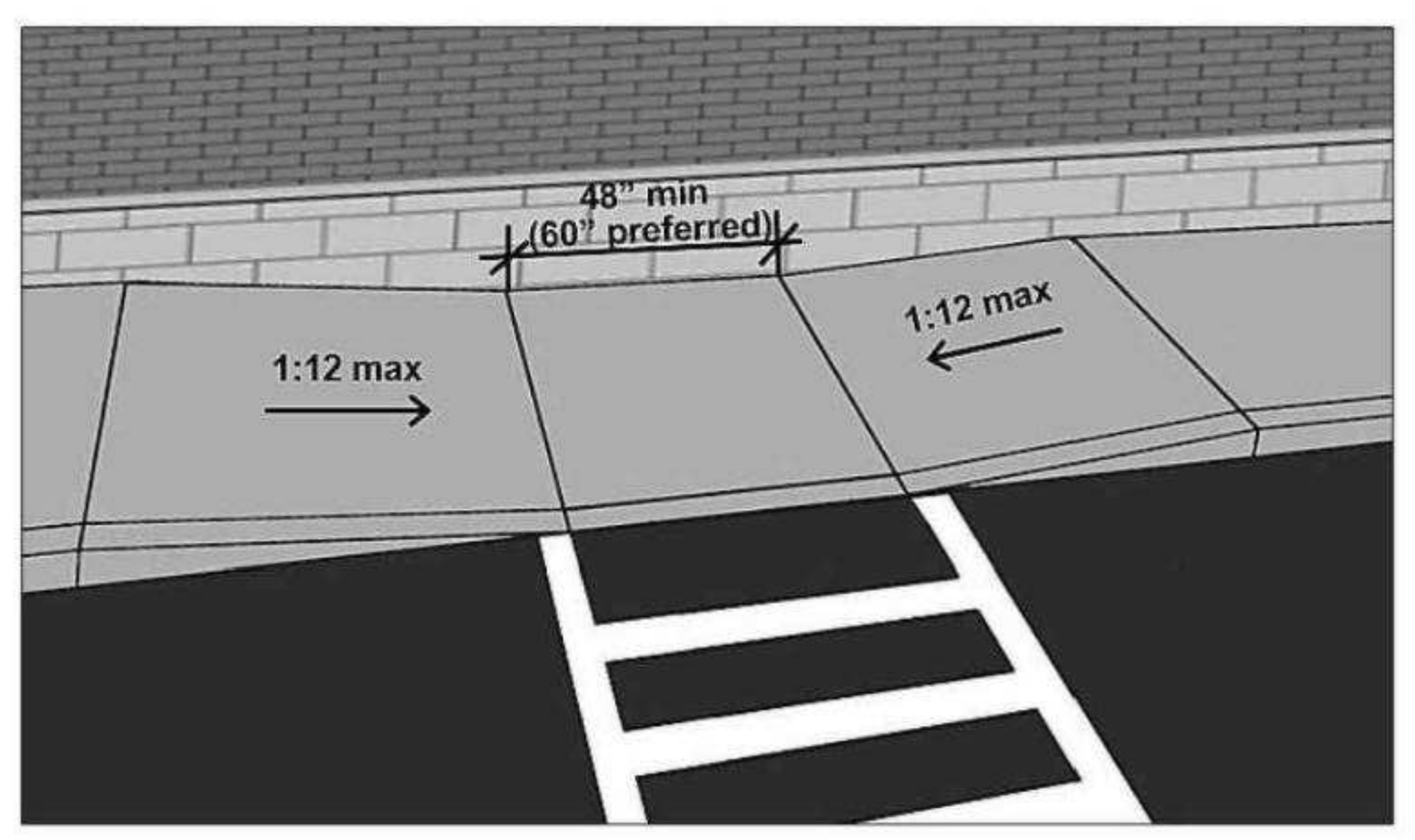

Edge Protection [§405.9]

Edge protection along ramp runs and landings keep wheelchair casters and crutch tips on the surface and can be provided by curbs, barriers, or extended surfaces.

Edge Protection Alternatives

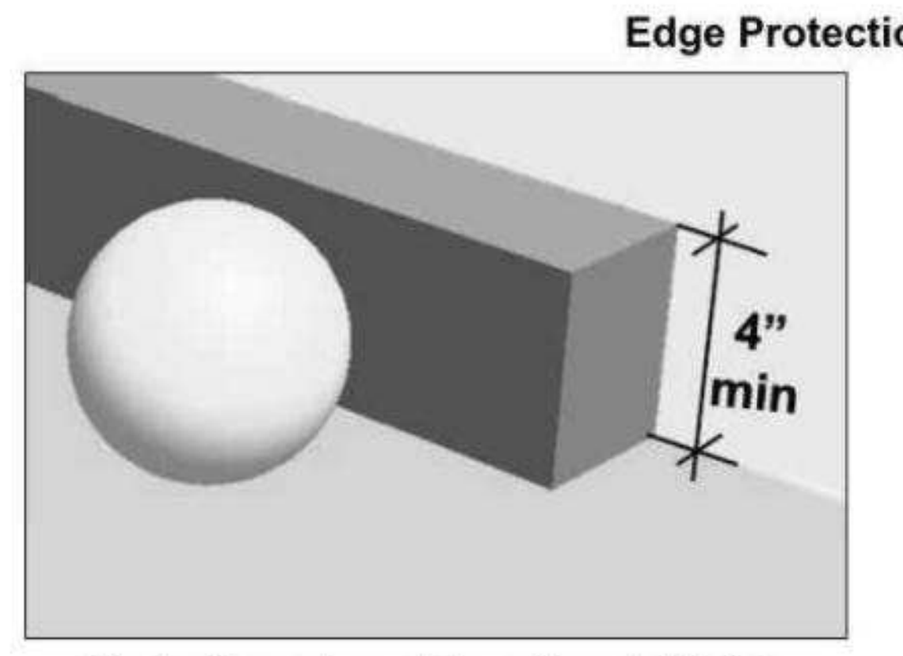

Curbs if used must be at least 4" high.

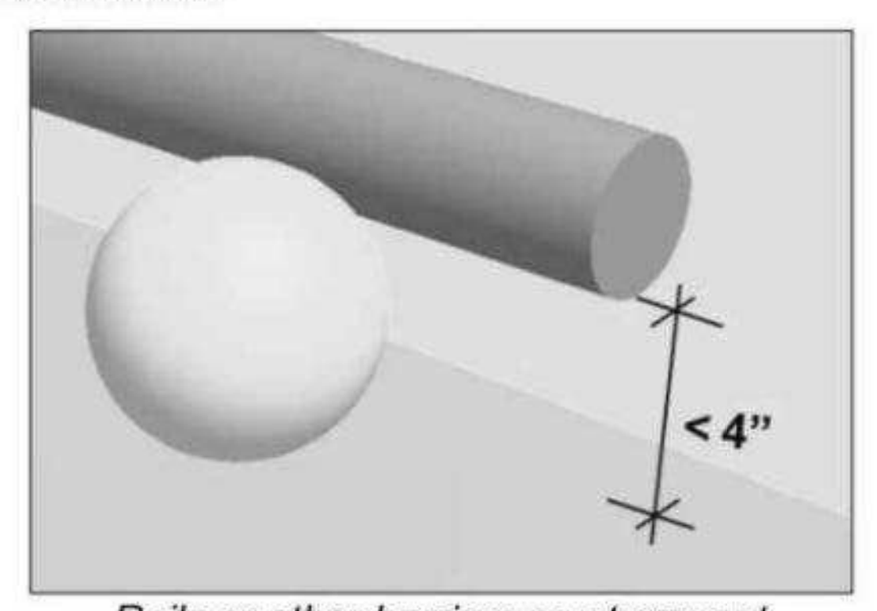

Rails or other barriers must prevent passage of a 4" diameter sphere.

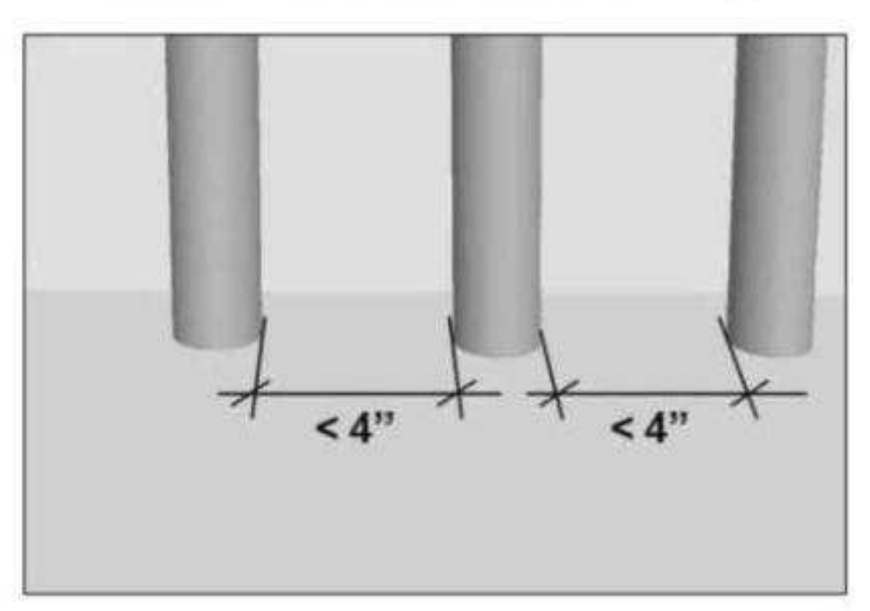

Vertical pickets used for edge protection must prevent passage of a 4" diameter sphere.

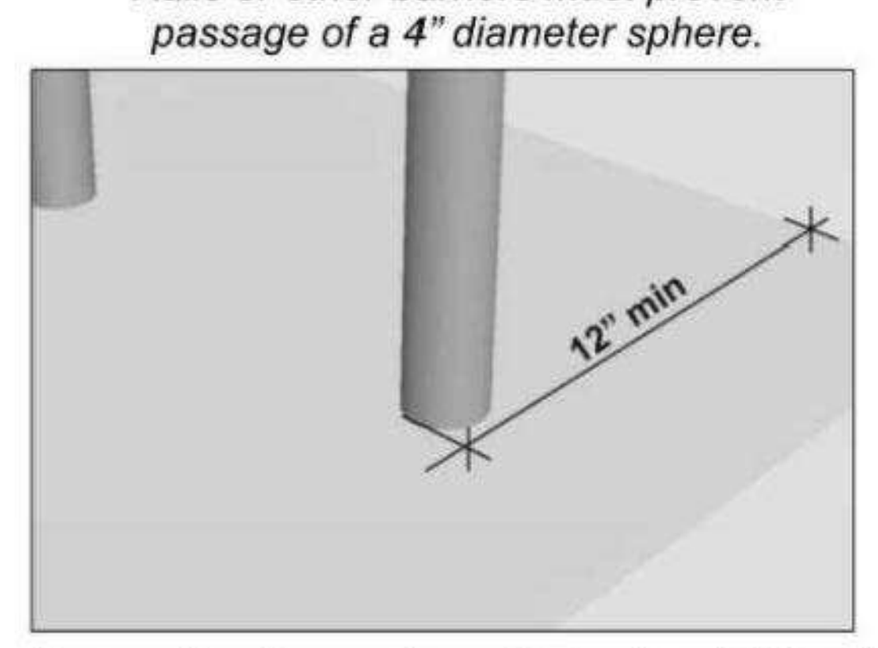

Run and landing surfaces that extend at least 12" beyond the inside face of handrails will provide adequate edge protection by preventing wheelchair casters and crutch tips from slipping off the edge.

Edge protection is not required at:

- ramps no higher than 6" that have side flares
- ramp landings serving an adjoining run or stairway
- sides of ramp landings with vertical drop-offs not exceeding ½" within 10" of the minimum landing area

Wet Conditions [§405.10]

Landings subject to wet conditions must be designed to prevent the accumulation of water. Landings are permitted slopes not steeper than 1:48 to allow for drainage.

Curb Ramps [§406]

Requirements for curb ramps apply to ramps that cut through curbs or are built up to them. New guidelines the Board is developing for public rights-of-way will further address curb ramps located along public streets and sidewalks, but they are not discussed in this guide. DOJ's 2010 ADA Standards require curb ramps at newly constructed or altered streets, highways, and street-level pedestrian walkways to provide an accessible route for pedestrians at intersections (28 CFR 35.151(i)).

Curb Ramp Requirements [§406]

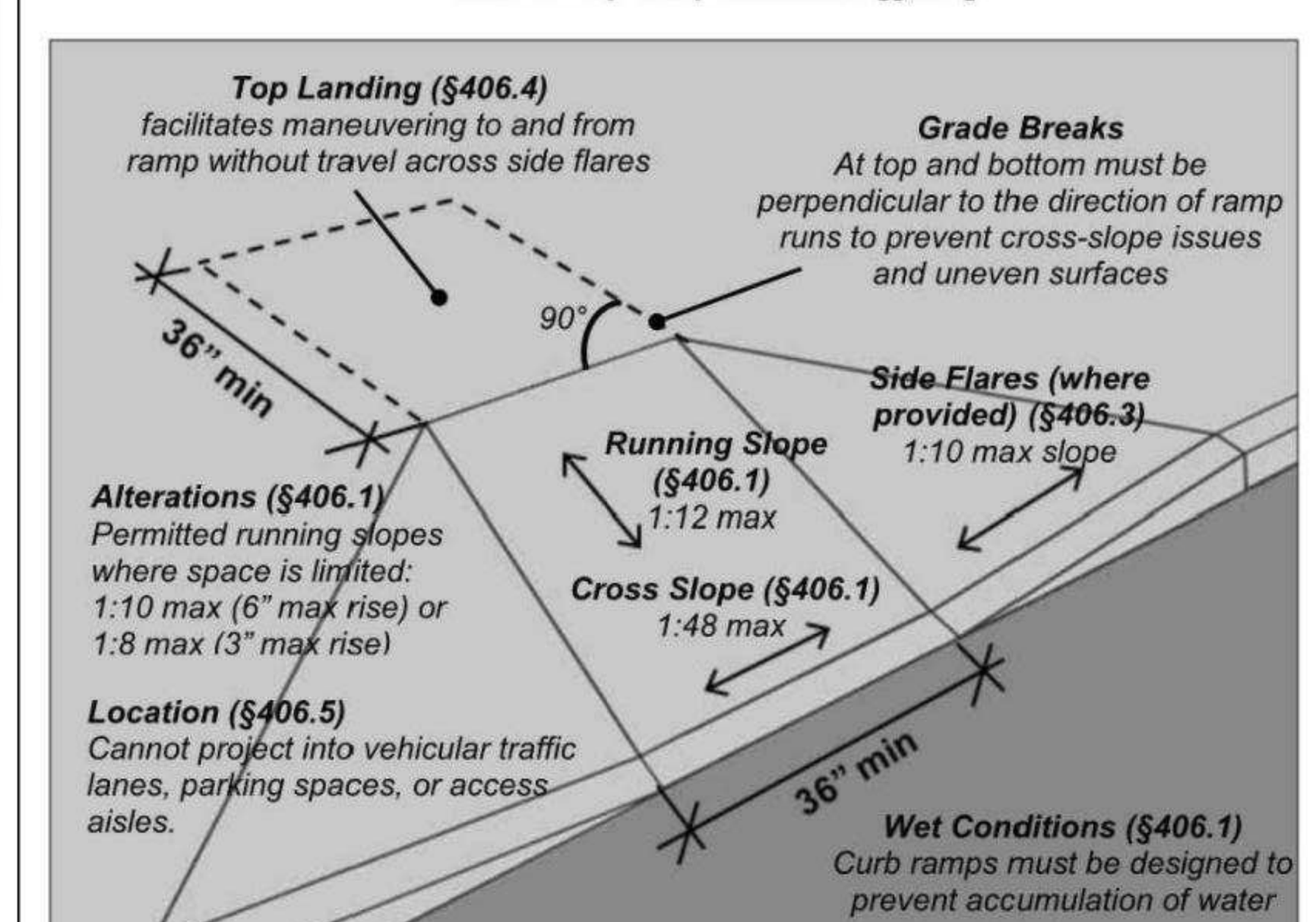

Transition to Street [§406.2]

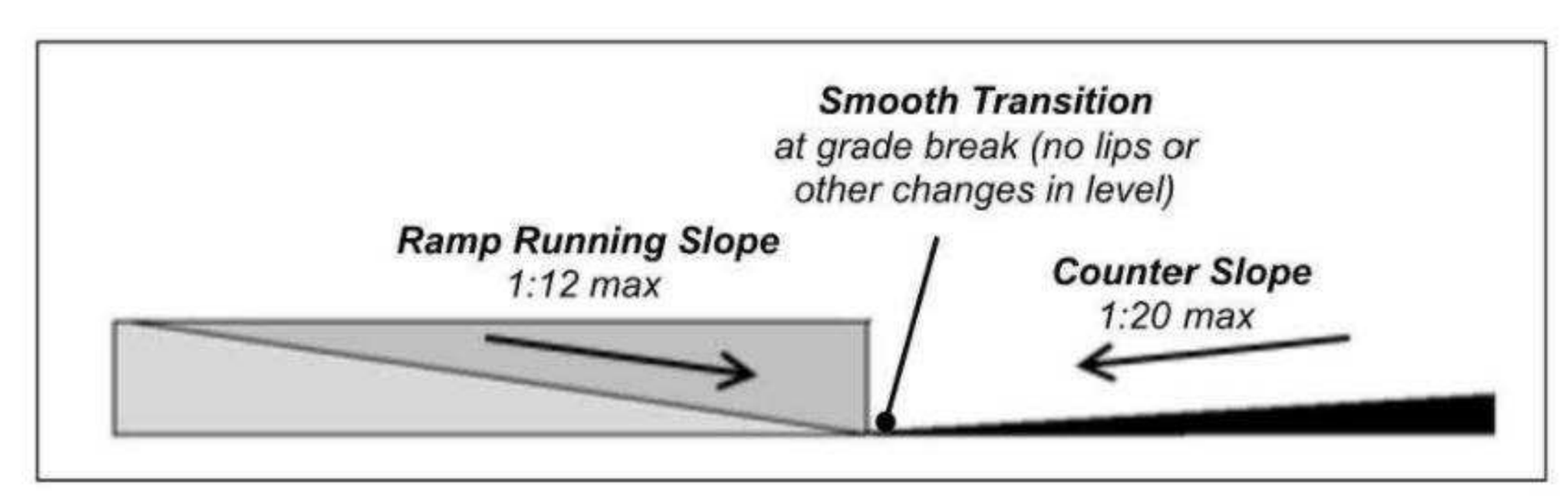

Top Landing [§406.4]

The required landing at the top of curb ramps allows an accessible route to connect to the ramp opening. Side flares, where provided, are intended primarily to prevent tripping hazards, not to accommodate wheelchair maneuvering at ramps (except in alterations where sufficient landing space is unavailable). Side flare slopes cannot exceed 1:10 max. (or 1:12 max. in alterations where a top landing is unavailable).

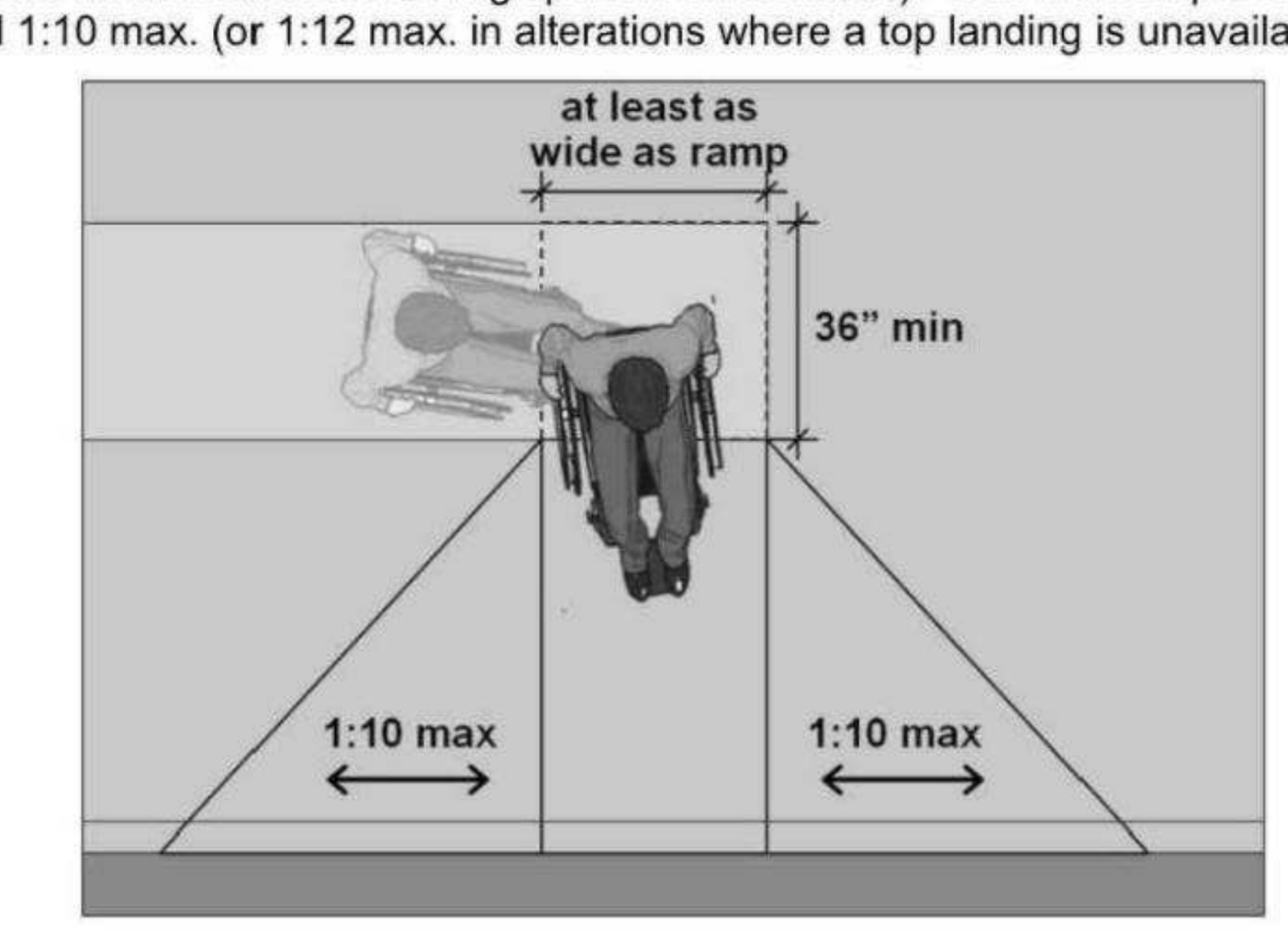

Alterations: Ramp without Top Landing

In alterations where sufficient landing space is not available, side flares must be provided and cannot slope more than 1:12 to facilitate wheelchair maneuvering. Parallel curb ramps (page 12) provide an alternative in such conditions.

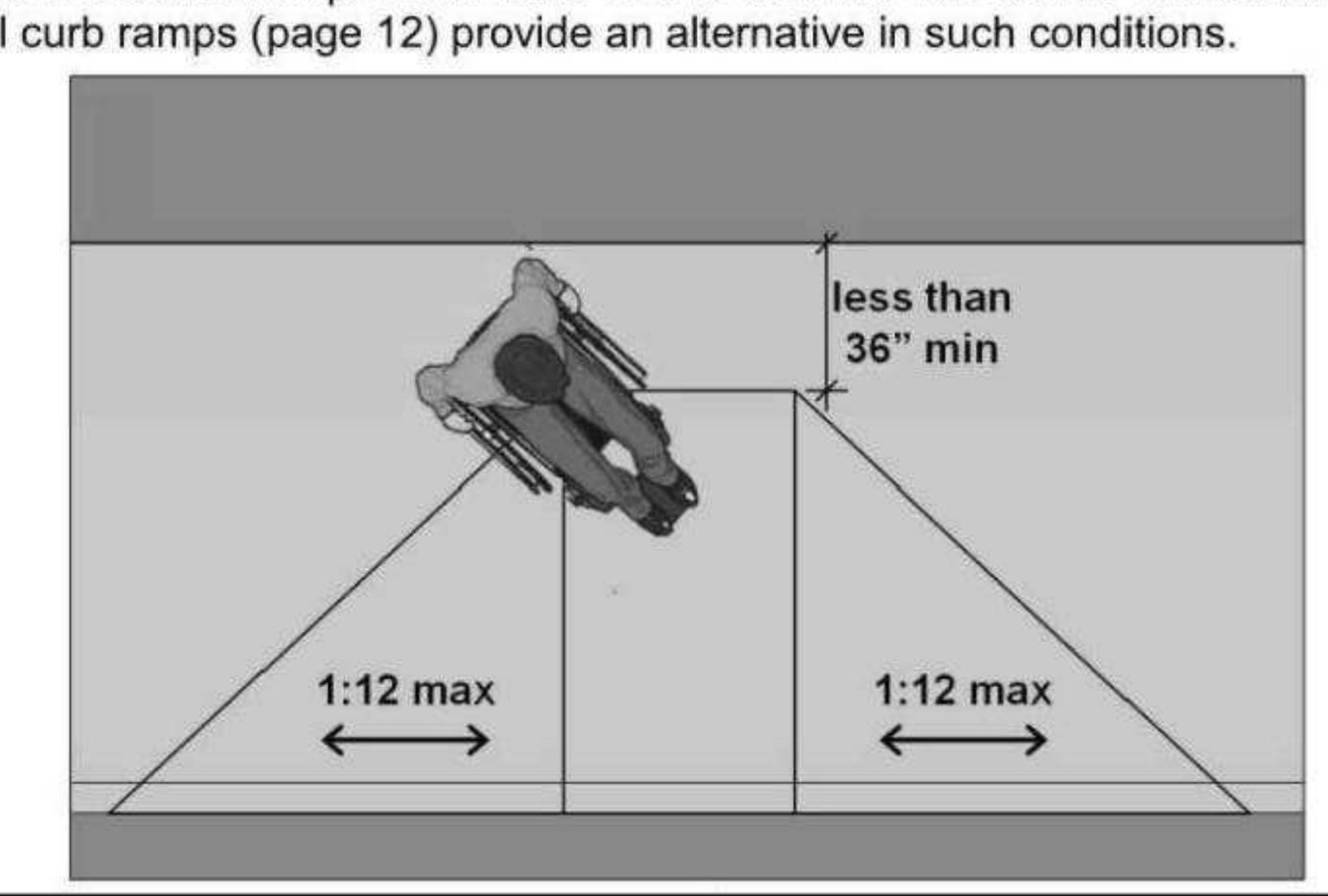

Top Landing Slope

The maximum slope of the top landing is determined by the configuration of connecting accessible routes.

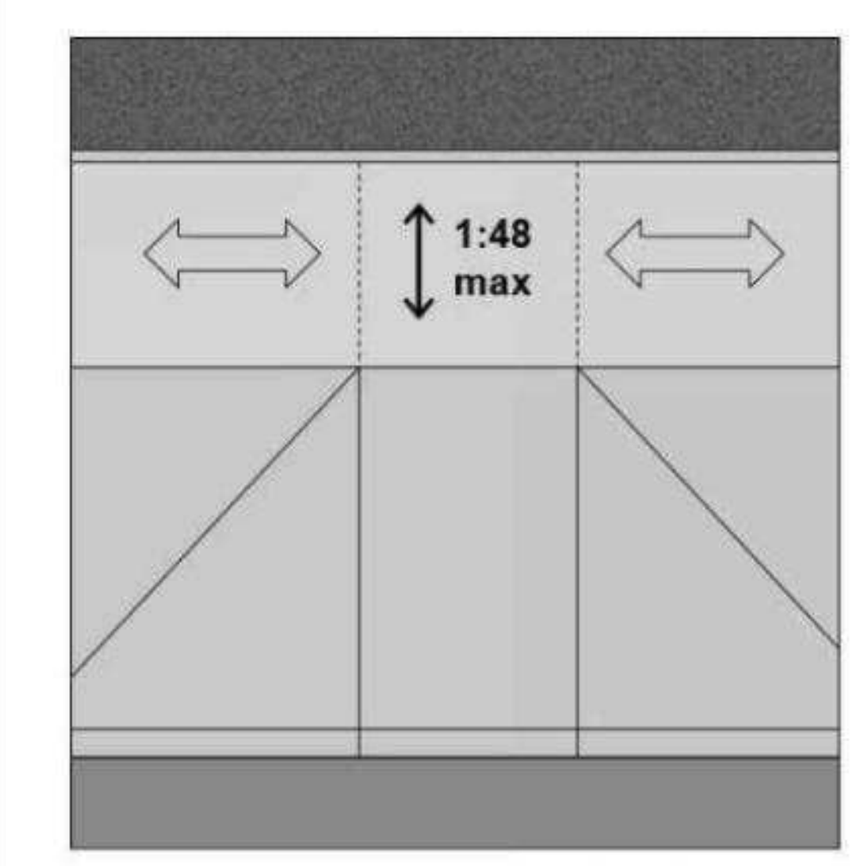

Perpendicular Accessible Route
The cross slope of perpendicular connecting routes limit the slope of the ramp top landing to 1:48 (measured parallel to the running slope).

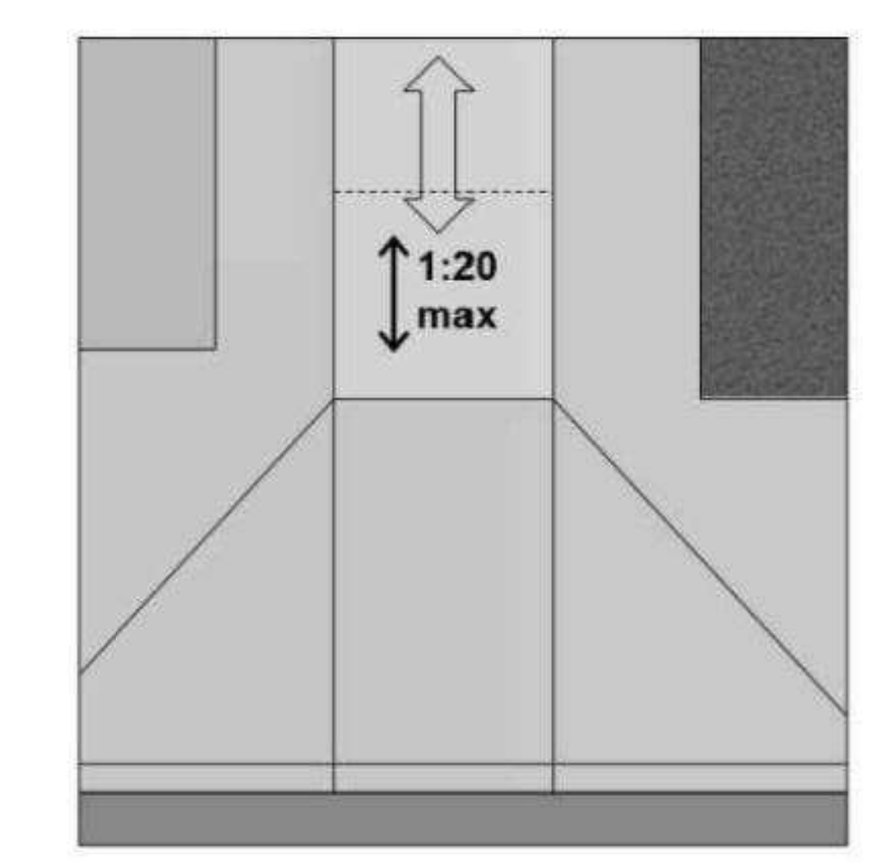

Parallel Accessible Route
If the only connecting accessible route runs parallel to the ramp run, the top landing can slope 1:20 max.

Sides of Curb Ramps [§406.3]

Curb ramps can have returned sides, but a top landing is required under all conditions to allow maneuvering to and from the run.

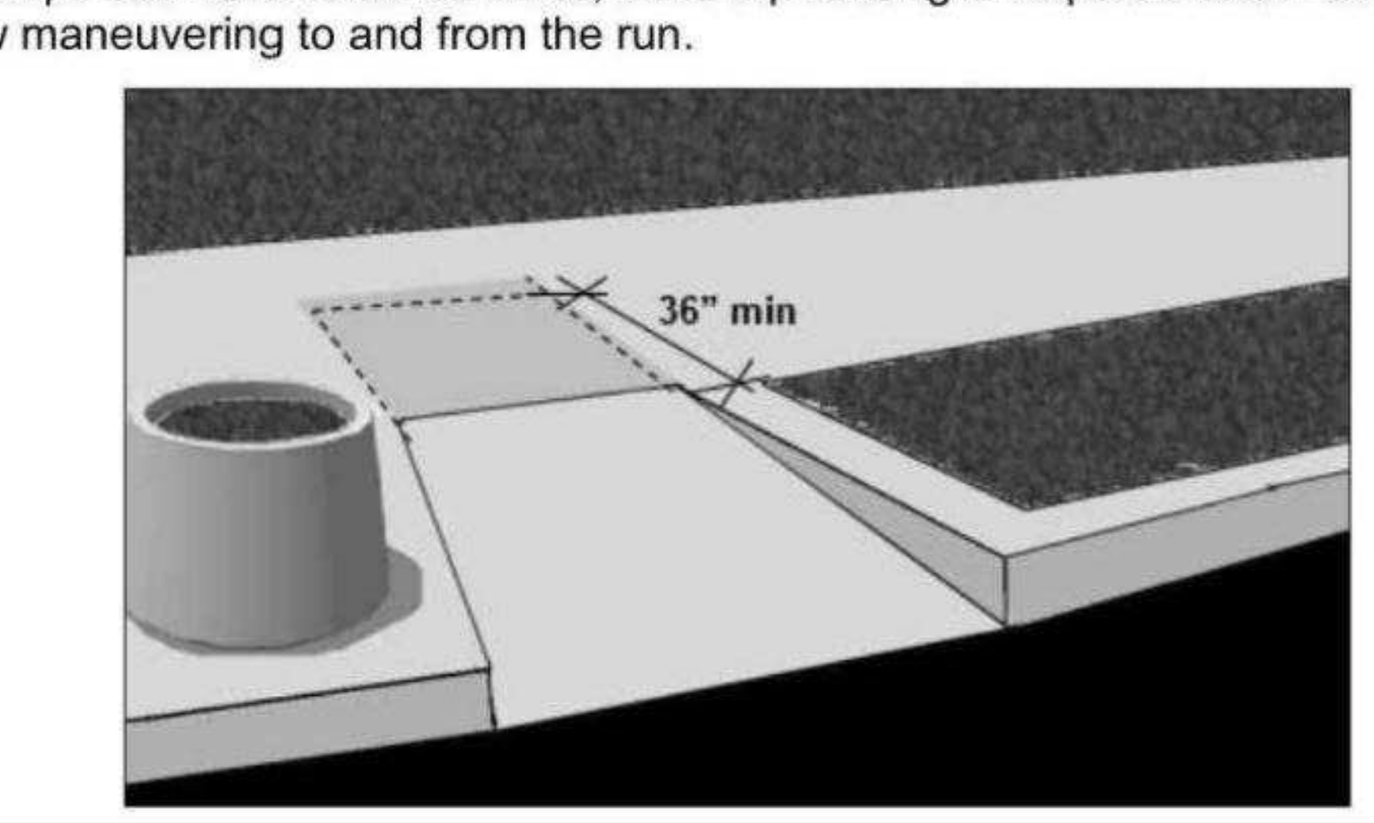

Detectable Warnings [§406.8 (DOT's Standards), §705]

Detectable warnings are required on curb ramps at transit facilities covered by DOT's Standards (facilities used by state and local governments to provide designated public transportation services, such as rail stations and bus stations). They are not required at non-transit facilities subject to DOJ's Standards. DOT also requires detectable warnings on curb ramps in projects funded by the Federal Highway Administration. New guidelines the Board is developing for public rights-of-way will address requirements for detectable warnings at curb ramps and other transitions along public streets and sidewalks where hazards to people with vision impairments are greater.

Where detectable warnings are required (or provided anyway) they must meet specifications for size, spacing, and contrast. These detailed criteria provide a distinctive texture intended to have a uniform meaning in alerting persons to the approach to vehicular areas (as well as drop-offs along rail station platforms).

Detectable Warnings on Curb Ramps

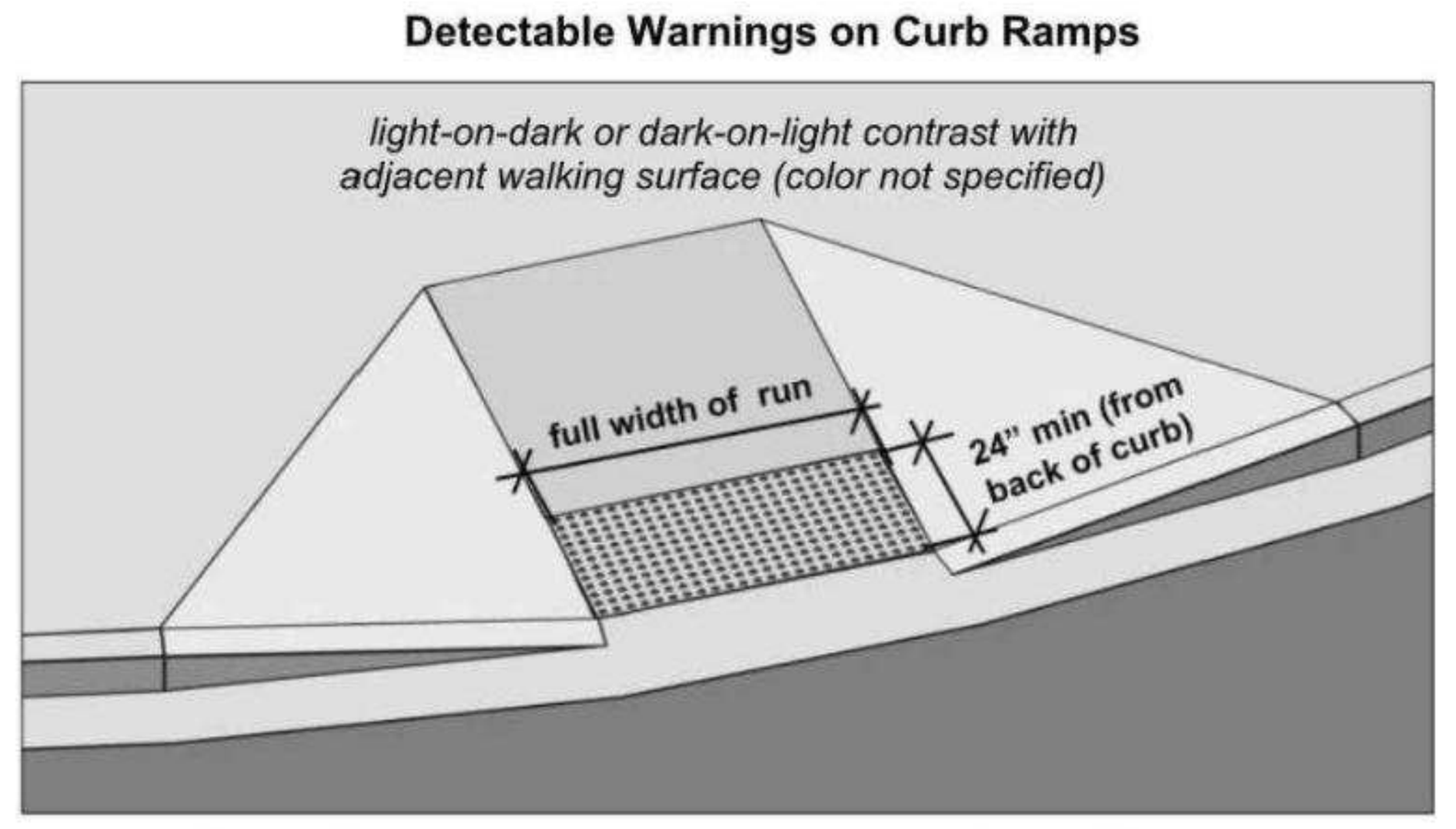

Dome Spacing

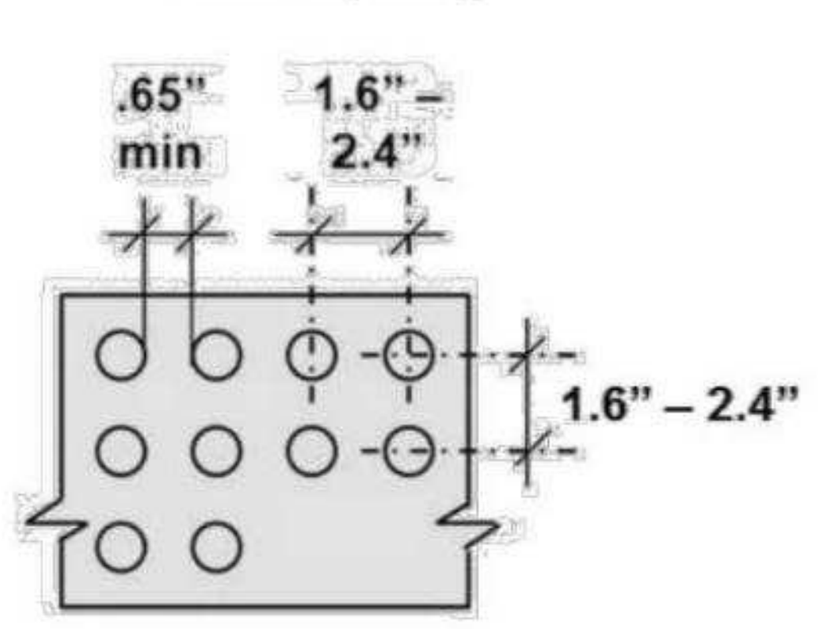

Dome Size

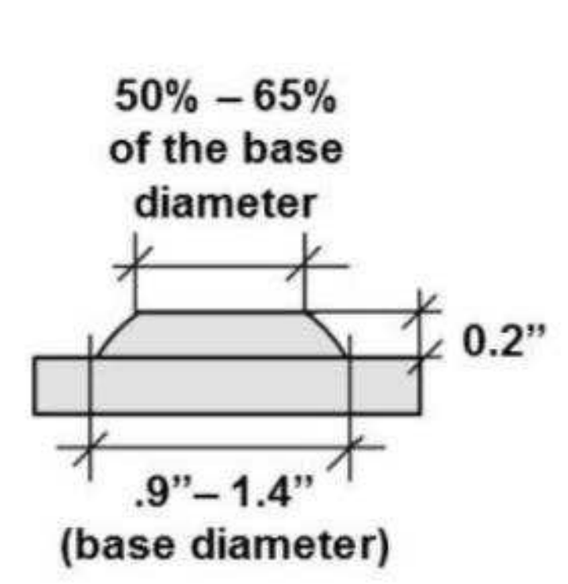

Diagonal Curb Ramps [§406.6]

If curb ramps are placed diagonally at an intersection, it is important that clear space 48" long min. is available at the bottom that is outside active vehicle traffic lanes and is located within marked crossings, where provided. A segment of curb at least 24" long beyond flares must be provided on both sides of curb ramps with side flares within marked crossings. This curb segment provides an orienting cue at crossings for people with vision impairments.

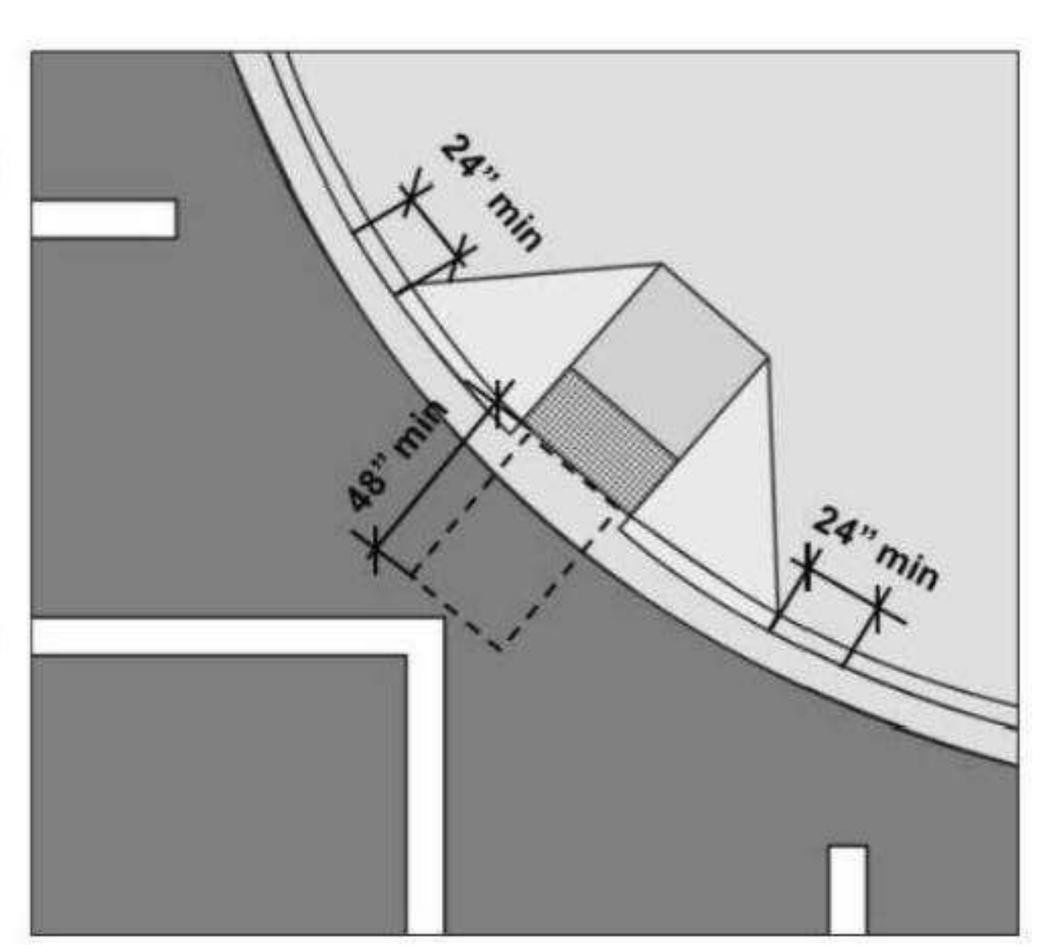

Islands [§406.7]

A 48" min. long separation is necessary between curb ramps so that people using wheelchairs can clear one ramp before negotiating the next. Level cut-throughs provide an effective alternative, especially at narrow islands that will not accommodate opposing curb ramps with a 48" separation.

Island with Curb Ramps

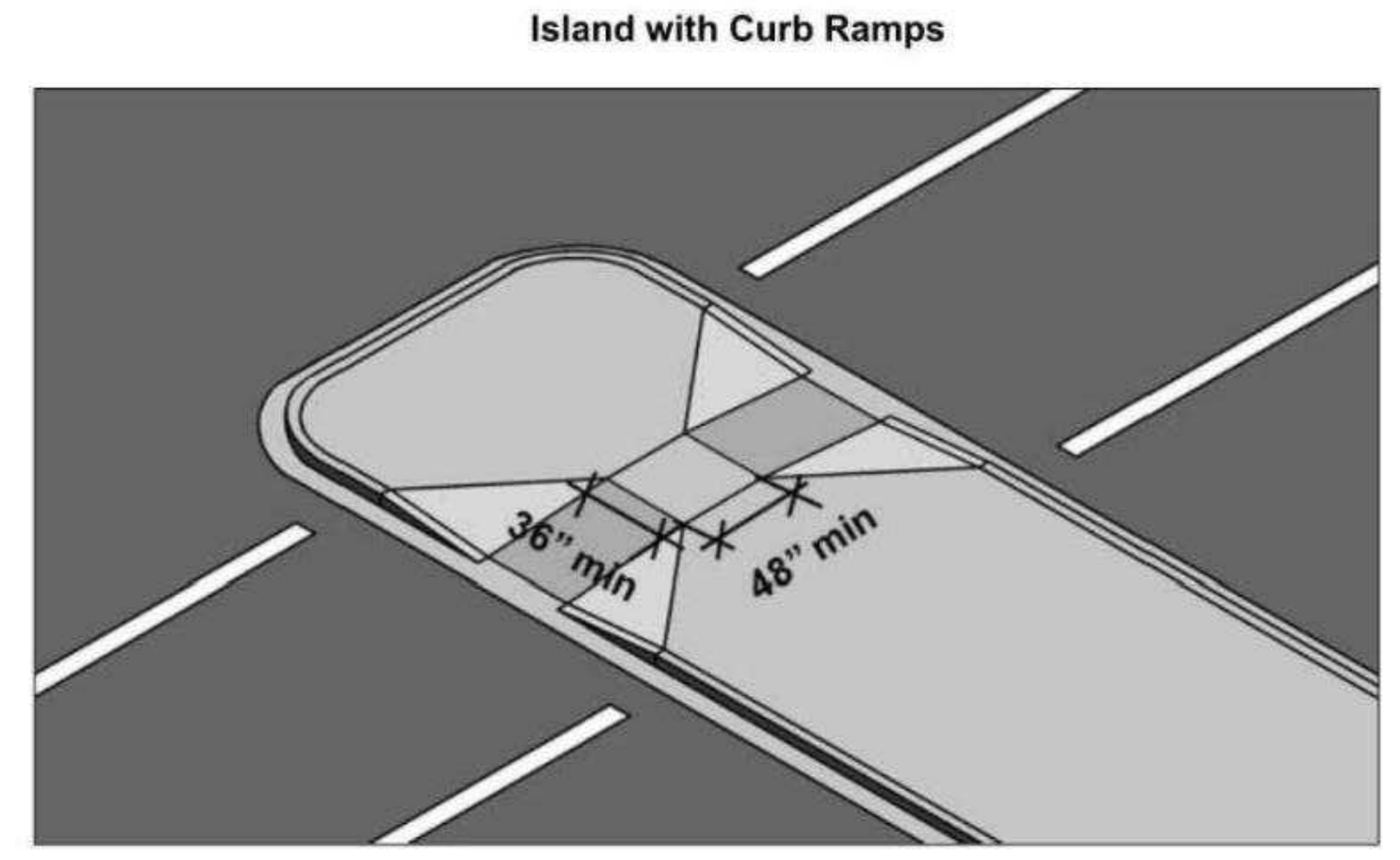

Island with Cut-through

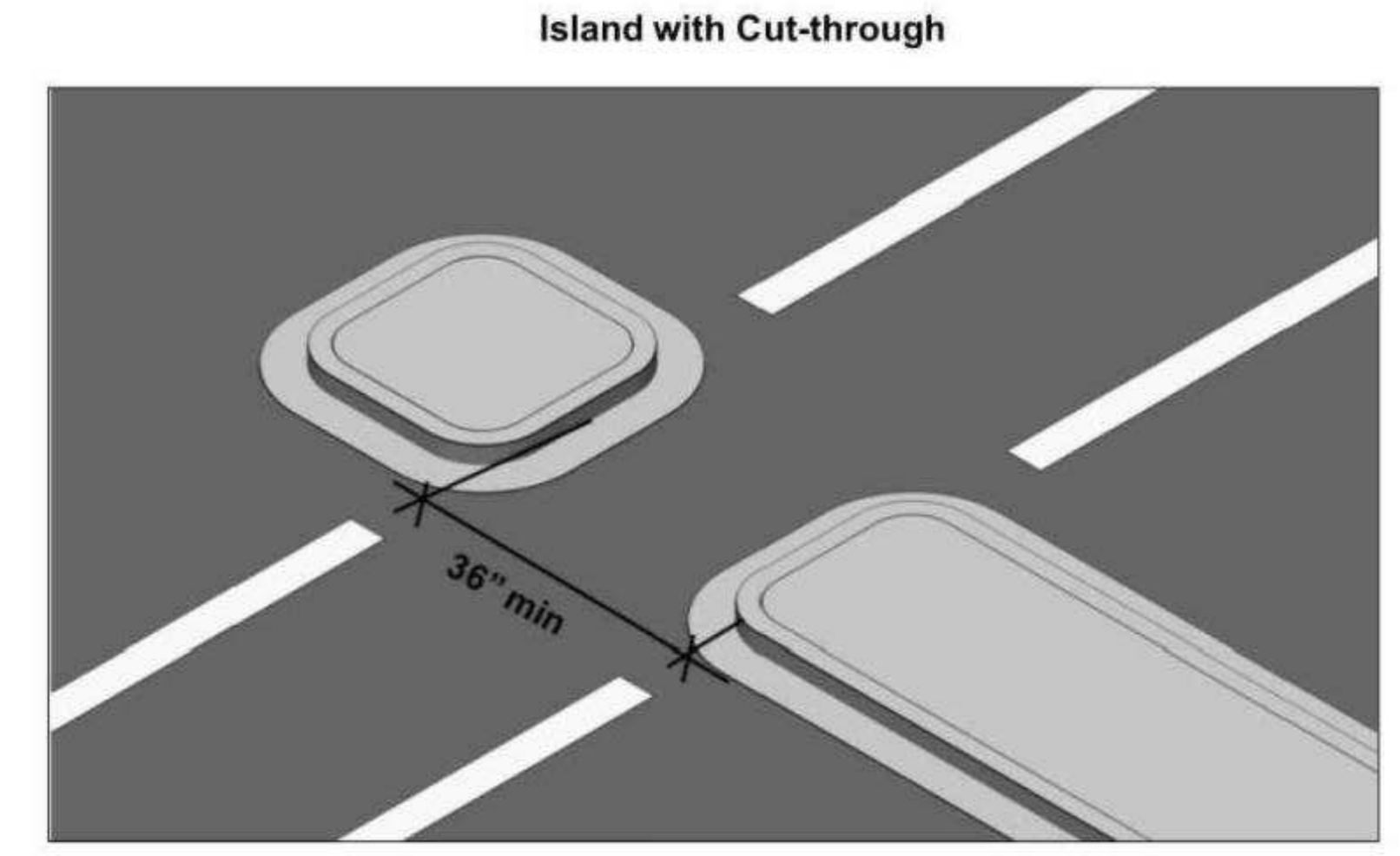

NOTES:

1. NOT ALL DETAILS SHOWN ON THIS SHEET MAY APPLY. THESE DETAILS ARE INCLUDED TO GUIDE THE CONTRACTOR DURING THE CONSTRUCTION OF A.D.A. RAMPS, CURB RAMPS AND ACCESSIBLE ROUTES.
2. THE CLIENT/CONTRACTOR SHALL BE RESPONSIBLE FOR SURVEYING AND MEASURING THE ADA LOCATIONS AND ACCESSIBLE ROUTES POST-CONSTRUCTION AND CONFIRMING COMPLIANCE.
3. IF ADA CERTIFICATIONS ARE REQUIRED BY THE EOR, A DETAILED A.D.A. AS-BUILT SURVEY WILL BE PROVIDED TO THE EOR WHICH DEMONSTRATES COMPLIANCE.

UNITED STATES ACCESS BOARD
Advancing Full Access and Inclusion for All
1331 F Street, NW • Suite 1000 • Washington, DC 20004-1111
(202) 272-0080 (v) • (202) 272-0082 (TTY) • www.access-board.gov

Scale: N/A

CONTRACTOR SHALL CONTACT SUNSHINE STATE ONE-CALL OF FLORIDA, INC. FOR LOCATION OF ALL UTILITIES TWO COMPLETE BUSINESS DAYS PRIOR TO BEGINNING CONSTRUCTION.

Know what's **below. Call** before you dig.

No.	Date	Revision - Description
1		
2		
3		
4		
5		
6		
7		

SYCAMORE ENGINEERING, INC.
8370 W. Hillsborough Ave., Suite 205
Tampa, FL 33615
Phone: 813.889.0700
Fax: 813.889.0788
e:mail: greatteam@sycamoreeng.com
• Civil Engineering
• Surveying & Mapping
• Land Planning
• Construction Management
• Landscape Architecture
F.L. C.A. # 9485 & L.B. # 7961

Project Title: **THE SHOPPES AT MERES**

Project Location: **1098 SOUTH PINELLAS AVENUE**
TARPON SPRINGS, FL 33689

Sheet Title: **HANDICAPPED ACCESSIBILITY GENERAL DETAILS**

Digitally signed by Jihad D Sabbagh
Date: 2025.05.07 16:05:23 -04'00'

J. D. ALSABBAGH
LICENSE
NO. 58995
STATE OF FLORIDA
PROFESSIONAL ENGINEER

J.D. ALSABBAGH, P.E.
FL P.E. #58995

Job No.	J0308
Drawn by:	FHG
Approved by:	JDA
Date:	04-16-2024

Sheet No.
C-12

THE DESIGN AND IDEAS INCORPORATED HEREIN, AS AN INSTRUMENT OF PROFESSIONAL SERVICE IS PROPERTY OF SYCAMORE ENGINEERING, INC. IT CAN NOT BE USED OR COPIED FOR ANY OTHER PROJECT WITHOUT WRITTEN AUTHORIZATION FROM SYCAMORE ENGINEERING, INC. DIMENSIONS SHOULD NOT BE OBTAINED BY USING SCALING OF THE PLAN. DIMENSIONS CAN BE OBTAINED BY CONTACTING SYCAMORE ENGINEERING, INC. DIRECTLY. © 2024

THE DESIGN AND IDEAS INCORPORATED HEREIN, AS AN INSTRUMENT OF PROFESSIONAL SERVICE IS PROPERTY OF SYCAMORE ENGINEERING, INC. DIMENSIONS SHOULD NOT BE OBTAINED BY USING SCALING OF THE PLAN. DIMENSIONS CAN BE OBTAINED BY CONTACTING SYCAMORE ENGINEERING, INC. DIRECTLY. © 2024

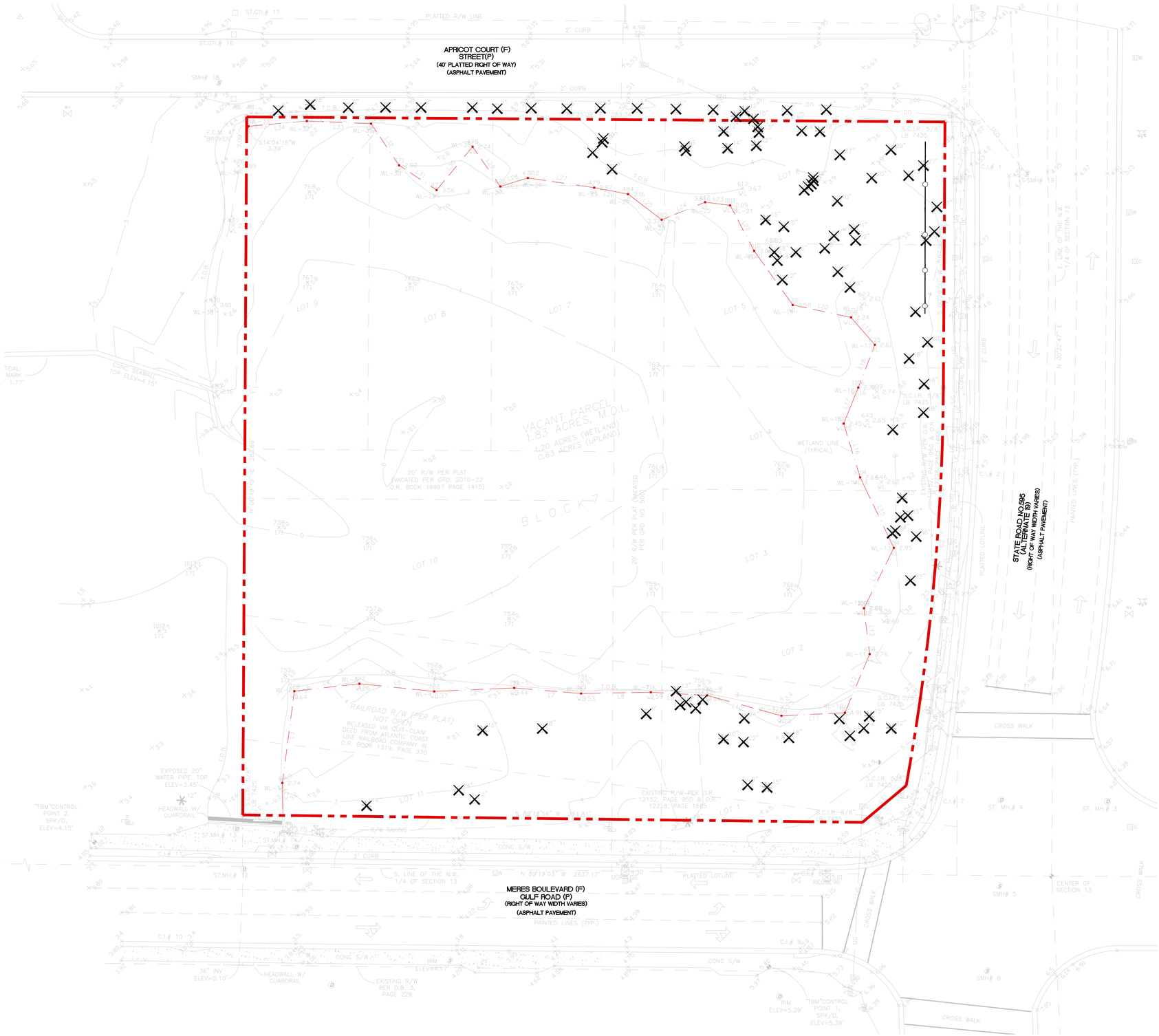

– CONTRACTOR TO MAKE SURE TO REMOVE ALL THE BRAZILIAN PEPPER TREES (SCHINUS TEREBINTHIFOLIUS) DURING THE CONSTRUCTION.

TREE REMOVAL CHART (*)

SIZE (IN.)	TOTAL INCHES
4" – < 8"	163
9" – < 15"	294
16" – < 25"	347
26" +	83
PALMS	246
TOTAL INCHES REMOVED* : 1,133"	

*DOES NOT INCLUDE INVASIVE SPECIES TO BE REMOVED.

TREE LEGEND

- 13" — *PINE TREE & DIAMETER*
- 8" — *CEDAR TREE & DIAMETER*
- 9" — *MISCELLANEOUS TREE & DIAMETER*
- 12" — *PALM TREE & DIAMETER*
- 6" — *OAK TREE & DIAMETER*
- *EXISTING TREE TO BE REMOVED*

0 20 40
Scale: 1" = 20'

CONTRACTOR SHALL CONTACT SUNSHINE STATE ONE-CALL OF FLORIDA, INC. FOR LOCATION OF ALL UTILITIES TWO COMPLETE BUSINESS DAYS PRIOR TO BEGINNING CONSTRUCTION.
811 Know what's below. Call before you dig.

No.	Date	Revision - Description
1		
2		
3		
4		
5		
6		
7		

SYCAMORE ENGINEERING, INC.
• Civil Engineering
• Surveying & Mapping
• Land Planning
• Construction Management
• Landscape Architecture
8379 W. Hillsborough Ave., Suite 205
Tampa, FL 33615
Phone: 813.889.0700
Fax: 813.889.0758
email: greatdream@sycamoreeng.com
FL C.A. # 9485 & LB. # 7961

Project Title: THE SHOPPES AT MERES
Project Location: 1098 SOUTH PINELLAS AVENUE TARPON SPRINGS, FL 33689
Sheet Title: TREE REMOVAL

Digitally signed by Jihad D Sabbagh
Date: 2025.05.07 16:05:53 -04'00'

J.D. ALSABBAGH, P.E.
FL P.E. #58995

Job No.	J0308
Drawn by:	FHG
Approved by:	JDA
Date:	04-16-2024

Sheet No.
L-1

THE DESIGN AND IDEAS INCORPORATED HEREIN, AS AN INSTRUMENT OF PROFESSIONAL SERVICE IS PROPERTY OF SYCAMORE ENGINEERING, INC. DIMENSIONS SHOULD NOT BE OBTAINED BY USING SCALING OF THE PLAN. DIMENSIONS CAN BE OBTAINED BY CONTACTING SYCAMORE ENGINEERING, INC. DIRECTLY. © 2024
IT CAN NOT BE USED OR COPIED FOR ANY OTHER PROJECT WITHOUT WRITTEN AUTHORIZATION FROM SYCAMORE ENGINEERING, INC.

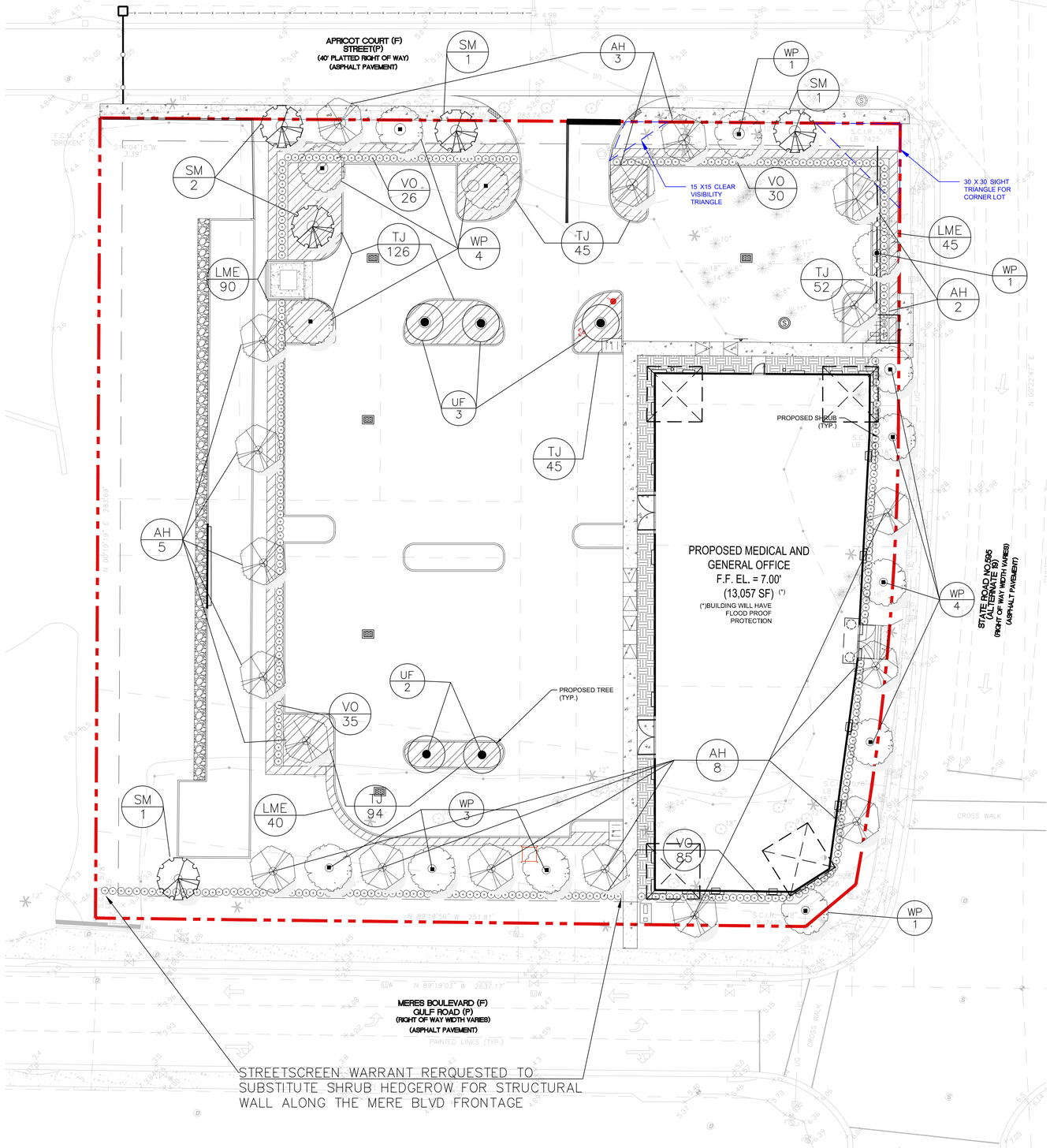

MATERIALS LIST

SHADE TREES — Different species each 5 trees (UP TO 8 SPECIES MIN. WITH 40 TREES)

Symbol	No	Scientific Name	Common Name	Size Requirements	Native Florida	Drought Tolerant
WP	14	Podocarpus Gracilior	Weeping Podocarpus	12' Height Minimum (Evergreen)	NO	YES
AH	17	Ilex opaca	American Holly	12' Height Minimum (EverGreen)	YES	YES
SM	05	Magnolia Grandiflora	Southern Magnolia	12' Height Minimum (Evergreen)	YES	YES
UF	05	Ulmus Americana Floridana	Florida Elm	B/B, 10' oah x 4" spr, 4" cal	YES	YES

Palms may be substituted, 3 palms for 1 shade tree, max. 30% Clusters of 3' – 8' on center

SHRUBS — MAX 25% EACH SPECIES BY QUANTITY (= MIN. 4 SPECIES)

Symbol	No	Scientific Name	Common Name	Size Requirements	Native Florida	Drought Tolerant
VO	175	Viburnum obovatum	Walter's Viburnum	min. 3 gallon, min. 42" ht, 30" o.c.	YES	YES

Max. 30% of required landscaped area may be grassed

GROUNDCOVER — MAX 25% EACH SPECIES BY QUANTITY (= MIN. 4 SPECIES)

Symbol	No	Scientific Name	Common Name	Size Requirements	Native Florida	Drought Tolerant
LME	175	Liriope muscari 'Emerald Goddess'	Emerald Goddess Liriope	1 gallon, 24" o.c.	NO	YES
TJ	362	Trachelospermum jasminoides	Confederate Jasmine	1 gallon, 24" o.c.	YES	YES
SOD		Paspalum notatum "Argentine"	Bahia Sod	95% Weed/Disease-free, Laid tight, Rolled		
MULCH		Grade 'A' Pine bark nugget		Mulch to 3" depth		

Spaced to present finished appearance & obtain a reasonably complete coverage in one year
Max 30% of required landscaped area may be grassed – Note type and percent on plans

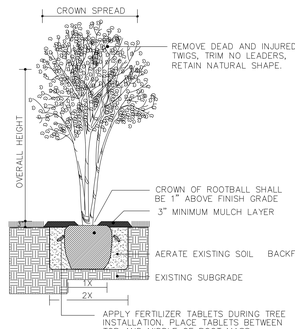

MULTI-STEM TREE DETAIL

CONTRACTOR SHALL REMOVE STAKING AND GUYING MATERIALS AFTER ONE GROWING SEASON.

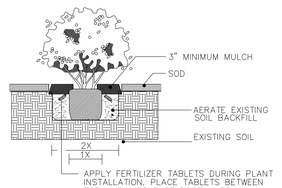

SHRUB PLANTING DETAIL

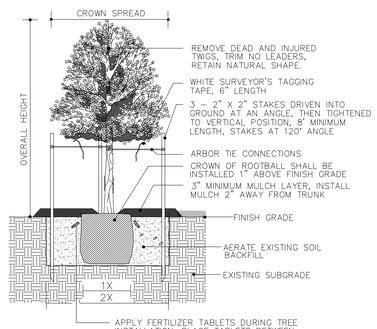

TREE STAKING AND PLANTING DETAIL

CONTRACTOR SHALL REMOVE STAKING AND GUYING MATERIALS AFTER ONE GROWING SEASON.

GENERAL LANDSCAPE NOTES:

1. ALL LANDSCAPE MATERIAL SHALL BE FLA. NO. 1 GRADE OR BETTER, AS SPECIFIED IN GRADES AND STANDARDS FOR NURSERY PLANTS, PARTS I AND II, BY DIVISION OF PLANT INDUSTRY, FLORIDA DEPARTMENT OF AGRICULTURE AND CONSUMER SERVICES, AND SHALL CONFORM TO CURRENT AMERICAN ASSOCIATION OF NURSERYMAN STANDARDS FOR NURSERY STOCK. LANDSCAPE MATERIAL SHALL BE PLANTED ACCORDING TO SOUND NURSERY PRACTICES.
2. SHRUBS SHALL NOT ADVERSELY IMPACT EXISTING TREE ROOT SYSTEMS AND SHALL BE FIELD ADJUSTED IF NECESSARY.
3. ALL REQUIRED TREES SHALL BE A MINIMUM OF 6' OVER ALL HEIGHT, HAVE A MINIMUM 1 AND 1/2" DIAMETER MEASURED 12" ABOVE GROUND, AND A MINIMUM CROWN OF 2 FEET. ADJUST TREE LOCATIONS AS NECESSARY TO AVOID UTILITIES, OBSTRUCTIONS, ETC. SEE MATERIALS LIST FOR EXACT SPECIFICATIONS.
4. ALL REQUIRED TREES SHALL BE LOCATED A MINIMUM OF 5 FEET FROM IMPERVIOUS SURFACES, ALL SHRUBS 2 FEET.
5. AN AUTOMATIC UNDERGROUND IRRIGATION SYSTEM SHALL BE INSTALLED TO MAINTAIN THE LANDSCAPE AREA IN A HEALTHY MANNER AND PROVIDE 100% COVERAGE. REFER TO GENERAL IRRIGATION NOTES.
6. THE CONTRACTOR SHALL BE RESPONSIBLE FOR THE CLEAN UP OF PREMISES AND REMOVAL OF ALL DISCARDED AND SURPLUS MATERIALS, AND RUBBISH.
7. VERIFY THE LOCATIONS OF EXISTING TREES, LAWNS, AND SHRUBS. REMOVE EXTRANEOUS MATERIALS SUCH AS ROCKS, BRANCHES, BUILDING MATERIALS OR UNACCEPTABLE SOILS PRIOR TO PLANTING SOD, TREES, AND SHRUBS , WHERE ENCOUNTERED.
8. CONTRACTOR SHALL BECOME ACQUAINTED WITH THE RELATED PAVING, SITE GRADING , AND ALL UTILITIES (INCLUDING WATER, SEWER, AND ELECTRICAL SUPPLY) TO PRECLUDE ANY MISUNDERSTANDINGS AND ENSURE A TROUBLE FREE INSTALLATION.
9. THE EXACT LOCATION OF ALL EXISTING STRUCTURES, UNDERGROUND UTILITIES , AND PIPES MAY NOT BE AS INDICATED ON DRAWINGS. THE CONTRACTOR SHALL DETERMINE THE LOCATION OF THESE ITEMS AND SHALL CONDUCT HIS WORK IN A MANNER TO PREVENT INTERRUPTION OR DAMAGE TO EXISTING SYSTEMS WHICH MUST REMAIN OPERATIONAL. CONTRACTOR SHALL PROTECT EXISTING STRUCTURES AND UTILITY SERVICES WHICH MUST REMAIN OPERATIONAL AND SHALL BE RESPONSIBLE FOR THEIR REPLACEMENT IF DAMAGED BY HIM.
10. CONTRACTOR SHALL CALL SUNSHINE STATE ONE-CALL AT LEAST 48 HOURS PRIOR TO DIGGING. (1-800-432-4770).
11. QUANTITIES ON PLAN TAKE PRECEDENCE OVER MATERIALS LIST. QUANTITIES ON MATERIALS LIST ARE PROVIDED AS A COURTESY ONLY.
12. ALL PLANT MATERIAL MUST BE 10' OVER SIDEWALK AND 16' OVER ROADWAY UNOBSTRUCTED VERTICAL CLEARANCE AT PLANTING.
13. ALL BRAZILIAN PEPPER TREES (SCHINUS TEREBINTHIFOLIUS) SHALL BE REMOVED DURING THE SITE CONSTRUCTION PROCESS. A SITE INSPECTION WILL BE CONDUCTED TO ENSURE THAT ALL BRAZILIAN PEPPER TREES (SCHINUS TEREBINTHIFOLIUS) HAVE BEEN REMOVED. AFTER THE ISSUANCE OF THE CERTIFICATE OF OCCUPANCY, RE-GROWTH OF BRAZILIAN PEPPER TREES (SCHINUS TEREBINTHIFOLIUS) SHALL BE CONTROLLED IN PERPETUITY BY THE PROPERTY OWNER.

A / 1 — PLANT SYMBOL / QTY. OF PLANTS

LANDSCAPE REQUIREMENTS *

LANDSCAPE DATA

PERIMETER LANDSCAPE REQUIREMENTS
MINIMUM 8' WIDE BUFFER BETWEEN PARKING LOT AND RIGHT OF WAY
(1) TREE / 30 LF AND CONTINUOUS HEDGE

MERES BLVD. – 275' / 30 = (9) TREES

S. PINELLAS AVE. – 270' / 30 = (9) TREES

APRICOT COURT STREET – 283' / 30 = (9) TREES

INTERIOR LANDSCAPE REQUIREMENTS
MIN. (1) TREE PER INTERIOR LANDSCAPE AREAS AND ISLANDS

MINIMUM TREE PLANTING
1 TREE PER 2,000 SF, OR PORTION THEREOF

79,557 SF / 2,000 SF = (40) TREES AT 1-1/2" CAL. REQUIRED
(41) TREES PROVIDED (36 EVERGREEN & 5- 4" CAL.)

ADDITIONAL NOTES

AREAS NOT PLANTED WITH TREES, SHRUBS, OR GROUNDCOVERS SHALL BE SODDED WITH BAHIA SOD.

CONTRACTOR SHALL INSTALL NEW IRRIGATION SYSTEM TO PROVIDE 100% COVERAGE TO ALL LANDSCAPE AREAS.

* AS PER CITY OF TARPON SPRINGS LANDSCAPE CODE REQUIREMENTS

0 20 40
Scale: 1" 20

CONTRACTOR SHALL CONTACT SUNSHINE STATE ONE-CALL OF FLORIDA, INC. FOR LOCATION OF ALL UTILITIES TWO COMPLETE BUSINESS DAYS PRIOR TO BEGINNING CONSTRUCTION.
811
Know what's below. Call before you dig.

No.	Date	Revision - Description
1	10-14-19	Revised Landscape Per Update Site Layout

SYCAMORE ENGINEERING, INC.
• Civil Engineering
• Land Use Planning
• Land Planning
• Construction Management
• Landscape Architecture
8370 W. Hillsborough Ave., Suite 205
Tampa, FL 33615
Phone: 813.889.0700
Fax: 813.889.0788
email: gradison@sycamoreeng.com
F.L.C.A. # 0665 & F.B. # 7961

Project Title: THE SHOPPES AT MERES
Project Location: 1098 SOUTH PINELLAS AVENUE TARPON SPRINGS, FL 33689
Sheet Title: LANDSCAPE DETAILS

Digitally signed by Jihad D Sabbagh
Date: 2025.05.07 16:06:24 -04'00'

J.D. ALSABBAGH, P.E.
FL P.E. #58995

Job No.	J0308
Drawn by:	IS
Approved by:	JDA
Date:	11-25-19

Sheet No.
L-2

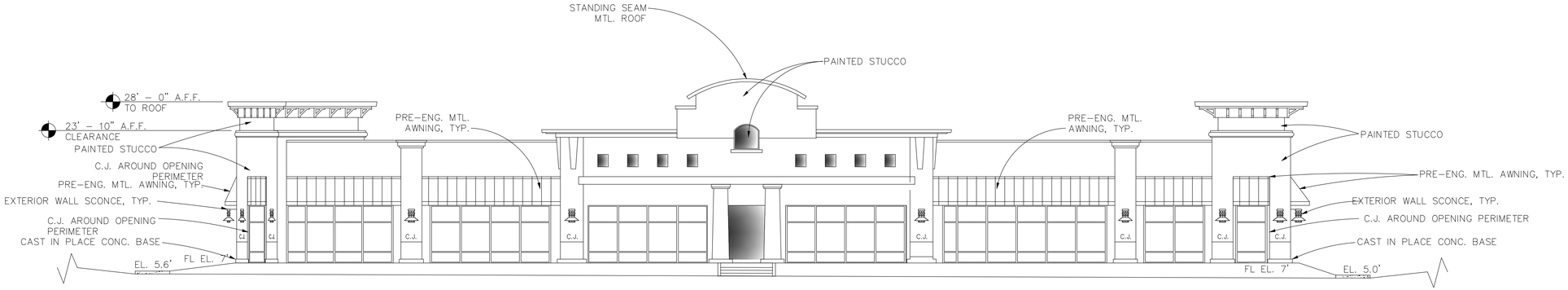

EAST ELEVATION
1/8" = 1"

D MEDICAL AND
RAL OFFICE
EL. = 7.00'
,057 SF) (*)
WILL HAVE
OOD PROOF
ROTECTION

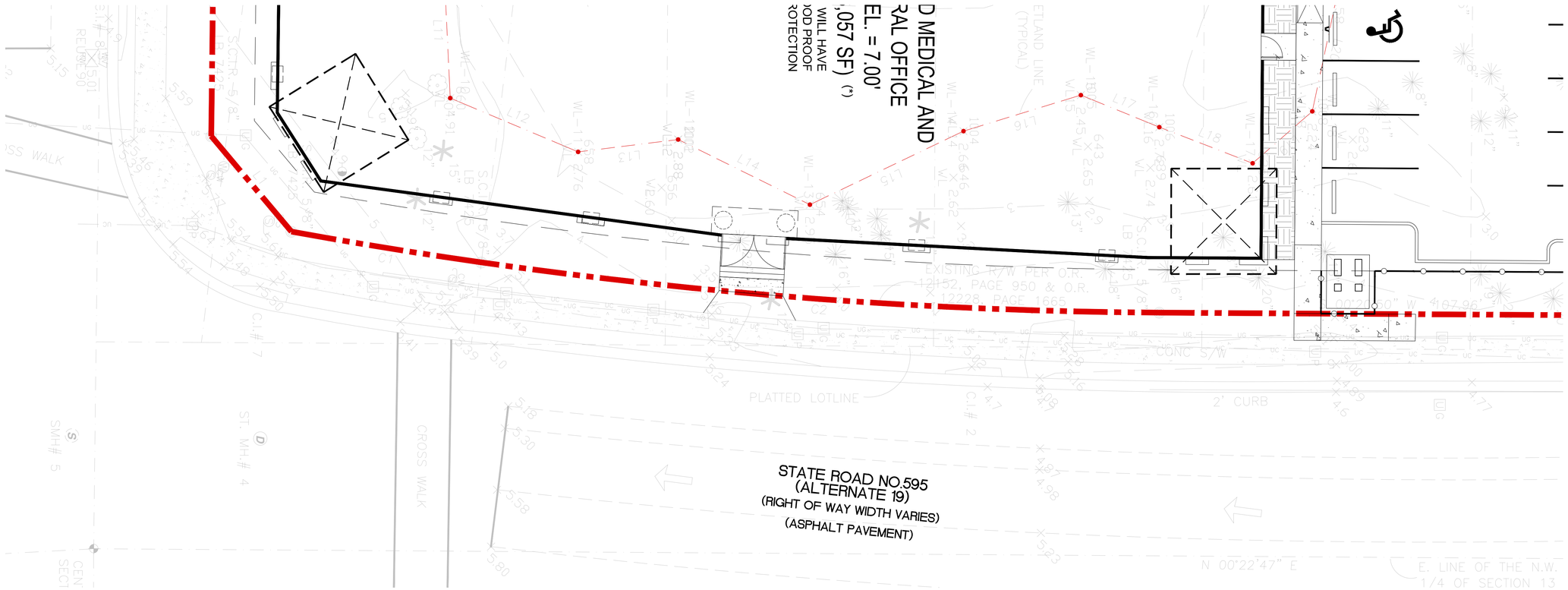

EAST SIDE PLAN VIEW
1/8" = 1"

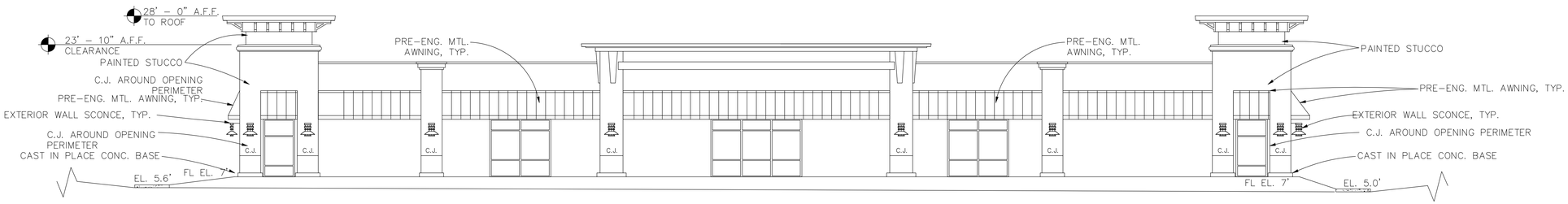

WEST ELEVATION
1/8" = 1"

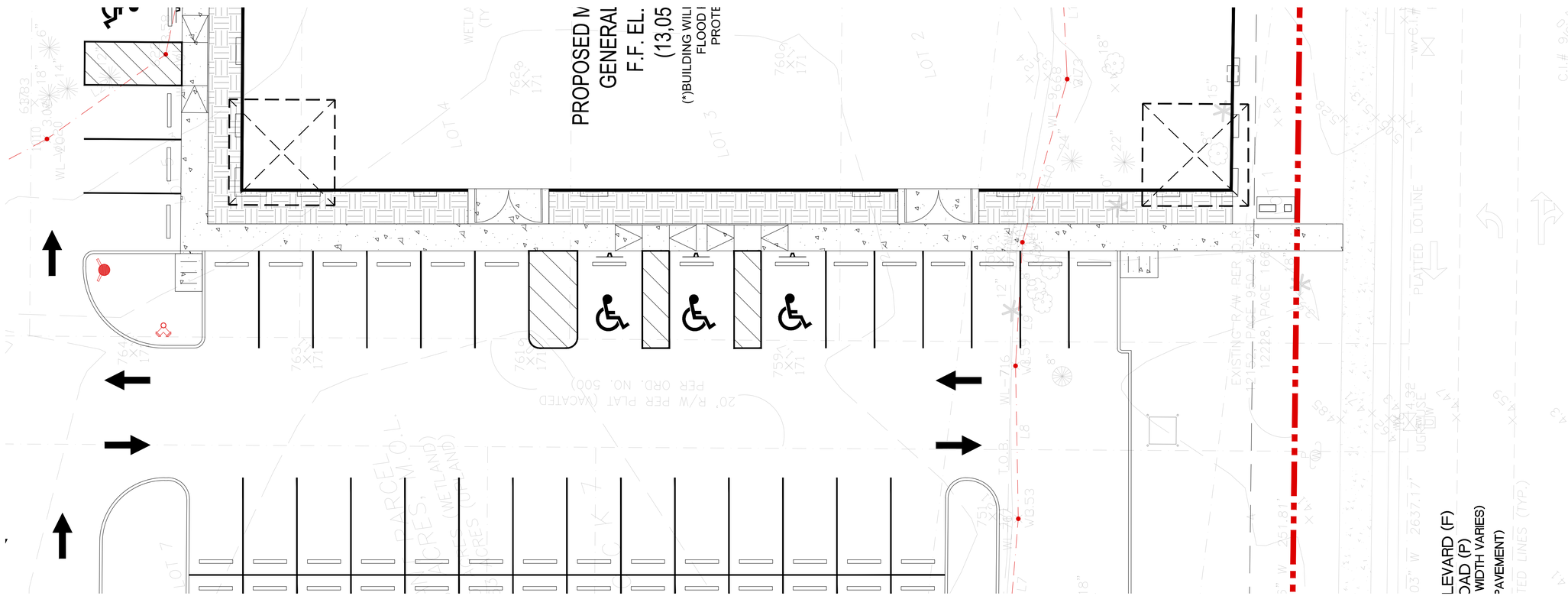

WEST SIDE PLAN VIEW
1/8" = 1"



SOUTH ELEVATION
1/8" = 1"

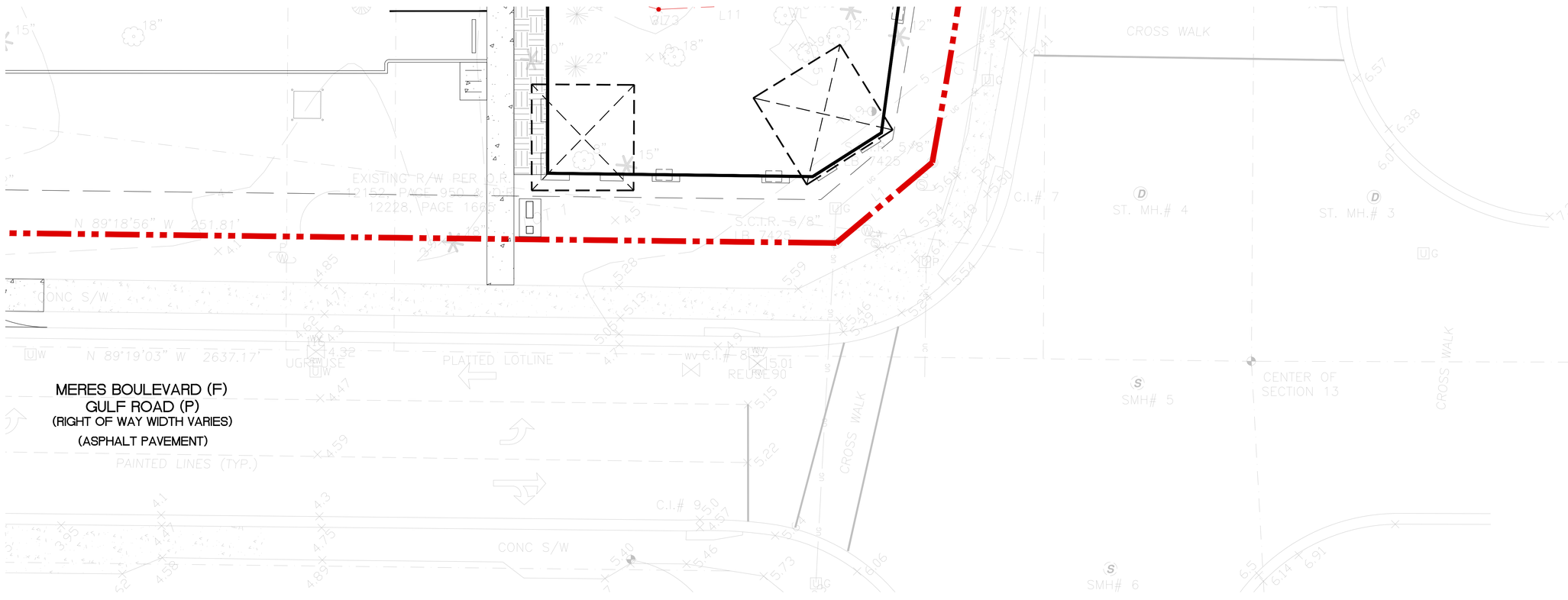

SOUTH SIDE PLAN VIEW
1/8" = 1"

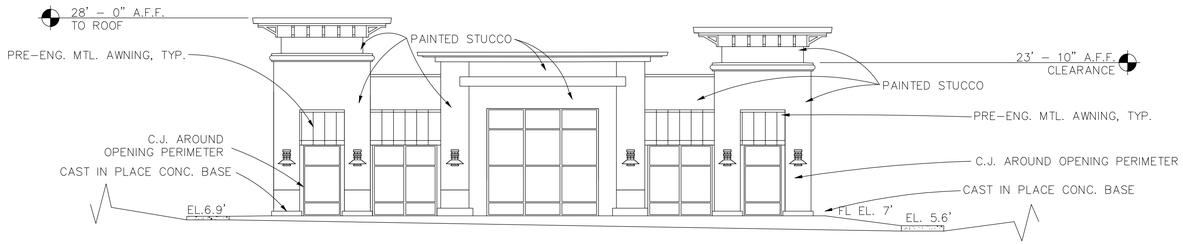

NORTH ELEVATION
1/8" = 1"

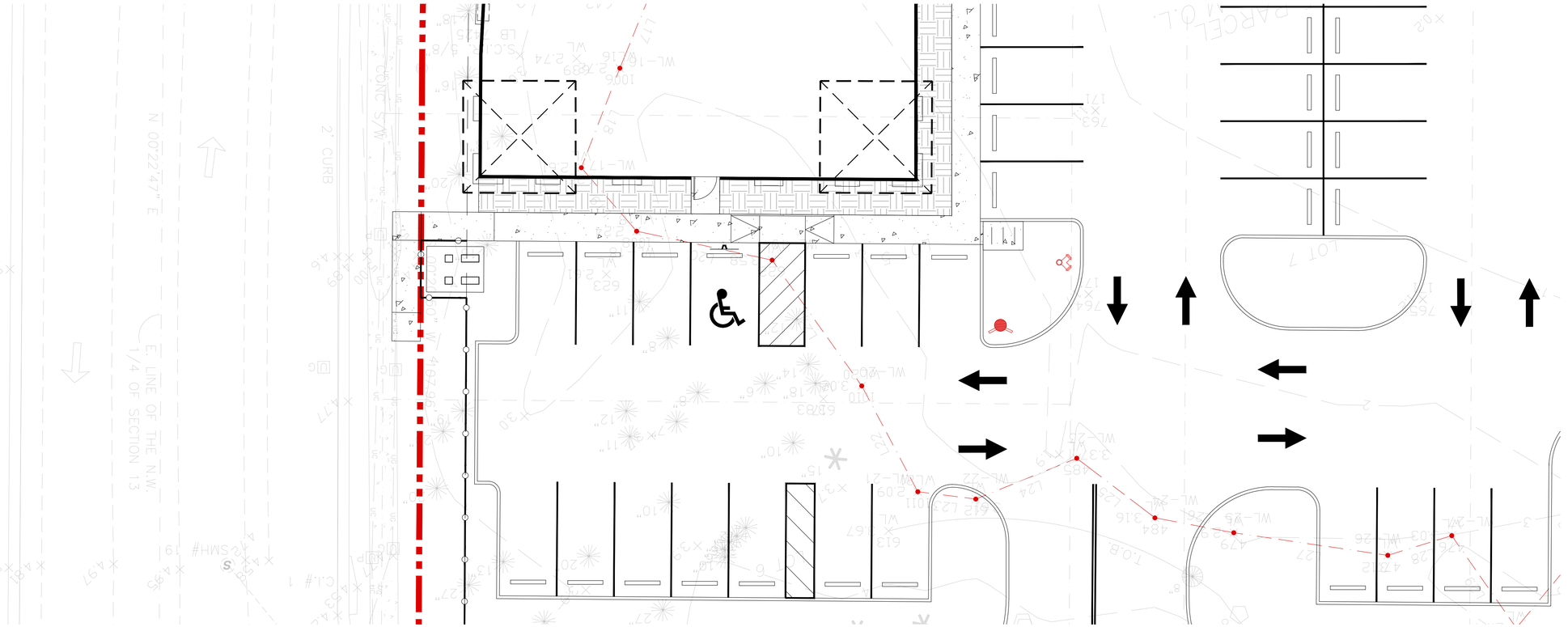

NORTH SIDE PLAN VIEW
1/8" = 1"

Sycamore Engineering, Inc.
8370 W. Hillsborough Avenue, Suite 205
Tampa, Florida 33615

July 13, 2010

Attention: Mr. J.D. Alsabbagh, P.E.

RE: Report of the Preliminary Soils Investigation
U.S. Alternate 19 & Meres Boulevard
Tarpon Springs, Florida
Our File: DES 106582

Dear Mr. Alsabbagh:

Pursuant to your authorization, **DRIGGERS ENGINEERING SERVICES, INC.** has completed the preliminary limited subsurface soils investigation on the subject site. Included herein are the results of our field and laboratory testing.

INVESTIGATION PROGRAM

SHALLOW SOIL BORINGS - Plate I of the attachments identifies the respective positioning of two (2) classification or hand auger borings conducted at the requested locations on the subject site. The auger borings were advanced to the proposed depth of 7 feet below present grade.

The hand augers were sampled continuously from below grade to the completion depth to check for shallow deleterious materials that could impact structure performance. A log of each boring is presented in the attachments.

LABORATORY TESTING - A limited laboratory classification testing program was undertaken to aid in characterizing the engineering properties of the subsurface soils. Our laboratory tests included three (3) organic content tests and one (1) grainsize or sieve analysis. The results of our laboratory tests are presented on the Summary of Test Results in the report attachments.

GENERALIZED SUBSURFACE CONDITIONS

SOIL CONDITIONS - The shallow borings identified variable conditions at the two (2) requested boring locations. Boring HA-1 sampled a surficial brown and gray slightly silty fine sand to a depth of 3 feet where a dark brown highly organic silty fine sand was sampled. The highly organic zone continued to a depth of about 4.3 feet. The highly organic zone was underlain by a dark brown slightly silty sand which was followed by a cream colored calcareous clay interbedded with brown and gray sandy clay to the completion depth of the boring. Some limestone fragments were also observed within the calcareous unit. Boring HA-2 identified surficial organic, silty sands to a depth of about 2 feet. Below 2 feet, the boring penetrated a dark brown and brown fine sand to the completion depth of the boring 7 feet below grade.

GROUNDWATER CONDITIONS - Due to the very low elevation at the boring locations, the ground surface was below the water level at the time of the investigation. Water levels in this area are expected to fluctuate in response to tidal fluctuations as well as probable runoff from surrounding roadway drainage, etc. At the time of our investigation, the approximate water depth was about 1 foot above grade at the boring locations.

EVALUATION OF PRELIMINARY FINDINGS

It is our understanding the concept plan will include placement of some 6 to 7 feet of fill within the site followed by construction of relatively lightly-loaded structures. Our limited soils investigation has identified soils with moderate to excessive organic content within the upper 2 to 4 feet below present grade. However, it should be recognized that only two (2) shallow borings have been conducted and they suggest variable conditions may be present. For example, boring HA-1 sampled a highly organic zone which possessed an organic content on the order of 23% which is considered excessive. However, the testing conducted at HA-2 indicates soils with an organic content of less than 7% which is considered marginal. The location of this site suggests that the current low-lying area was likely at one time connected to the wetland area to the east of US Alt 19 and also likely connected to Whitcomb Bayou to the west of the site. The wetland area to the east suggests the soils in that area are represented by the Terra Ceia muck or Samsula soil series. These

soil series are characterized by surficial, highly organic soils (muck) which could have organic contents as high as 90 percent and range in thickness from 3 to 4 feet.

Soils with elevated or excessive organic content have the potential for producing excessive immediate and long-term settlement related to the compression of the organic mass when subjected to stresses imposed by fill and structural loads. The compression of highly organic soils generally consists of two (2) phases, a primary and secondary phase. The primary component occurs rather quickly, following the imposition of load. However, the secondary component (sometimes referred to as "creep") can be as great or greater than the primary component but occurs over a significant length of time which could be on the order of years or even decades. Highly organic soils also have a component of decomposition related settlement that occurs over time.

Accordingly, where highly organic soils occur beneath planned structures to a significant lateral and vertical extent, the organic soils will require removal from beneath the foundation areas plus a margin outside the foundation perimeter followed by replacement with suitable structural fill. Otherwise, a pile foundation system, including a pile supported slab would be necessary. However, generally for lightly-loaded structures, removal of the organic soils represents the most economical alternative. Methods utilized to attempt to control differential settlements such as mat foundations or geogrid mats below conventional foundations are generally not recommended due to the significant variation in muck thickness that could occur over a large areal extent that may result in significant differential settlement or structure tilting. These techniques are generally only considered if fairly uniform conditions are identified or if the non-uniform areas are of limited areal extent. Even with these other techniques that attempt to control differential settlements, one must still be willing to accept significant total settlements when the highly organic soils are left in place.

Therefore, based on the above, we would suggest budgeting at this time for the complete removal of the highly organic soils to depths that could exceed 4 feet below present grade at least beneath the planned structures plus a margin. This will naturally require a program of dewatering in order to facilitate the over-excavation and replacement of the unsuitable soils. However, it would be prudent to conduct addition probe borings to investigate the actual requirements of removal on a structure by structure basis. The need for removal of highly organic soils beneath pavements and other ancillary structures or pads will be based on the specific conditions in those areas as well as the owner's willingness to accept settlement and potential future maintenance requirements of pavements and slabs.

RECOMMENDATIONS FOR FURTHER STUDY - It must again be recognized that the above discussion is based on a very limited subsurface investigation. The evaluation is considered conservative and is based on the conditions identified in the limited investigation combined with expected conditions within wetland features based on the soils maps information and local experience. Accordingly, we would recommend that addition probes be conducted throughout the site perhaps on a 50-foot grid spacing to better ascertain the probable depths and quantities of soils requiring removal. Depending on the results of the probes, some modifications to the site plan may also be possible that could lessen the volume of soils requiring removal.

Also, Standard Penetration Test (SPT) borings will be necessary within the structure areas in order to provide specific recommendations relative to subgrade preparation and foundation design. SPT borings provide penetration resistance data reflective of the strength and bearing capability of the soils

DRIGGERS ENGINEERING SERVICES, INC. appreciates this opportunity to serve you at this preliminary stage. Should you have any questions concerning the results of our findings, please do not hesitate to contact the undersigned at your convenience.

Respectfully submitted,
DRIGGERS ENGINEERING SERVICES, INC.

Wayne S. Driggers, P.E.
Senior Geotechnical Engineer
FL Registration No. 58013



F. Jaime Driggers, P.E.
President
FL Registration No. 16989

WSD-REP\106582
Copies submitted: (3)

APPENDIX

PLATE I - BORING LOCATION PLAN

HAND AUGER BORING LOGS

SUMMARY OF LABORATORY TEST RESULTS

GRAINSIZE ANALYSIS

PLATE I - BORING LOCATION PLAN

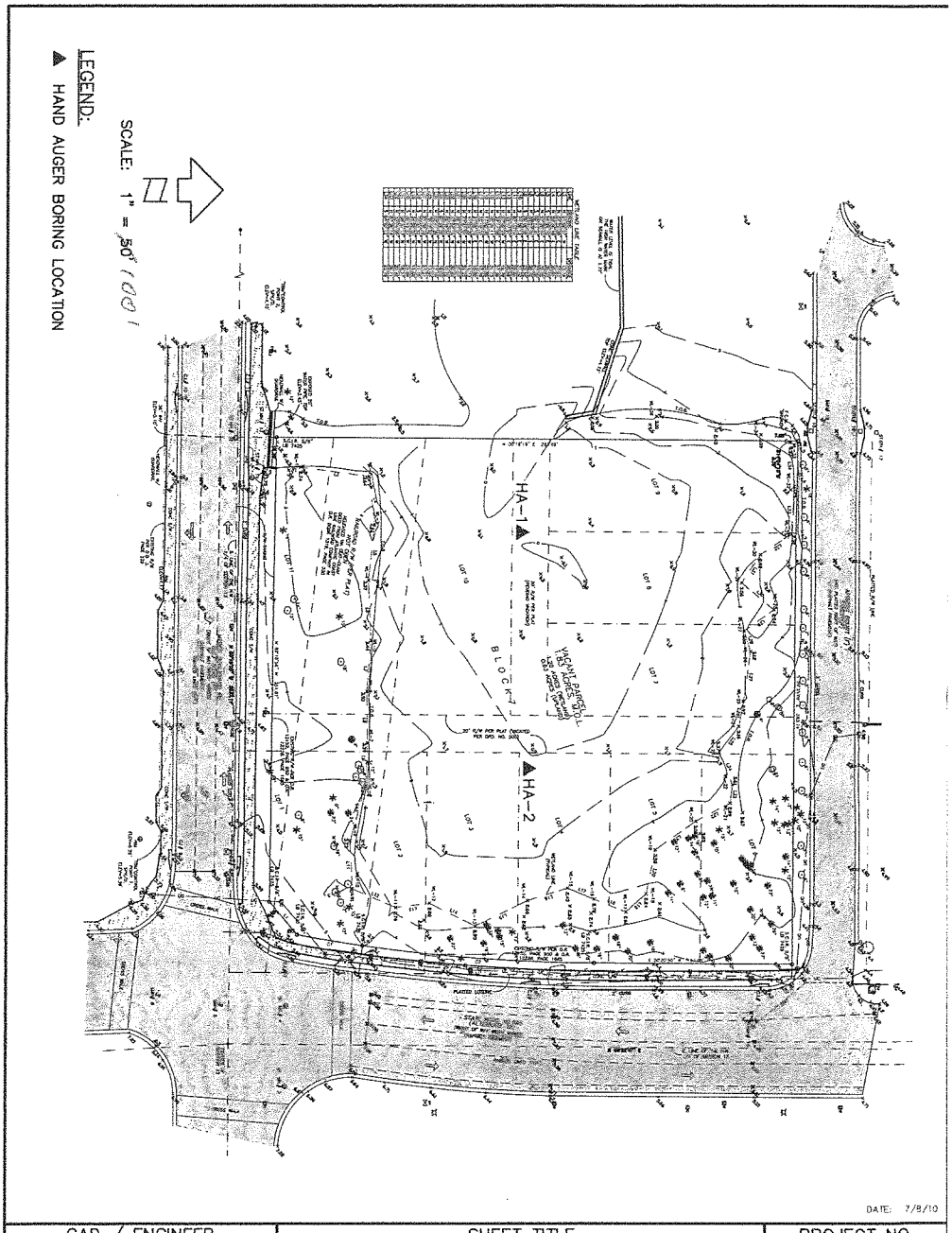

DATE: 7/8/10

CAD / ENGINEER	SHEET TITLE	PROJECT NO.
R.D.B. / W.S.D.	BORING LOCATION PLAN	DES 106582
PREPARED BY	PROJECT NAME	SHEET NO.
DRIGGERS ENGINEERING SERVICES, INCORPORATED	U.S. ALTERNATE 19 & MERES BOULEVARD TARPON SPRINGS, FLORIDA	PLATE 1

HAND AUGER BORING LOGS

DRIGGERS ENGINEERING SERVICES INCORPORATED

HAND AUGER BORING LOG

PROJECT: U.S. Alternate 19 & Meres Boulevard, Tarpon Springs, Florida, Project No.: DES 106582		**CLIENT:** Sycamore Engineering, Inc.	
		WATER TABLE: +1.0'	**DATE:** 7/1/10
TECHNICIAN: S.F./M.J.		**DATE:** 7/1/10	**COMPLETION DEPTH:** 7.0'
LOCATION: See Plate I		**TEST NUMBER:** HA-1	

ELEV. (FT)	DESCRIPTION	DEPTH (FT)	SYMBOL	REMARKS
0	Brown and gray slightly silty Fine SAND (SP-SM)	0		Surface Elevation: +0.2+/-'
-1		1		
-2	Dark brown slightly silty Fine SAND (SP-SM)	2		
-3	Dark brown highly organic, silty Fine SAND (Pt)	3		
-4		4		
	Dark brown slightly silty Fine SAND (SP-SM)	5		
-5	Cream colored calcareous CLAY with limestone fragments (CL)			
-6		6		
	Brownish-gray and light brown slightly silty Fine SAND (SP-SM)			
	Brownish-gray sandy CLAY (CH)			
	Brownish-gray sandy CLAY with seams of cream colored clayey LIMESTONE (CL)	7		

DRIGGERS ENGINEERING SERVICES INCORPORATED

HAND AUGER BORING LOG

PROJECT: U.S. Alternate 19 & Meres Boulevard, Tarpon Springs, Florida, Project No.: DES 106582	**CLIENT:** Sycamore Engineering, Inc.
	WATER TABLE: +1.0' / **DATE:** 7/1/10
TECHNICIAN: S.F./M.J.	**DATE:** 7/1/10 / **COMPLETION DEPTH:** 7.0'
LOCATION: See Plate I	**TEST NUMBER:** HA-2

ELEV. (FT)	DESCRIPTION	DEPTH (FT)	SYMBOL	REMARKS
1	Dark brown organic, silty Fine SAND (SM/Pt)	0		Surface Elevation: +1.1+/-'
0		1		
	Dark gray organic, silty Fine SAND (SM/Pt)	2		
-1	Dark brown Fine SAND (SP)			
-2		3		
-3		4		
	Brown Fine SAND (SP)			
-4		5		
	Light brown Fine SAND (SP)			
-5		6		
-6		7		

SUMMARY OF LABORATORY TEST RESULTS

SUMMARY OF LABORATORY TEST RESULTS

BORING NO.	DEPTH (ft)	DESCRIPTION	W %	Y_d (pcf)	G_s	ATTERBERG LIMITS			P.P. (tsf)	U.C.	CON.	G.S.	ORG. (%)	pH	Cl. (ppm)	SO_4 (ppm)	RES. (Ohm-cm)
						LL	PL	SL									
HA-1	2.0-3.0	Dark brown slightly silty Fine SAND										*					
HA-1	3.0-4.3	Dark brown highly organic, silty Fine SAND											23.1				
HA-2	0.0-1.5	Dark brown organic, silty Fine SAND											5.8				
HA-2	1.5-2.0	Dark gray organic, silty Fine SAND											5.7				

W % = Water Content
Y_d (pcf) = Dry Density
G_S = Specific Gravity
LL = Liquid Limit
PL = Plastic Limit
SL = Shrinkage Limit
P.P. (tsf) = Pocket Penetrometer
U.C. = Unconfined Compression

Con. = Consolidation Test
G.S. (+1) = Grainsize Analysis (Hydrometer)
ORG. (%) = Organic Content
Cl. (ppm) = Total Chloride
SO_4 (ppm) = Total Sulfate
RES. (ohm-cm) = Lab Resistivity
* = See Test Curves
** = Percent Passing No. 200 Sieve

CLIENT: Sycamore Engineering, Inc.

PROJECT: U.S. Alternate 19 & Meres Boulevard, Tarpon Springs, Florida

FILE: DES 106582

GRAINSIZE ANALYSIS

DRIGGERS ENGINEERING SERVICES, INC.

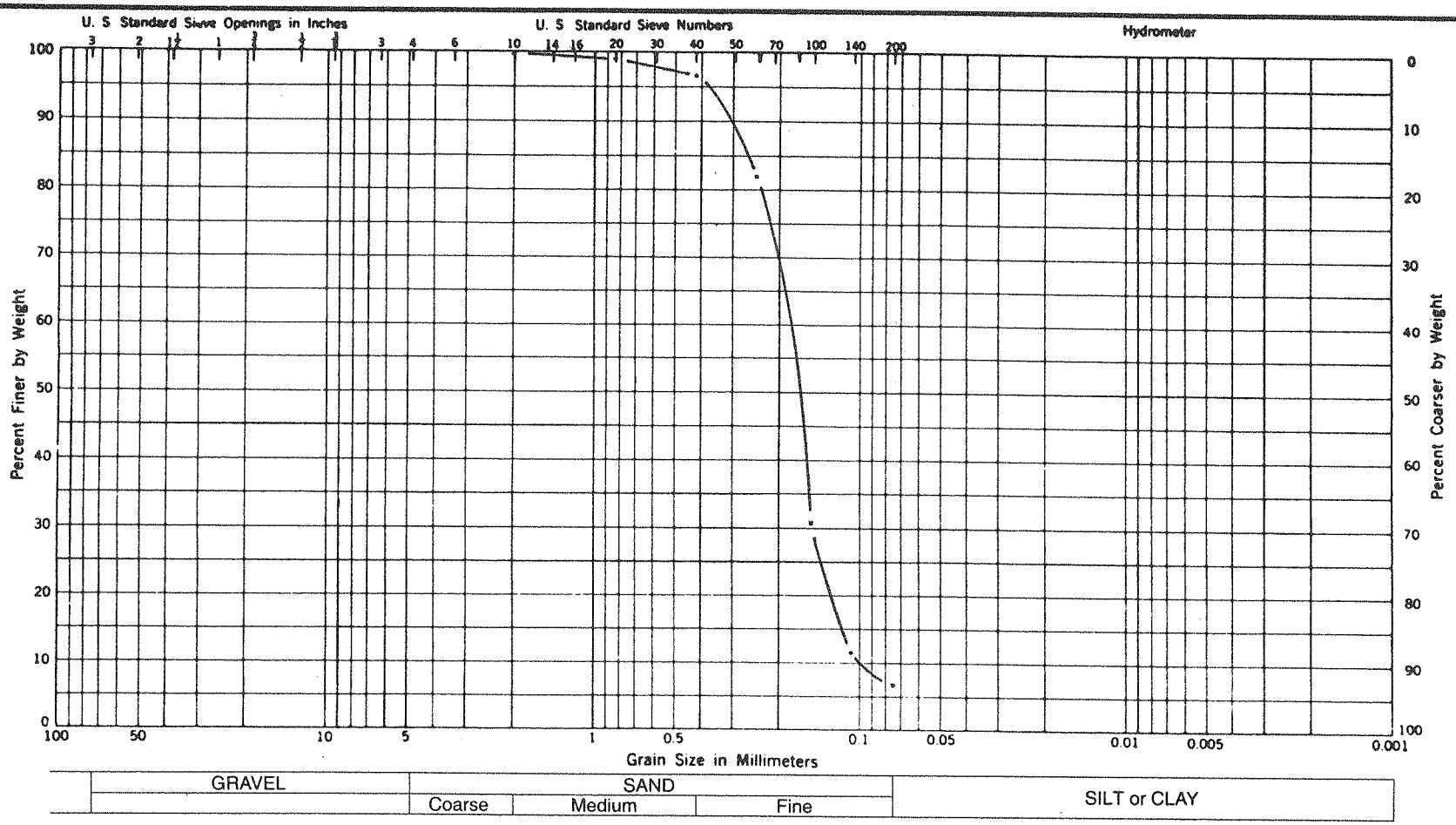

Number	Depth	Natural Moisture	L. L.	P. L.	P. I.	Classification
HA-1	2.0' - 3.0'					Dark brown slightly silty Fine SAND

CLIENT: Sycamore Engineering, Inc.

PROJECT: U.S. Alternate 19
& Meres Boulevard,
Tarpon Springs, Florida

FILE: DES 106582

THE SHOPPES AT MERES
NWC MERES BLVD & US ALT 19 N.
CITY OF TARPON SPRINGS, PINELLAS COUNTY, FLORIDA

DRAINAGE REPORT

For:
SWFWMD & City of Tarpon Springs

Prepared by:

8370 W. Hillsborough Ave, Suite 205
Tampa, Florida 33615
Certificate of Authorization No. 9485

SEI Project #J0308

October 20, 2019
Rev February 11, 2020
Rev- April 24, 2024

J.D. ALSABBAGH LICENSE NO. 58995 STATE OF FLORIDA PROFESSIONAL ENGINEER

J.D Alsabbagh Digitally signed by J.D. Alsabbagh DN: cn=J.D. Alsabbagh, o=Sycamore Engineering, Inc., ou, email=jalsabbagh@sycamoreeng.com, c=US Date: 2024.06.05 15:38:38 -04'00'

J.D. Alsabbagh, P.E.
PE # 58995

You created this PDF from an application that is not licensed to print to novaPDF printer (http://www.novapdf.com)

SECTION 1

SITE INFORMATION

TABLE OF CONTENTS

SECTION 1 SITE INFORMATION

1.1 Project Location
1.2 Existing Land Use and Drainage Conditions
1.3 Flood Zones
1.4 Soil Types
1.5 Proposed Land Use and Drainage Conditions
1.6 Operations and Maintenance of Stormwater System

SECTION 2 DRAINAGE ANALYSIS

2.1 Pre & Post Development Curve Number
2.2 Water Quality Calculations
2.3 Soil Permeability Rates and Hydraulic Conductivity Adjustment Calculations
2.4 Bleed Down Calculations – Pond Model Input Data & Results
2.5 Pre & Post Development Routing Calculations – ICPR Input Data & Results
2.6 Pre Development Basin Map, Post Development Basin Map

SECTION 3 ATTACHMENTS

Attachment A - Location Map
Attachment B - FEMA Map
Attachment C - SCS Soils Map
Attachment D – Topography (USGS Quadrangle Map)
Attachment E – Pinellas County Aerial Map

1.1 PROJECT LOCATION

The project site is located on the northwest corner of Meres Boulevard and US Alt 19 in the City of Tarpon Springs, Pinellas County, Florida. The site is located within Section 13, Township 27 South, and Range 15. See **Attachment A** for Location Map. The total area of the project is 1.82 acres.

1.2 EXISTING LAND USE AND DRAINAGE CONDITIONS

The existing site consists of an undeveloped lot. The site topography consists of shallow grades starting from the north, east, and south property lines and going down to the existing onsite wetland. The onsite wetland is the terminus of a dredged canal waterway that outfalls into Whitcomb Bayou.

The site consists of 1.20 Acres of wetland and 0.62 Acres of Upland. The Delineations of this wetland were approved by Southwest Florida Water Management District on February 18, 2010 under Petition No. 42035342.000. The wetland impact had been approved twice in two ERPs # 752835 / 44035342.003 & 755637 / 43035342.004.

1.3 FLOOD ZONES

The project area lies within Zone AE with a base flood elevation of 10', as indicated on the Federal Emergency Management Agency (FEMA) Flood Insurance Rate Maps, Panels Number 12103C0019H, dated August 24, 2021. See **Attachment B** for FEMA Map. Flood Plain compensation will not be necessary as the site runoff outfalls into a tidally influenced body of water.

1.4 SOIL TYPES

The project site consists of Matlacha/St. Augustine/Urban Land complex, Unit 16 in the Soils Survey of Pinellas County, Florida published by the United States Department of Agriculture - Soil Conservation Service (USDA - SCS), September 1972 edition.

Matlacha/St. Augustine/Urban Land comples is a poorly drained soil with shallow slopes. Listed separately Matlacha and St. Augustine are in the "C" hydraulic group. Urban Land is in the "D" Hydraulic group. Type "D" will be used in drainage calculations to ensure a conservative design.

See **Attachment C** for SCS Soil Map.

1.5 PROPOSED LAND USE AND DRAINAGE CONDITIONS

The proposed project consists of office building with associated parking spaces and new storm drainage system. The drainage system will convey onsite runoff into a dry retention pond for treatment. The site discharges into Spring Bayou which has been verified for

impairment of Iron and on the study list for nutrients. No net improvement will be required. As the project's WBID is part of Pinellas county Aquatic Preserve, which is an outstanding Florida Water (OFW) and so project will provide additional 50% treatment (total 0.75"). The overflow will outfall into an existing tidally influenced canal.

The site is currently near sea level with the majority of the site being wetland and/or surface water. The site will therefore require approximately 3' to 5' of fill. Fill material will be sand in the Type A hydrologic group. The average permeability rate of clean sand according to the Soil Survey of Pinellas County is approximately 20 to 50 in/hr, which equates to 40 to 100 ft/day. Please see **Section 2.3** for more details. In order to achieve a conservative design, permeability was assumed to be 15 feet per day (with a safety factor included) and hydraulic conductivity due to retaining wall is 8.5 feet per day. Furthermore, we list minimum specifications on the Construction Plans for soil types and compaction requirements in the vicinity of the retention pond. Section 2 shows the bleed down calculations utilizing Ponds software. The seasonal high water mark in the wetland is shown in the survey to be 1.65'. As part of the drainage analysis the soil porosity was estimated at 30% and the base of aquifer was assumed to be at the existing ground elevation of 0'. Section 2 shows the drainage analysis details.

1.6 OPERATION AND MAINTENANCE OF STORMWATER SYSTEM

The stormwater management system within the project outparcel site will be owned and operated by Juniper Development, LLC. Maintenance of the stormwater management system will follow the following guidelines:

The primary goal of the maintenance for the surface water management system is to insure that ponds, pond outfall structures, and all roadway and other conveyance systems are free from debris, sediment or vegetation. This is required to maintain a properly functioning system, free from flooding or failure of providing water quality treatment. Typical maintenance operations required for roadway drainage systems include but are not limited to the following listed items:

1) Pond Weir and Skimmer: The pond discharge control structures must be periodically inspected for the following:
    1. The perimeter area outside of the skimmer must be clear of any debris or overgrown vegetation that may inhibit or clock the flow of runoff entering the weir.
    2. The weir and skimmer must be cleared of debris and siltation. The downstream end of the outfall channel must be clear from overgrown vegetation and debris that could hinder flow.

2) Inlets and Pipes: Periodic inspections of the roadway and parking lot conveyance system should be conducted to prevent restrictions and/or blockages in pipes and inlets. Due to the high transportability of soils and sediments in this area, frequent removal of silt from inlets and pipes is usually required. Large facilities are particularly susceptible to siltation due to a variety of hauling activities that may occur on these facilities. The mowing of grassed areas by

maintenance crews also creates debris (glass clippings) that must be periodically removed in order to prevent clogging in the system. Grass clippings are primarily prone to clogging the top of grated ditch bottom inlets.

Maintenance crews should also be able to recognize erosion problems that might inadvertently occur within the drainage system. Additional sodding and/or riprap material may be required after construction of the system is completed or after a large rainfall event.

3) Cross Drains: Cross drains are frequently susceptible to siltation and scouring or erosion. These structures should be periodically inspected for siltation, erosion and blockages. Overgrown vegetation should be removed from the upstream and downstream channel areas to prevent flow restriction. The removal of silt and other debris from the culverts is required to maintain the hydraulic capacity of the crossing. Failure to do this could result in upstream flooding resulting in flood damage to the adjacent properties.

SECTION 2

DRAINAGE ANALYSIS

Pre & Post Development Curve Number

SYCAMORE ENGINEERING, INC.
8370 W. Hillsborough Avenue, Suite 205
Tampa, Florida 33615
(813) 889-0700

COMP. BY: GL
CHK'D BY: JDA
DATE: 04/16/24
SHT No.
JOB No. J0308

PROJECT: **THE SHOPPES AT MERES**
PRE-DEVELOPMENT CONDITION
BASIN A

RUNOFF CURVE NUMBER (CN)
PRE-DEVELOPMENT

HYDROLOGIC SOIL GROUP	LAND USE DESCRIPTION - INCLUDE PRACTICE AND CONDITION	CN	% OR AREA (ACRES)	PRODUCT
D(*)	OPEN SPACE	84.00	0.61	51.41
--	EXISTING WETLAND (WATER)	100.00	0.99	99.00
				0.00
				0.00
				0.00
				0.00
				0.00
				0.00
		TOTALS(**)	1.60	150.41

CN (WEIGHTED) 93.86 USE CN = 93.9

TIME OF CONCENTRATION (SEE TIME OF CONCENTRATION SHEET)= 16

STAGE STORAGE AND DISCHARGE

DESCRIPTION	ELEVATION	AREA (SF)	AREA (AC)	STAGE STORAGE (AC/FT)	VOLUME (AC/FT)
SHW					
BOTTOM					0
				0.00	
TOB					0.00
				0.00	
					0.00
				0.00	
					0.00
				0.00	
					0.00

NOTES:
(*) The site is unit 16 per Pinellas County Soil Survey, which is a Matlacha/St. Augustine/ Urban Land complex. Matlacha and St. Augustine are Type C soils, while the Urban Land is Type D. Type D is utilized to ensure a conservative design.
(**) Drainage analysis excludes preserved wetland area.

SYCAMORE ENGINEERING, INC.
8370 W. Hillsborough Avenue, Suite 205
Tampa, Florida 33615
(813) 889-0700

COMP. BY:	GL
CHK'D BY:	JDA
DATE:	04/16/24
SHT No.	
JOB No.	J0308

THE SHOPPES AT MERES

PRE-DEVELOPMENT CONDITION

BASIN A

Sheet flow Segment ID

Surface description			Concrete & Grass
Manning's roughness coeff.	n		0.15
Flow length, <= 300 ft	L	ft	100
Two yr 24-hr rainfall,	P_2	in	4
Land slope,	s	ft/ft	0.00570
Time of Concentration	Tc	min	14.48
Tc=0.007*(nL)^0.8/(p2^0.5*s^0.4)			

Shallow concentrated flow

Surface description(paved or unpaved)			unpaved
Flow length	L	ft	100
Watercourse slope	s	ft/ft	0.00500
Average velocity (Figure 3-1)	V	ft/s	1.2
Tt=L/60/V	Tt	min	1.39

Channel flow

Cross sectional flow area,	a	sf	
Wetted perimeter,	Pw	ft	
Hydraulic radius,	r	ft	
Channel slope	s	ft/ft	
Manning's roughness coeff.	n		
Average velocity, V=1.49*r^2*s^0.5/n	V	ft/s	
Flow length	L	ft	
Tt=L/60/V	Tt	min	

Watershed or subarea Tc or Tt		min	**16**

NOTES:

SYCAMORE ENGINEERING, INC.
8370 W. Hillsborough Avenue, Suite 205
Tampa, Florida 33615
(813) 889-0700

COMP. BY:	HS
CHK'D BY:	JDA
DATE:	04/16/24
SHT No.	
JOB No.	J0308

PROJECT: **THE SHOPPES AT MERES**

POST-DEVELOPMENT CONDITION

BASIN A

RUNOFF CURVE NUMBER (CN)
POST-DEVELOPMENT

HYDROLOGIC SOIL GROUP	LAND USE DESCRIPTION - INCLUDE PRACTICE AND CONDITION	CN	% OR AREA (ACRES)	PRODUCT
D	OPEN SPACE	84.00	0.33	27.39
D	IMPERVIOUS AREA	98.00	1.19	116.75
---	DRY RETENTION AREA	100.00	0.085	8.50
				0.00
				0.00
				0.00
				0.00
				0.00
		TOTALS(*)	1.60	152.64

CN (WEIGHTED) 95.26 USE CN = 95.3

TIME OF CONCENTRATION (INCLUDES MINIMUM 15 MIN)= 2

75 LF OF PAVEMENT @ 1.0 FPS 238 LF OF PIPE @ 2.5 FPS

POND LENGTH (FT): 121 POND WIDTH (FT): 29

STAGE STORAGE AND DISCHARGE

DESCRIPTION	ELEVATION	STAGE STORAGE AREA (SF)	AREA (AC)	(AC-FT)	VOLUME (AC-FT)
TOP	6.80	3,700	0.085	0.055	0.240
	5.50	3,700	0.085	0.021	0.185
	5.00	3,700	0.085	0.021	0.164
	4.50	3,700	0.085	0.042	0.1423
BOTTOM	4.00	3,700	0.085	0.100	0.0998
SHWL (*)	1.65	0	0.0000	0.000	0.000

NOTES:
(*) Drainage analysis excludes preserved wetland area.

Water Quality Calculation

SYCAMORE ENGINEERING, INC.
8370 W. Hillsborough Ave, Suite 205
Tampa, Florida 33615
(813) 889-0700

COMP. BY:	JT
CHK'D BY:	JDA
DATE:	04/16/24
SHT No.	
JOB No.	J0308

PROJECT: **THE SHOPPES AT MERES**

POST DEVELOPMENT CONDITION

BASIN A

WATER QUALITY CALCULATIONS
POST DEVELOPMENT

BASIN AREA (AC | SF):	1.60	69069
TREATMENT RUNOFF (IN.):	0.75	
RUNOFF VOLUME (ACFT | FT^3):	0.10	4317

POND A - DRY RETENTION

	STAGE (FT)	AREA (SF)	AREA (AC)	VOLUME (AC-FT)
TOB	6.80	3700	0.085	0.238
WATER QUALITY	5.20	3700	0.085	0.102
Bottom	4.00	3700	0.085	0.000
				0.00

REQUIRED WATER QUALITY ELEVATION: 5.20

Soil Permeability and Hydraulic Conductivity Adjustment Calculations

SYCAMORE ENGINEERING, INC.
8370 W. Hillsborough Avenue, Suite
Tampa, Florida 33615
(813) 889-0700

COMP. BY:	HS
CHK'D BY:	JDA
DATE:	04/17/24
SHT No.	
JOB No.	J0806

THE SHOPPES AT MERES
POST DEVELOPMENT
Hydraulic Conductivity Adjustment Due to Retaining Wall

$$k_{avg} = (L_{nw}/L_{tot} * k_h) + (L_w/L_{tot} * h_2/h_1 * k_h)$$

where:

kavg = the saturated horizontal hydraulic conductivity to be used in POND
Ltot = the total length of the perimeter of the pond
Lnw = the portion of the perimeter not walled
Lw = the portion of the perimeter that has a retaining wall
h1 = the total height from the highest stage volume to the base of aquifer
h2 = the height from the base of the retaining wall to the base of aquifer
kh = the unmodified saturated horizontal hydraulic conductivity

kh =	15	ft/day
Ltot =	501.3	ft
Lw =	501.3	ft
Lnw =	0	ft
h1 =	5.2	ft
h2 =	2.75	ft
Kavg =	**7.93**	

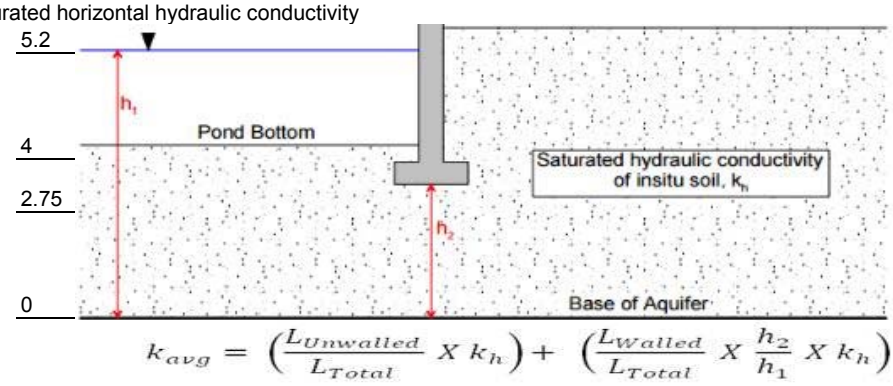

$$k_{avg} = \left(\frac{L_{Unwalled}}{L_{Total}} X\ k_h\right) + \left(\frac{L_{Walled}}{L_{Total}} X\ \frac{h_2}{h_1} X\ k_h\right)$$

L_{Total} is the total perimeter
L_{Walled} is the total perimeter
$L_{Unwalled}$ is the total perimeter

Bleed Down Calculations – Pond Model Input Data & Results

PONDS Version 3.3.0276
Retention Pond Recovery - Refined Method
Copyright 2012
Devo Seereeram, Ph.D., P.E.

Project Data

Project Name:	THE SHOPPES AT MERES- MERES & US ALT 19
Simulation Description:	150% (0.75")TREATMENT VOLUME
Project Number:	J0308
Engineer :	HS
Supervising Engineer:	JDA
Date:	02-11-2020 REV- 04-17-24

Aquifer Data

Base Of Aquifer Elevation, [B] (ft datum):	0.00
Water Table Elevation, [WT] (ft datum):	2.00
Horizontal Saturated Hydraulic Conductivity, [Kh] (ft/day):	7.93
Fillable Porosity, [n] (%):	30.00

Vertical infiltration was not considered.

Geometry Data

Equivalent Pond Length, [L] (ft):	194.0
Equivalent Pond Width, [W] (ft):	19.1

Ground water mound is expected to intersect the pond bottom

Stage vs Area Data

Stage (ft datum)	Area (ft²)
4.00	3700.0
4.50	3700.0
5.00	3700.0
5.50	3700.0
6.80	3700.0

Ditch Data

Ditch (or interceptor trench) parallel to length axis is inactive

Ditch (or interceptor trench) parallel to width axis is inactive

Discharge Structures

Discharge Structure #1 is inactive

Discharge Structure #2 is inactive

Discharge Structures (cont'd.)

Discharge Structure #3 is inactive

Scenario Input Data

Scenario 1 ::

Hydrograph Type: Slug Load
Modflow Routing: Routed with infiltration

Treatment Volume (ft^3) 4356

Initial ground water level (ft datum) 2.00 (default)

0.75" TREATMENT VOL.

Time After Storm Event (days)	Time After Storm Event (days)
0.100	2.000
0.250	2.500
0.500	3.000
1.000	3.500
1.500	4.000

Detailed Results :: *Scenario 1* ::

Elapsed Time	Instantaneous Inflow Rate	Outside Recharge	Stage Elevation	Infiltration Rate	Combined Instantaneous Discharge	Cumulative Inflow	Cumulative Infiltration	Combined Cumulative	
0.000	726.0000	0.00000	4.00000	0.24886	0	0.000	0.00000	0	N.A.
0.002	726.0000	0.00000	5.17689	0.24869	0	4356.000	1.49265	0	S
2.400	0.0000	0.00000	4.87777	0.09941	0	4356.000	1108.25400	0	S
6.000	0.0000	0.00000	4.68085	0.04705	0	4356.000	1836.84100	0	S
12.000	0.0000	0.00000	4.49532	0.02746	0	4356.000	2523.30200	0	S
24.000	0.0000	0.00000	4.27556	0.01604	0	4356.000	3336.44100	0	S
36.000	0.0000	0.00000	4.12080	0.01173	0	4356.000	3909.04200	0	S
48.000	0.0000	0.00000	4.00168	0.00517	0	4356.000	4349.79600	0	S
60.000	0.0000	0.00000	3.78588	0.00007	0	4356.000	4356.00000	0	S
72.000	0.0000	0.00000	3.63093	0.00000	0	4356.000	4356.00000	0	S
84.000	0.0000	0.00000	3.51164	0.00000	0	4356.000	4356.00000	0	S
96.000	0.0000	0.00000	3.41541	----	----	4356.000	4356.00000	0	N.A.

Summary of Results :: *Scenario 1* ::

	Time (hours)	Stage (ft datum)	Rate (ft^3/s)	Volume (ft^3)
Stage				
Minimum	96.000	3.42		
Maximum	0.002	5.18		
Inflow				
Rate - Maximum - Positive	0.002		726.0000	
Rate - Maximum - Negative	None		None	
Cumulative Volume - Maximum Positive	0.002			4356.0
Cumulative Volume - Maximum Negative	None			None
Cumulative Volume - End of Simulation	96.000			4356.0
Infiltration				
Rate - Maximum - Positive	0.002		0.2487	
Rate - Maximum - Negative	None		None	
Cumulative Volume - Maximum Positive	60.000			4356.0
Cumulative Volume - Maximum Negative	None			None
Cumulative Volume - End of Simulation	96.000			4356.0
Combined Discharge				
Rate - Maximum - Positive	None		None	
Rate - Maximum - Negative	None		None	
Cumulative Volume - Maximum Positive	None			None
Cumulative Volume - Maximum Negative	None			None
Cumulative Volume - End of Simulation	96.000			0.0
Discharge Structure 1 - inactive				
Rate - Maximum - Positive	disabled		disabled	
Rate - Maximum - Negative	disabled		disabled	
Cumulative Volume - Maximum Positive	disabled			disabled
Cumulative Volume - Maximum Negative	disabled			disabled
Cumulative Volume - End of Simulation	disabled			disabled
Discharge Structure 2 - inactive				
Rate - Maximum - Positive	disabled		disabled	
Rate - Maximum - Negative	disabled		disabled	
Cumulative Volume - Maximum Positive	disabled			disabled
Cumulative Volume - Maximum Negative	disabled			disabled
Cumulative Volume - End of Simulation	disabled			disabled
Discharge Structure 3 - inactive				
Rate - Maximum - Positive	disabled		disabled	
Rate - Maximum - Negative	disabled		disabled	
Cumulative Volume - Maximum Positive	disabled			disabled
Cumulative Volume - Maximum Negative	disabled			disabled
Cumulative Volume - End of Simulation	disabled			disabled
Pollution Abatement:				
36 Hour Stage and Infiltration Volume	36.000	4.12		3909.0
72 Hour Stage and Infiltration Volume	72.000	3.63		4356.0

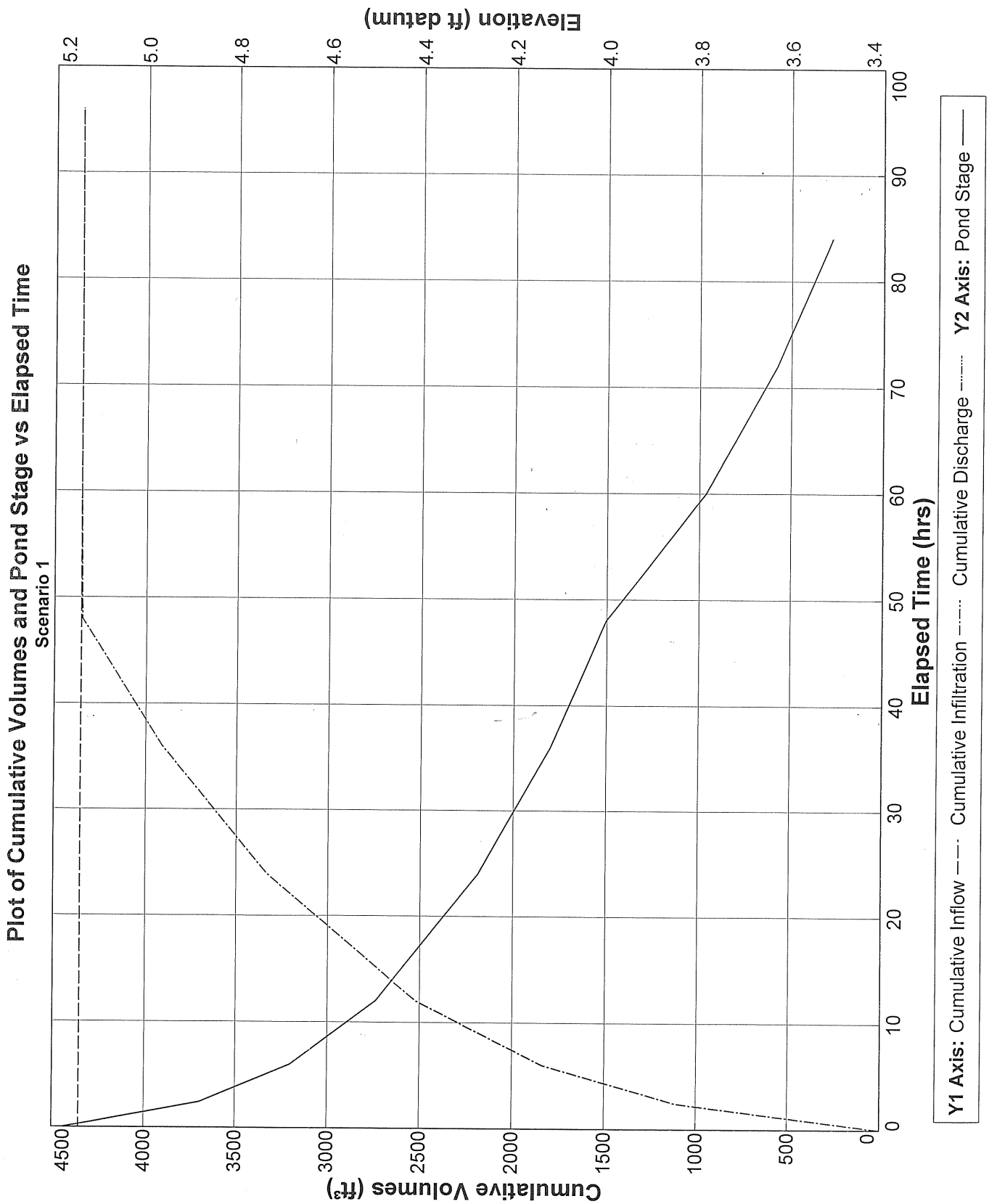
Plot of Cumulative Volumes and Pond Stage vs Elapsed Time
Scenario 1
Cumulative Volumes (ft³)
Elevation (ft datum)
Elapsed Time (hrs)
0
500
1000
1500
2000
2500
3000
3500
4000
4500
3.4
3.6
3.8
4.0
4.2
4.4
4.6
4.8
5.0
5.2
0
10
20
30
40
50
60
70
80
90
100
Y1 Axis: Cumulative Inflow —— Cumulative Infiltration -·-·- Cumulative Discharge ····· Y2 Axis: Pond Stage ——

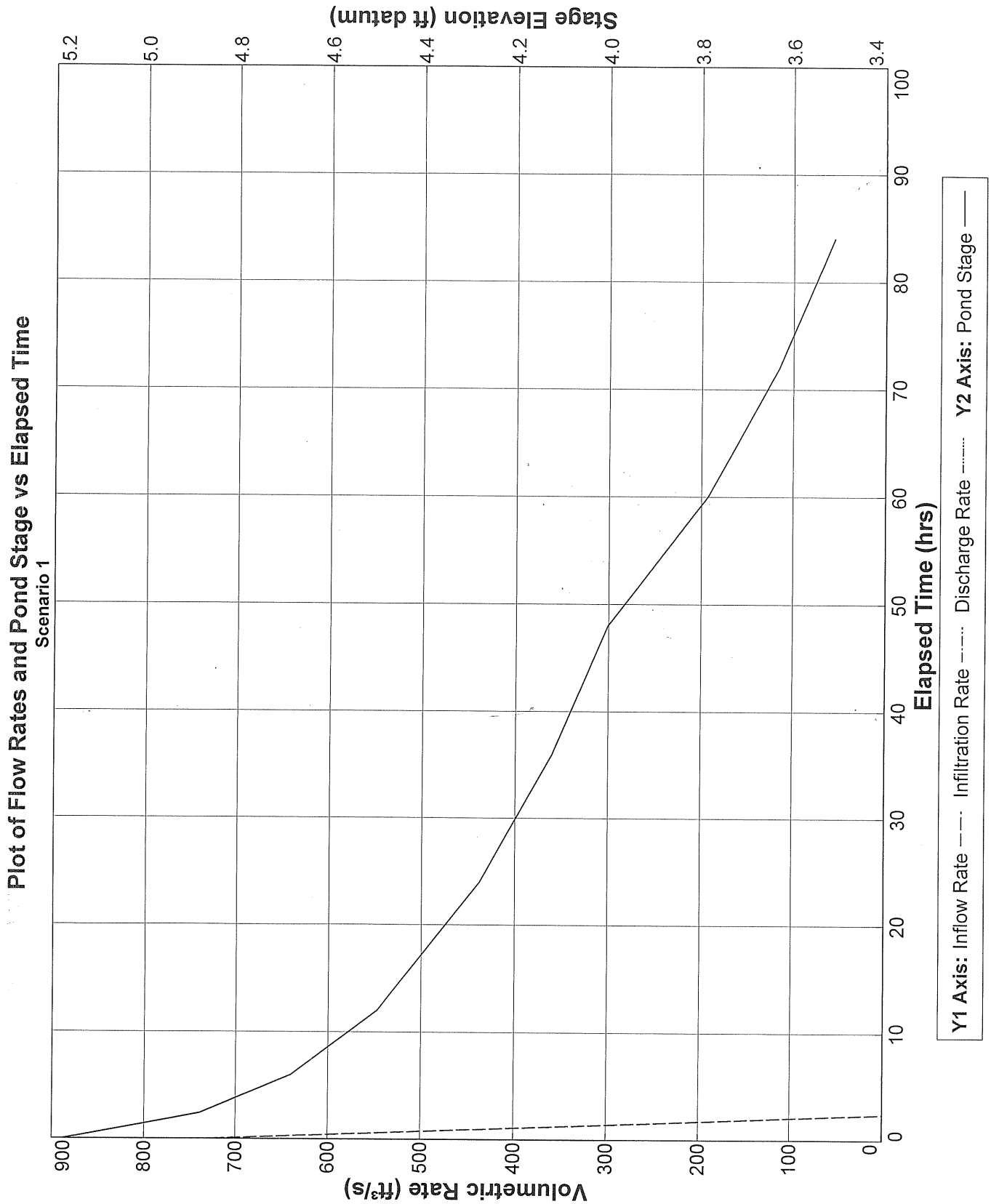
Plot of Flow Rates and Pond Stage vs Elapsed Time
Scenario 1
Stage Elevation (ft datum)
5.2
5.0
4.8
4.6
4.4
4.2
4.0
3.8
3.6
3.4
Volumetric Rate (ft³/s)
900
800
700
600
500
400
300
200
100
0
Elapsed Time (hrs)
0
10
20
30
40
50
60
70
80
90
100
Y1 Axis: Inflow Rate
Infiltration Rate
Discharge Rate
Y2 Axis: Pond Stage

Pre & Post Development
Routing Calculations – ICPR Input Data & Results

```
            Basin Name: A
            Group Name: BASE
            Simulation: 10YR24HR
             Node Name: A
            Basin Type: SCS Unit Hydrograph

       Unit Hydrograph: UH256
         Peaking Fator: 256.0
   Spec Time Inc (min): 2.13
   Comp Time Inc (min): 2.13
         Rainfall File: FLMOD
  Rainfall Amount (in): 7.500
  Storm Duration (hrs): 24.00
                Status: Onsite
    Time of Conc (min): 16.00
      Time Shift (hrs): 0.00
              Area (ac): 1.600
  Vol of Unit Hyd (in): 1.000
          Curve Number: 93.900
              DCIA (%): 0.000

        Time Max (hrs): 12.09
        Flow Max (cfs): 5.816
   Runoff Volume (in): 6.771
   Runoff Volume (ft3): 39324.725


--------------------------------------------------------------------------------

            Basin Name: A
            Group Name: BASE
            Simulation: 25YR24HR
             Node Name: A
            Basin Type: SCS Unit Hydrograph

       Unit Hydrograph: UH256
         Peaking Fator: 256.0
   Spec Time Inc (min): 2.13
   Comp Time Inc (min): 2.13
         Rainfall File: FLMOD
  Rainfall Amount (in): 9.000
  Storm Duration (hrs): 24.00
                Status: Onsite
    Time of Conc (min): 16.00
      Time Shift (hrs): 0.00
              Area (ac): 1.600
  Vol of Unit Hyd (in): 1.000
          Curve Number: 93.900
              DCIA (%): 0.000

        Time Max (hrs): 12.09
        Flow Max (cfs): 7.033
   Runoff Volume (in): 8.262
   Runoff Volume (ft3): 47985.650
```


You created this PDF from an application that is not licensed to print to novaPDF printer (http://www.novapdf.com)

Name	Group	Simulation	Max Time Flow hrs	Max Flow cfs	Max Delta Q cfs	Max Time US Stage hrs	Max US Stage ft	Max Time DS Stage hrs	Max DS Stage ft
PERC	BASE	10YR24HR	0.00	0.643	0.643	12.15	6.315	30.00	4.000
PERC	BASE	25YR24HR	0.00	0.643	0.643	12.14	6.479	30.00	4.000
WEIR	BASE	10YR24HR	12.15	5.654	-0.019	12.15	6.315	30.00	1.000
WEIR	BASE	25YR24HR	12.14	6.944	0.004	12.14	6.479	30.00	1.000

You created this PDF from an application that is not licensed to print to novaPDF printer (http://www.novapdf.com)

Name	Group	Simulation	Max Time Stage hrs	Max Stage ft	Warning Stage ft	Max Delta Stage ft	Max Surf Area ft2	Max Time Inflow hrs	Max Inflow cfs	Max Time Outflow hrs	Max Outflow cfs
GROUND	BASE	10YR24HR	30.00	4.00	4.00	0.0006	0	0.00	0.643	0.00	0.000
GROUND	BASE	25YR24HR	30.00	4.00	4.00	0.0006	0	0.00	0.643	0.00	0.000
OUTLET	BASE	10YR24HR	30.00	1.00	1.00	0.0003	0	12.15	5.654	0.00	0.000
OUTLET	BASE	25YR24HR	30.00	1.00	1.00	0.0003	0	12.14	6.944	0.00	0.000
POND A	BASE	10YR24HR	12.15	6.32	6.80	0.0025	3703	12.00	6.920	12.15	5.871
POND A	BASE	25YR24HR	12.14	6.48	6.80	0.0006	3703	12.00	8.348	12.14	7.167

You created this PDF from an application that is not licensed to print to novaPDF printer (http://www.novapdf.com)

==========
==== Basins ====
==========

Name: BASIN A Node: POND A Status: Onsite
Group: BASE Type: SCS Unit Hydrograph CN

Unit Hydrograph: UH256 Peaking Factor: 256.0
Rainfall File: FLMOD Storm Duration(hrs): 24.00
Rainfall Amount(in): 0.000 Time of Conc(min): 10.00
Area(ac): 1.600 Time Shift(hrs): 0.00
Curve Number: 95.30 Max Allowable Q(cfs): 999999.000
DCIA(%): 0.00

==========
==== Nodes ====
==========

Name: GROUND Base Flow(cfs): 0.000 Init Stage(ft): 2.000
Group: BASE Warn Stage(ft): 4.000
Type: Time/Stage

Time(hrs)	Stage(ft)
0.00	2.000
15.00	3.000
30.00	4.000

Name: OUTLET Base Flow(cfs): 0.000 Init Stage(ft): 0.000
Group: BASE Warn Stage(ft): 1.000
Type: Time/Stage

Time(hrs)	Stage(ft)
0.00	0.000
15.00	0.500
30.00	1.000

Name: POND A Base Flow(cfs): 0.000 Init Stage(ft): 4.120
Group: BASE Warn Stage(ft): 6.800
Type: Stage/Area

36 HR DRAWDOWN ELEVATION

Stage(ft)	Area(ac)
4.000	0.0850
4.500	0.0850
5.500	0.0850
6.800	0.0850

==========
==== Cross Sections ====
==========

==========
==== Operating Tables ====
==========

==========
==== Pipes ====
==========

==========
==== Channels ====
==========

==========
==== Drop Strcutures ====
==========

==========
==== Weirs ====
==========

Name: WEIR From Node: POND A
Group: BASE To Node: OUTLET
Flow: Both Count: 1
Type: Vertical: Mavis Geometry: Rectangular

You created this PDF from an application that is not licensed to print to novaPDF printer (http://www.novapdf.com)

```
                  Span(in): 18.00
                  Rise(in): 99999.00
                Invert(ft): 5.200
       Control Elevation(ft): 5.200
                                        TABLE
            Bottom Clip(in): 0.000
               Top Clip(in): 0.000
         Weir Discharge Coef: 3.200
      Orifice Discharge Coef: 0.600



================================================================================
==== Bridges ===================================================================
================================================================================


================================================================================
==== Breaches ==================================================================
================================================================================


================================================================================
==== Rating Curves =============================================================
================================================================================


================================================================================
==== Hydrology Simulations =====================================================
================================================================================

         Name: 10YR24HR
     Filename: \\MYCLOUDEX2ULTRA\Public\SEI_PROJECTS_\J0308 Pinellas Meres Blvd & Pinellas Ave\C_design_permitting\modeling\icpr\POST\10YR24HR.R32

      Override Defaults: Yes
    Storm Duration(hrs): 24.00
          Rainfall File: FLMOD
    Rainfall Amount(in): 7.50

Time(hrs)       Print Inc(min)
--------------- ---------------
100.000         15.00

--------------------------------------------------------------------------------------------------------
         Name: 25YR24HR
     Filename: \\MYCLOUDEX2ULTRA\Public\SEI_PROJECTS_\J0308 Pinellas Meres Blvd & Pinellas Ave\C_design_permitting\modeling\icpr\POST\25YR24HR.R32

      Override Defaults: Yes
    Storm Duration(hrs): 24.00
          Rainfall File: FLMOD
    Rainfall Amount(in): 9.00

Time(hrs)       Print Inc(min)
--------------- ---------------
100.000         15.00

================================================================================
==== Routing Simulations =======================================================
================================================================================

         Name: 10YR24HR            Hydrology Sim: 10YR24HR
     Filename: \\MYCLOUDEX2ULTRA\Public\SEI_PROJECTS_\J0308 Pinellas Meres Blvd & Pinellas Ave\C_design_permitting\modeling\icpr\POST\10YR24HR.I32

      Execute: Yes         Restart: No            Patch: No
  Alternative: No

        Max Delta Z(ft): 0.05                    Delta Z Factor: 0.05000
    Time Step Optimizer: 10.000
        Start Time(hrs): 0.000                    End Time(hrs): 30.00
     Min Calc Time(sec): 1.0000               Max Calc Time(sec): 30.0000
       Boundary Stages:                          Boundary Flows:



Time(hrs)       Print Inc(min)
--------------- ---------------
10.000          15.000
13.000          5.000
100.000         15.000

Group           Run
--------------- -----
BASE            Yes


--------------------------------------------------------------------------------------------------------
         Name: 25YR24HR            Hydrology Sim: 25YR24HR
     Filename: \\MYCLOUDEX2ULTRA\Public\SEI_PROJECTS_\J0308 Pinellas Meres Blvd & Pinellas Ave\C_design_permitting\modeling\icpr\POST\25YR24HR.I32

      Execute: Yes         Restart: No            Patch: No
  Alternative: No

        Max Delta Z(ft): 0.05                    Delta Z Factor: 0.00500
    Time Step Optimizer: 10.000
```


You created this PDF from an application that is not licensed to print to novaPDF printer (http://www.novapdf.com)

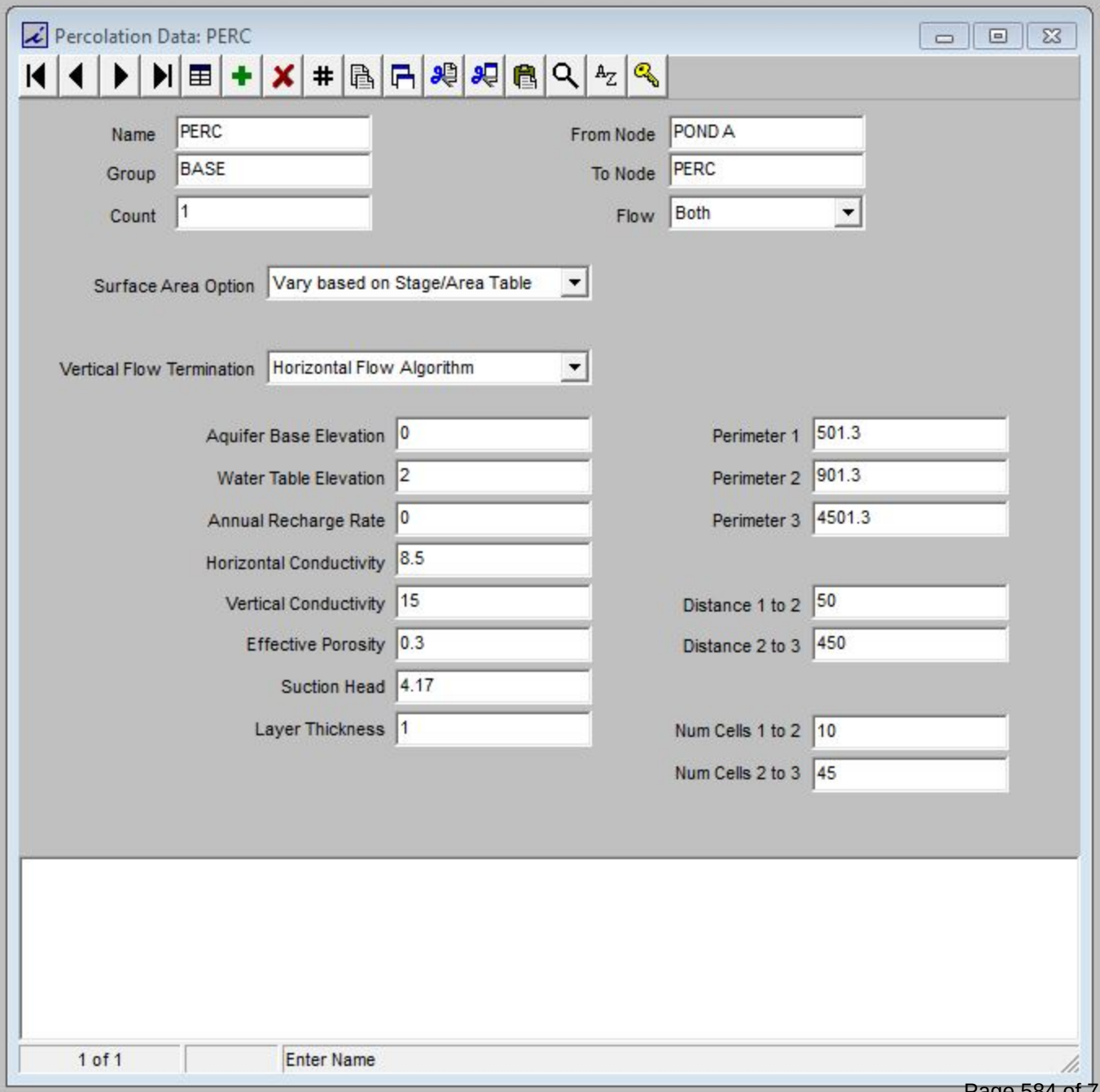
Percolation Data: PERC
Name
PERC
Group
BASE
Count
1
From Node
POND A
To Node
PERC
Flow
Both
Surface Area Option
Vary based on Stage/Area Table
Vertical Flow Termination
Horizontal Flow Algorithm
Aquifer Base Elevation
0
Water Table Elevation
2
Annual Recharge Rate
0
Horizontal Conductivity
8.5
Vertical Conductivity
15
Effective Porosity
0.3
Suction Head
4.17
Layer Thickness
1
Perimeter 1
501.3
Perimeter 2
901.3
Perimeter 3
4501.3
Distance 1 to 2
50
Distance 2 to 3
450
Num Cells 1 to 2
10
Num Cells 2 to 3
45
1 of 1
Enter Name

Start Time(hrs): 0.000 End Time(hrs): 30.00
Min Calc Time(sec): 1.0000 Max Calc Time(sec): 30.0000
Boundary Stages: Boundary Flows:

Time(hrs)	Print Inc(min)
10.000	15.000
13.000	5.000
100.000	15.000

Group	Run
BASE	Yes

You created this PDF from an application that is not licensed to print to novaPDF printer (http://www.novapdf.com)

Pre Development Basin Map, Post Development Basin Map

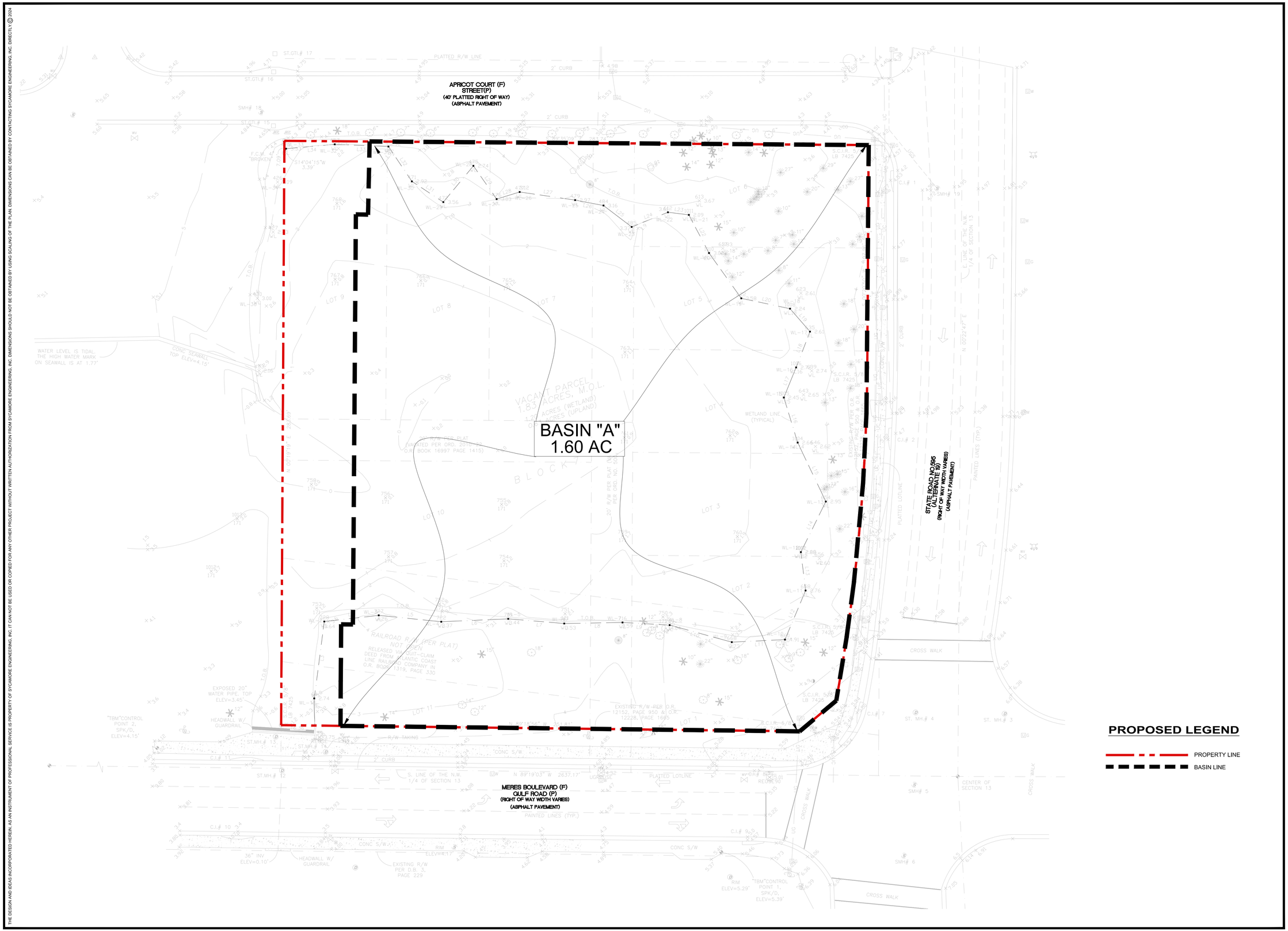

THE DESIGN AND IDEAS INCORPORATED HEREIN, AS AN INSTRUMENT OF PROFESSIONAL SERVICE IS PROPERTY OF SYCAMORE ENGINEERING, INC. IT CAN NOT BE USED OR COPIED FOR ANY OTHER PROJECT WITHOUT WRITTEN AUTHORIZATION FROM SYCAMORE ENGINEERING, INC. DIRECTLY. © 2024

0 20 40
Scale: 1" = 20'

CONTRACTOR SHALL CONTACT SUNSHINE STATE ONE-CALL OF FLORIDA, INC. FOR LOCATION OF ALL UTILITIES TWO COMPLETE BUSINESS DAYS PRIOR TO BEGINNING CONSTRUCTION.

811 Know what's below. Call before you dig.

No.	Date	Revision - Description
1		
2		
3		
4		
5		
6		

SYCAMORE ENGINEERING, INC.
8370 W. Hillsborough Ave., Suite 205
Tampa, FL 33615
Phone: 813.889.0700
Fax: 813.889.0788
email: greatteam@sycamoreeng.com
• Civil Engineering
• Surveying & Mapping
• Land Planning
• Construction Management
• Landscape Architecture
F.L. C.A. # 9485 & L.B. # 7961

Project Title: THE SHOPPERS AT MERES

Project Location: 1098 SOUTH PINELLAS AVENUE
TARPON SPRINGS, FL 33689

Sheet Title: PRE-DEVELOPMENT BASIN MAP

J.D. ALSABBAGH, P.E.
FL P.E. #58995

Job No.	J0308
Drawn by:	FHG
Approved by:	JDA
Date:	04-16-2024

Sheet No.
B-1

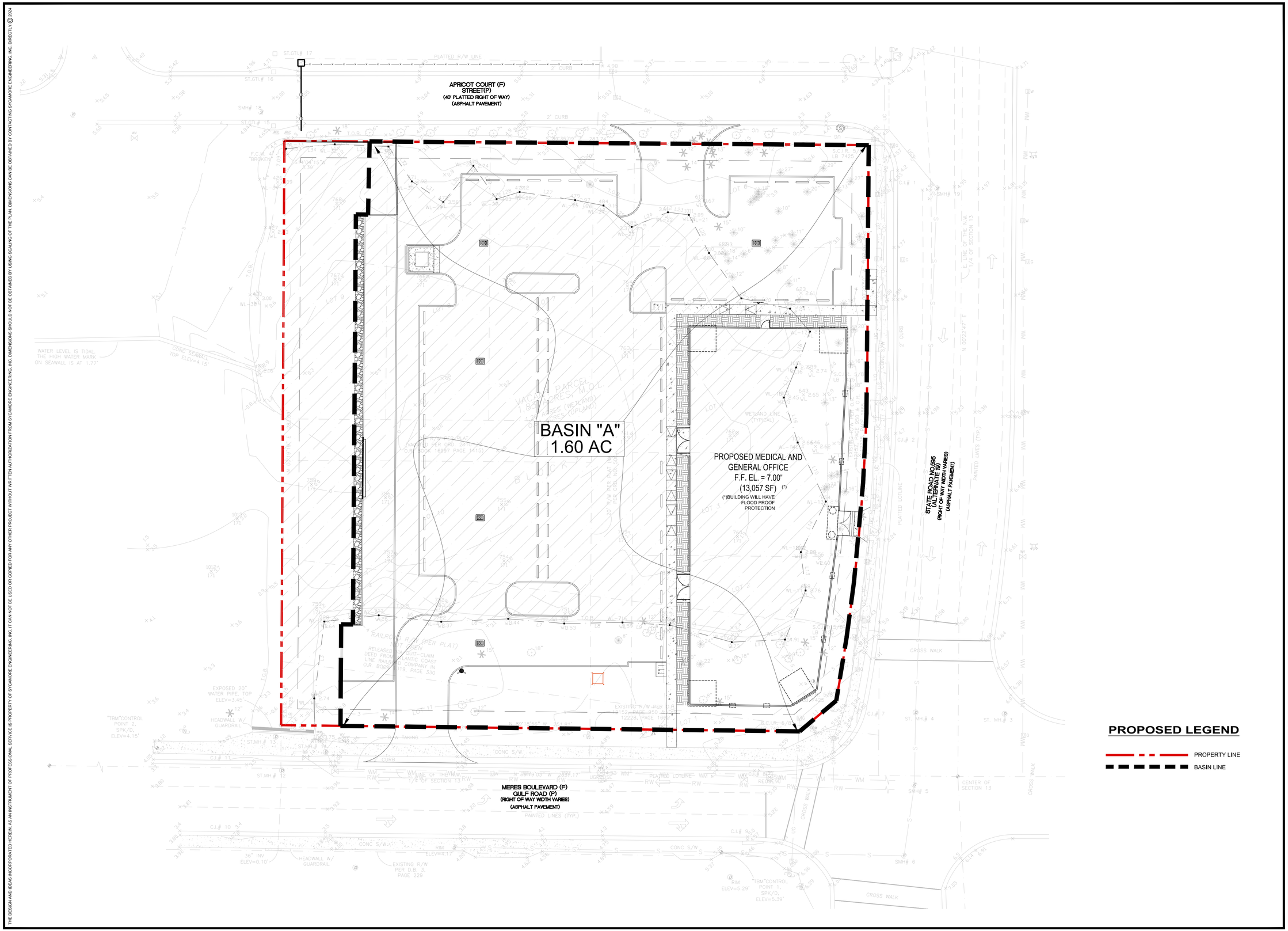

Scale: 1" = 20'

CONTRACTOR SHALL CONTACT SUNSHINE STATE ONE-CALL OF FLORIDA, INC. FOR LOCATION OF ALL UTILITIES TWO COMPLETE BUSINESS DAYS PRIOR TO BEGINNING CONSTRUCTION.

Know what's below. Call before you dig.

No.	Date	Revision - Description
1		
2		
3		
4		
5		
6		
7		

SYCAMORE ENGINEERING, INC.

8370 W. Hillsborough Ave., Suite 205
Tampa, FL 33615
Phone: 813.889.0700
Fax: 813.889.0788
email: greatteam@sycamoreeng.com

• Civil Engineering
• Surveying & Mapping
• Land Planning
• Construction Management
• Landscape Architecture

F.L. C.A. # 9485 & L.B. # 7961

Project Title: THE SHOPPERS AT MERES

Project Location: 1098 SOUTH PINELLAS AVENUE TARPON SPRINGS, FL 33689

Sheet Title: POST-DEVELOPMENT BASIN MAP

J.D. ALSABBAGH, P.E.
FL P.E. #58995

Job No.	J0308
Drawn by:	FHG
Approved by:	JDA
Date:	04-16-2024

Sheet No.

B-2

THE DESIGN AND IDEAS INCORPORATED HEREIN, AS AN INSTRUMENT OF PROFESSIONAL SERVICE IS PROPERTY OF SYCAMORE ENGINEERING, INC. IT CAN NOT BE USED OR COPIED FOR ANY OTHER PROJECT WITHOUT WRITTEN AUTHORIZATION FROM SYCAMORE ENGINEERING, INC. DIRECTLY. © 2024

SECTION 3

Attachments

SECTION 13, TOWNSHIP 27 SOUTH, RANGE 15 EAST
TARPON SPRINGS, FLORIDA

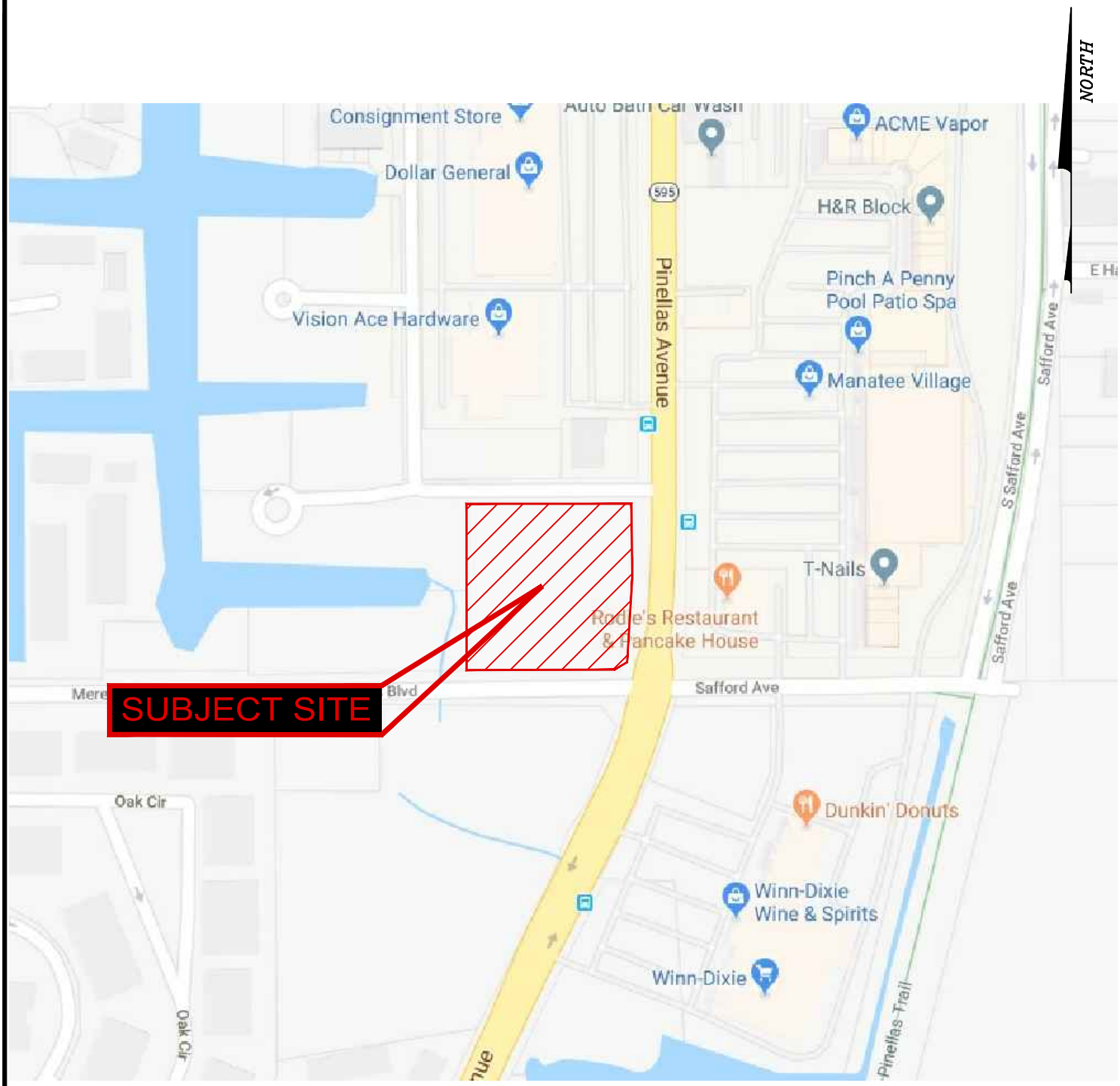

SYCAMORE
ENGINEERING, INC.
8370 W. Hillsborough Ave., Suite 205
Tampa, FL 33615
Phone: 813.889.0700
Fax: 813.889.0788
e:mail: greatteam@sycamoreeng.com

- Civil Engineering
- Surveying & Mapping
- Land Planning
- Construction Management
- Landscape Architecture

F.L. C.A. # 9485 &
L.B. # 7961

LOCATION MAP

THE SHOPPERS AT MERES
NWC PINELLAS AVE. & MERES BLVD.
TARPON SPRINGS, FLORIDA 33712

Scale: N.T.S.	Job No.: J0308
Date: 04-19-2024	Attachement: A

SECTION 13, TOWNSHIP 27 SOUTH, RANGE 15 EAST
TARPON SPRINGS, FLORIDA

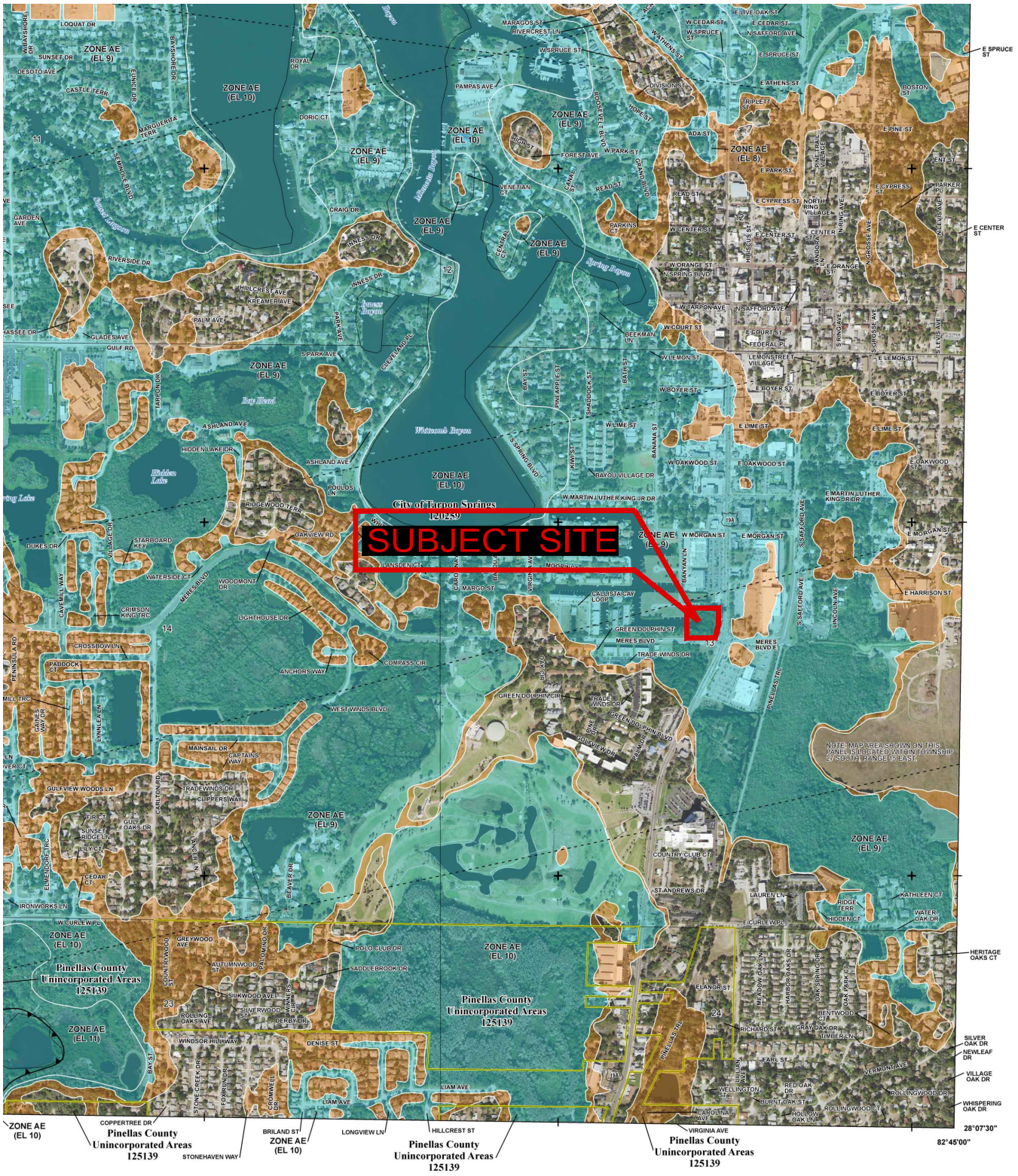

SYCAMORE ENGINEERING, INC.

8370 W. Hillsborough Ave., Suite 205
Tampa, FL 33615
Phone: 813.889.0700
Fax: 813.889.0788
e:mail: greatteam@sycamoreeng.com

- *Civil Engineering*
- *Surveying & Mapping*
- *Land Planning*
- *Construction Management*
- *Landscape Architecture*

F.L. C.A. # 9485 &
L.B. # 7961

FEMA FLOOD MAP

THE SHOPPERS AT MERES
NWC PINELLAS AVE. & MERES BLVD.
TARPON SPRINGS, FLORIDA 33712

Scale: See Scale	Job No.: J0308
Date: 04-19-2024	Attachement: B

NATIONAL FLOOD INSURANCE PROGRAM

FLOOD INSURANCE RATE MAP

PINELLAS COUNTY, FLORIDA
and Incorporated Areas

PANEL 19 OF 327

FEMA

Panel Contains:

COMMUNITY	NUMBER	PANEL	SUFFIX
PINELLAS COUNTY	125139	0019	H
TARPON SPRINGS, CITY OF	120259	0019	H

VERSION NUMBER
2.4.3.2

MAP NUMBER
12103C0019H

MAP REVISED
AUGUST 24, 2021

SYCAMORE ENGINEERING, INC.
8370 W. Hillsborough Ave., Suite 205
Tampa, FL 33615
Phone: 813.889.0700
Fax: 813.889.0788
e:mail: greatteam@sycamoreeng.com

- Civil Engineering
- Surveying & Mapping
- Land Planning
- Construction Management
- Landscape Architecture

F.L. C.A. # 9485 &
L.B. # 7961

FEMA PANEL

THE SHOPPERS AT MERES
NWC PINELLAS AVE. & MERES BLVD.
TARPON SPRINGS, FLORIDA 33712

Scale: N/A	Job No.: J0308
Date: 04-19-2024	Attachement: B

SECTION 13, TOWNSHIP 27 SOUTH, RANGE 15 EAST
TARPON SPRINGS, FLORIDA

NORTH



USDA Natural Resources Conservation Service

Web Soil Survey
National Cooperative Soil Survey

4/22/2024
Page 1 of 3

16: MATLACHA AND
ST. AUGUSTINE SOILS
AND URBAN LAND

99: WATER

SYCAMORE ENGINEERING, INC.
8370 W. Hillsborough Ave., Suite 205
Tampa, FL 33615
Phone: 813.889.0700
Fax: 813.889.0788
e:mail: greatteam@sycamoreeng.com

- *Civil Engineering*
- *Surveying & Mapping*
- *Land Planning*
- *Construction Management*
- *Landscape Architecture*

F.L. C.A. # 9485 &
L.B. # 7961

SOIL MAP

THE SHOPPERS AT MERES
NWC PINELLAS AVE. & MERES BLVD.
TARPON SPRINGS, FLORIDA 33712

Scale: See Scale	Job No.: J0308
Date: 04-19-2024	Attachement: C

Pinellas County, Florida (FL103)

Map Unit Symbol	Map Unit Name	Acres in AOI	Percent of AOI
16	Matlacha and St. Augustine soils and Urban land	2.0	69.2%
99	Water	0.9	30.8%
Totals for Area of Interest		**2.8**	**100.0%**

SYCAMORE ENGINEERING, INC.

- *Civil Engineering*
- *Land Planning*
- *Construction Management*
- *Landscape Architecture*

8370 W. Hillsborough Ave., Suite 205
Tampa, FL 33615
Phone: 813.889.0700
Fax: 813.889.0788
e:mail: greatteam@sycamoreeng.com
www.sycamoreeng.com

Certificate of Authorization No. 9485

Scale: N/A

Date: OCT,2019

Job No.: J0308

SOILS LEGEND

THE SHOPPES AT MERES
NWC OF MERES BLVD & PINELLAS AVE
PINELLAS COUNTY, CITY OF TARPON SPRINGS, FL

© 2019

NORTH

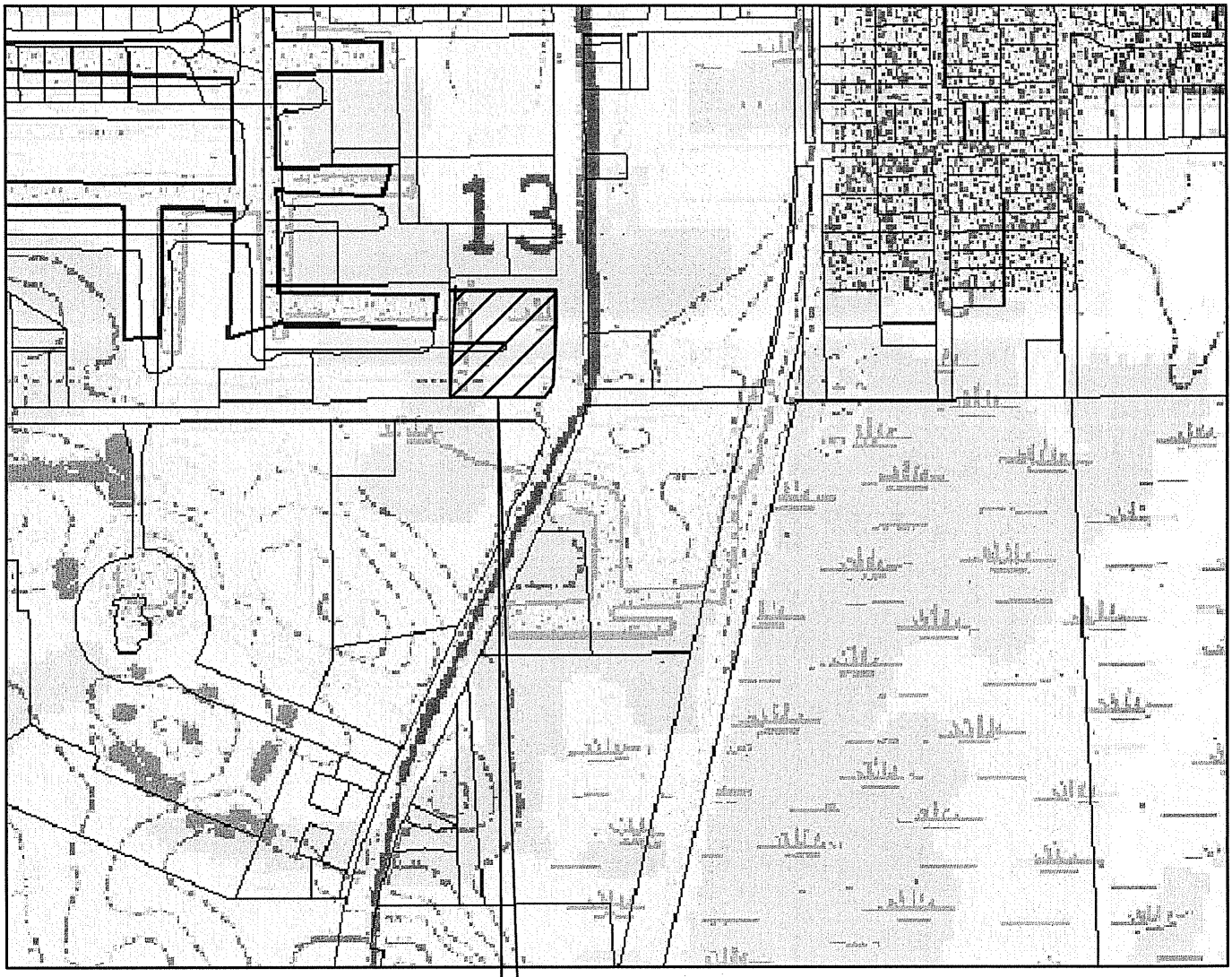

SYCAMORE ENGINEERING, INC.

- Civil Engineering
- Land Planning
- Construction Management
- Landscape Architecture

8370 W. Hillsborough Ave., Suite 205
Tampa, FL 33615
Phone: 813.889.0700
Fax: 813.889.0788
e:mail: greatteam@sycamoreeng.com
www.sycamoreeng.com

Certificate of Authorization
No. 9485

Scale: N/A

Date: FEB.,2010

Job No.: B0504

TOPOGRAPHIC MAP

THE SHOPPES AT MERES
NWC OF MERES BLVD & PINELLAS AVE
PINELLAS COUNTY, CITY OF TARPON SPRINGS, FL

© 2010

SECTION 13, TOWNSHIP 27 SOUTH, RANGE 15 EAST
TARPON SPRINGS, FLORIDA



500' 0 500'

SCALE: 1" = 500'

SYCAMORE ENGINEERING, INC.
8370 W. Hillsborough Ave., Suite 205
Tampa, FL 33615
Phone: 813.889.0700
Fax: 813.889.0788
e:mail: greatteam@sycamoreeng.com

- Civil Engineering
- Surveying & Mapping
- Land Planning
- Construction Management
- Landscape Architecture

F.L. C.A. # 9485 &
L.B. # 7961

AERIAL MAP

THE SHOPPERS AT MERES
NWC PINELLAS AVE. & MERES BLVD.
TARPON SPRINGS, FLORIDA 33712

Scale: See Scale	Job No.: J0308
Date: 04-19-2024	Attachement: D



LISTED SPECIES SURVEY
FOR THE
MERES BLVD. SITE,
TARPON SPRINGS, FLORIDA

March 11, 2022
Updated September 18, 2024

By

Donald Richardson, Ph.D.
Ecological Consultants, Inc.
5121 Ehrlich Road, Suite 103A
Tampa, Fl. 33624

INTRODUCTION

The Meres Blvd. project is approximately 1.2 acres of wetland and 0.63 acres of upland located on the northwest corner of the intersection of Meres Blvd. and Alt. 19 in Tarpon Springs, Florida (TRS: 27/15/13) (Figure 1). The project is bordered on the north by commercial development, on the east by Alt. Highway 19, on the south by Meres Blvd. and on the west by undeveloped lands and a tidal canal. This report represents an environmental assessment of the existing flora and fauna of the site with special reference to all listed species that may have some protection by state and federal agencies and Pinellas County.

SOILS

The soils associated with this small site appear to have been reworked as evidenced by piles of spoil. Only one soils type occurs on the site as follows (Figure 2):

1. Made Land (Ma) – Made lands consist of mixed sand, clay, hard rock, shells, and shell fragments that have been transported, reworked, and leveled by earth moving equipment (Figure 3). Made lands occur mainly in urban areas along the coast and keys.

VEGETATION

Upland Open Land

Due to past soil disturbance, the undeveloped lands within urban areas (FLUCCS #191) is characterized by ruderal or weedy species (Figure 4). The most common species include Australian pine (*Casuarina equisetifolia*), cabbage palm (*Sabal palmetto*), Brazilian pepper (*Schinus terebinthifolius*), saltbush (*Baccharis halimifolia*), St. Augustine grass (*Stenotaphrum secundatum*), beggars tick (*Bidens alba*), sawbrier

(*Smilax auriculata*), Bermuda grass (*Cynodon dactylon*), Spanish moss (*Tillandsia usneoides*), evening primrose (*Oenothera biennis*), ragweed (*Ambrosia* artemisiifolia), pepper weed (*Lepidium virginicum*), sweet clover (*Melilotus indicus*), trumpet creeper (*Campis radicans*) and others.

Mangrove Swamp Wetlands

The central wetlands are connected to Whitcomb Bayou via a series of man-made canals (Figure 3A & 5). The wetland is separated into mangrove swamp (FLUCCS #612) and low marsh/tidal flats (FLUCCS #642/FLUCCS #651). The central portion of the wetland is dominated by low saltmarsh and tidal flats that cover about 0.44 acres (Figure 6). The majority of this central zone is open tidal flats nearly devoid of vegetation. The low marsh species are congregated adjacent to the black mangrove zone at slightly lower elevations. The only low marsh species is smooth cordgrass (*Spartina alterniflora*) that occurs in only a few isolated patches.

The mangrove forest is dominated by black mangrove (*Avicennia germinans*) and white mangrove (*Laguncularia racemosa*) with a few scattered red mangrove (*Rhizophora mangle*) on the exposed edges. This estuarine forested system is divided into approximately 0.38 acres of relatively undisturbed black mangroves which occur adjacent to the low marsh tidal flats. The outer fringe occurs on more disturbed soils and Brazilian pepper has invaded about 0.38 acres of the black mangrove forest.

Both the low marsh and the mangrove forest are connected to the adjacent canal to the east which flows into Whitcomb Bayou. The canal has been sea walled and several docks constructed. Most of the native mangrove vegetation was removed during construction of the sea wall and only isolated stands of mangroves exist (Figure 7). It

appears that periodic dredging of the canal does occur in order to provide boat access to the gulf.

LISTED PLANT SPECIES

Only one listed plant species was observed on site as follows:

1. Leatherleaf fern (*Acrostichum danaeifolium*) – Commercially exploited, FDA.

This species is often associated with the fringes of tidal creeks or mangrove forests and has been protected by the state due to past harvesting. Most of the existing plants occur at the upper edges of the mangrove forest.

LISTED ANIMAL SPECIES

Only one listed animal species was observed on site as follows:

1. Osprey (*Pandion haliaetus*) – Species of Special Concern, FWC.

During the field survey of the site over several visits, ospreys often perch on some of the tall trees as look out perches or to eat prey items caught in the adjacent canal. No nest sites were observed on the property; however, a nest box has been occupied in the adjacent Banyans project (Figure 8). Wood storks (*Mycteria americana*) frequent the area but have not been observed at this site due to the lack of good foraging sites. A computer search of the state data base yielded no active nesting sites near Meres Blvd.

The small tooth sawfish (*Pristis pectinata*) is currently listed as endangered by ESA and critical habitat has been designated for the Charlotte Harbor Estuary and the Ten Thousand Islands to the south of Tampa Bay. This species prefers euryhaline red mangrove habitats with water depths less than 3 feet. The Meres site does not provide suitable habitat for this species and the adjacent canals that feed into Whitcomb Bayou have been sea walled and nearly all the red mangroves removed. Additionally, these

canals may be periodically dredged which negatively affects this species. It would be a rare occurrence for this species to be associated with the Whitcomb Bayou canals.

In summary, the site is divided into approximately 0.63 acres of disturbed uplands and 1.20 acres of mangrove swamp, low marsh and tidal flats. About 50% of the black mangrove forest has been invaded by Brazilian pepper due to past soil disturbance caused by filling. One listed plant species (i.e., leatherleaf fern) and one animal species (i.e., osprey) were observed on site. No nest sites were observed on site for any listed species. Several wading birds do utilize the tidal flats as forage sites but no birds were observed on several visits. Development of this site would require some mitigation to off set wetland impacts.

Figure 1. Location map for the Meres Blvd. project.

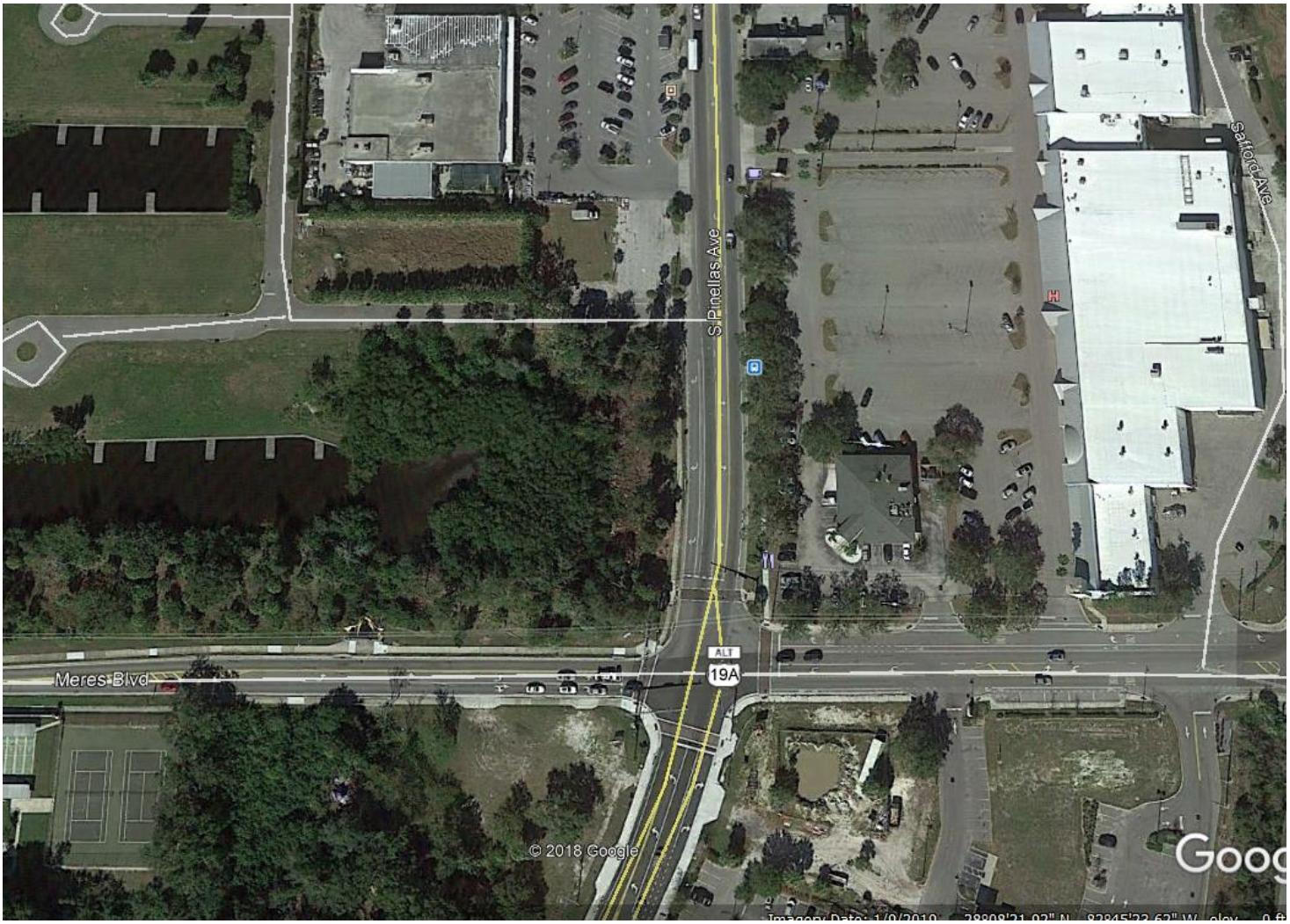

Figure 2. Soils map for the Meres Blvd. project.

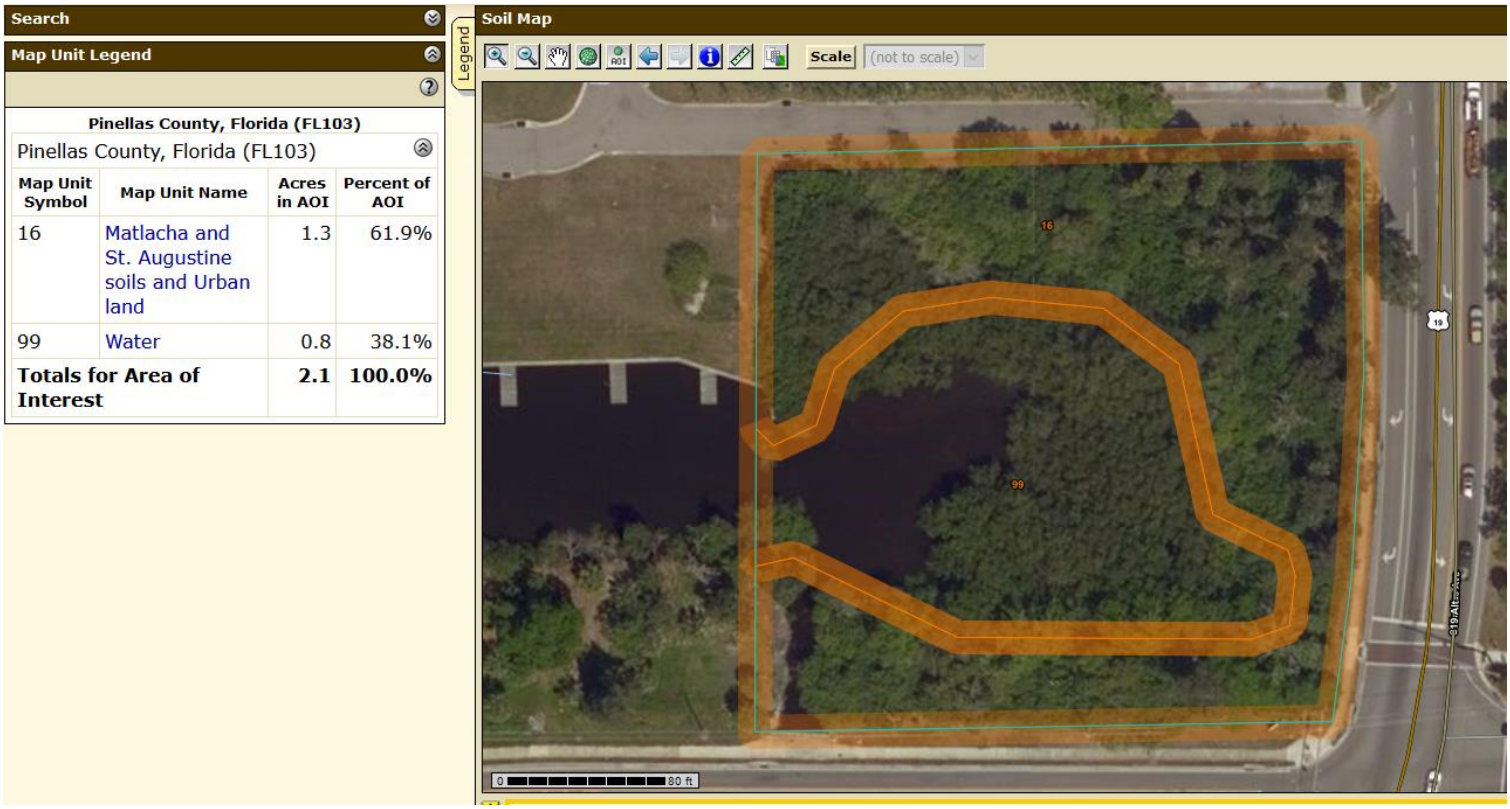

Figure 3A. Vegetation map showing wetland zonation.

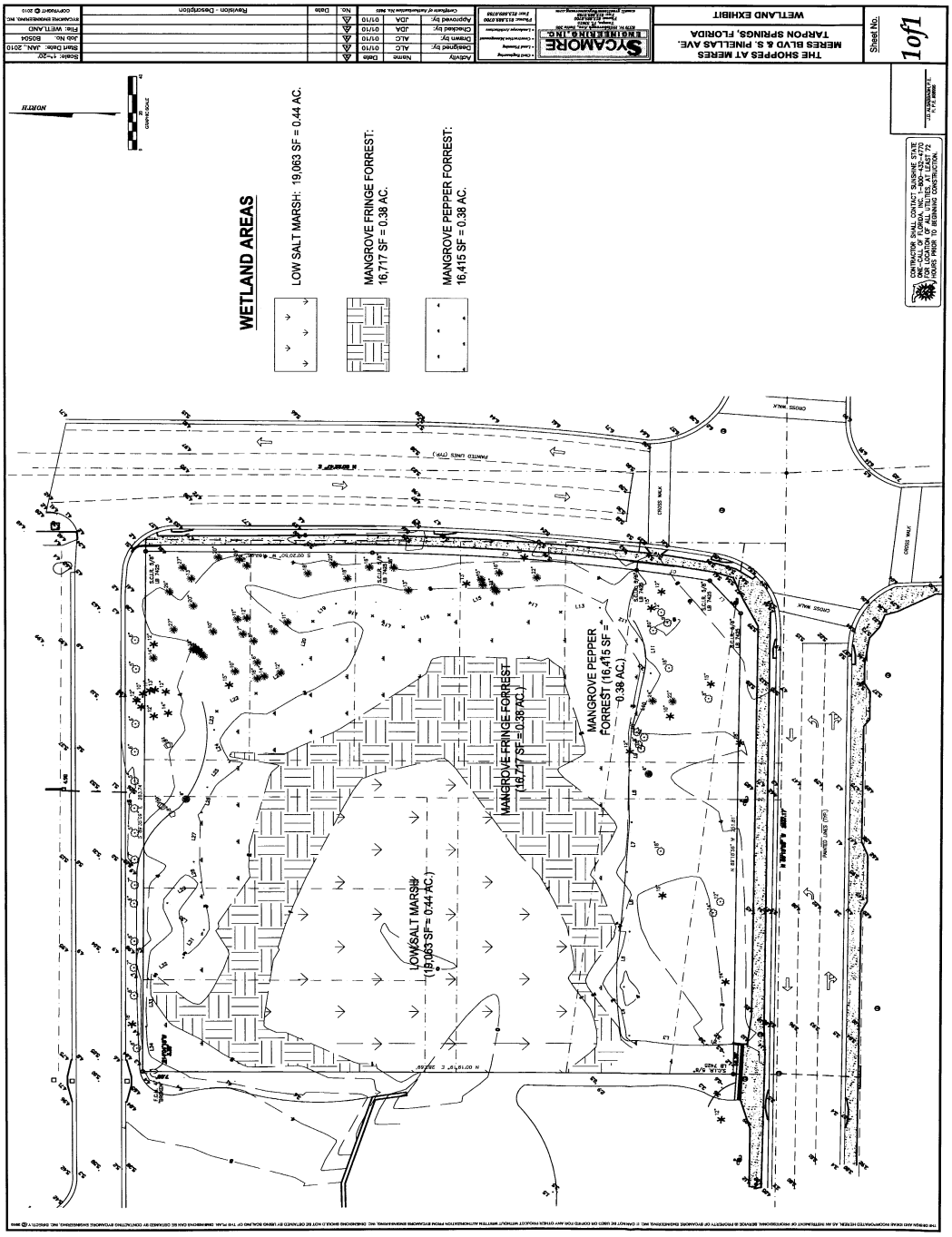

Figure 3B. Upper mangrove swamp zone showing fill materials.



Figure 4. Upland ruderal community showing Australian pine.



Figure 5. The Meres wetlands are connected to Whitcomb Bayou via a series of canals.



Figure 6. Black mangrove forest, low marsh and tidal flats.



Figure 7. Canals showing lack of native vegetation (upper) and Whitcomb Bayou (lower).





Figure 8. Osprey on platform in the Bayans project to north.



EXISTING TREE SUMMARY

The site is mostly an existing wetland with some trees along the perimeter that are comprised mainly of Australian Pine and Sabal Palm, with some Live Oaks and a few Red Cedars.

The trees overall are generally in poor or decline/dead condition with one in fair condition. The Live Oaks along the southern perimeter are in close proximity to overhead utility lines and have limited area for canopy development on the southern side.

General condition determinations based on the following:

Highly Visible Factors Considered

Condition Rating	General Condition	Overall vigor	Canopy density	Amount of deadwood	Structural Defects of trunk, scaffold branches	Pests	Extents of decay
0	Decline/Dead	Severe Decline	<20%	Large: Major scoffold branches	Evidence of failure	Infested	Major - conks and cavities
1	Poor	Declining	20-60%	Twig and branch dieback	Major	Infestation of significant pests	One to a few conks: small cavities
2	Fair	Low	60-80%	Small twigs	Some	Minor	Present at pruning wounds
3	Good	Good	80-100%	Little or none	Minor	Minor	Present at pruning wounds
4	Excellent	Excellent	100%	None	None	None or Insignificant	Absent

BASED ON "TREES AND DEVELOPMENT", MATHENY CLARK, 1998

Existing Tree Inventory Legend

LO	Live Oak	Quercus virginiana
SP	Sabal Palm	Sabal palmetto
RC	Red Cedar	Juniperus silicicola

Exotics / Invasive Species - X Condition Rating

AP	Australian Pine	Casuarina sp.

Existing Tree Inventory Legend

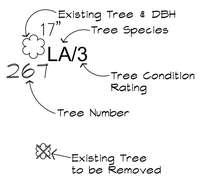

CITY OF TARPON SPRINGS TREE REPLACEMENT REQUIREMENTS

TREE REPLACEMENT REQUIRED:
EXISTING TREES TO BE REMOVED:
TREES REQUIRING REPLACEMENT (INCH FOR INCH REPLACEMENT) TREES RATED FAIR OR BETTER:
1 TREES @ 10" REPLACEMENT REQUIRED
15 PALMS @ 178" REPLACEMENT REQUIRED
TOTAL REPLACEMENT REQUIRED: 188"

TREES NOT REQUIRING REPLACEMENT (LESS THAN 19" DBH WITHIN BUILDING PAD, DRIVEWAY, S/W & TREES RATED POOR OR DECLINE/DEAD): 2 TREES @ 22", 1 PALM @ 10"

EXOTIC TREES NOT REQUIRING REPLACEMENT (AUSTRALIAN PINE)

EXISTING TREES TO REMAIN: 1 PALM @ 12"

REQUIRED EXISTING TREE REPLACEMENT REQUIRED: 198" REQUIRED

TREES REQUIRED: 79,557 SF SITE / 2000 = 40 TREES REQUIRED. 25% CAN BE PALMS
REPLACEMENT: 30 – 2" CANOPY TREES = 60" REPLACEMENT
10 – 12" PALM TREES = 120" REPLACEMENT (PALMS CAN REPLACE PALMS REMOVED)

PROPOSED TREE REPLACEMENT PROVIDED: 180"

REPLACEMENT DEFICIT: 8"

TREE REMOVAL - PROJECT OVERALL

Non-Palm Species

Tree Caliper (DBH)	Total inches removed	Percentage of total inches removed	Distribution of replacment inches based on % distribution of tree removals	Approximate net inches to be further replaced / contribution to tree bank / exempted, with final exemptions determined at individual lot building permitting	Tree Bank Contribution per inch	Total Tree Bank Contribution
1 4" to less than 8" DBH	0	0%	0.0	0.0	$ 25.00	$ -
2 8" to less than 15" DBH	10	100%	184.0	-174.0	$ 50.00	$ (8,700.00)
3 15" to less than 25" DBH	0	0%	0.0	0.0	$ 75.00	$ -
4 25" and greater DBH	0	0%	0.0	0.0	$ 100.00	$ -
Total	**10**	**100%**	**180**	**-170**	Grand total	$ (8,700.00)
Total inches replaced	**180**	Based on minimum of 30 Trees @ 2" Caliper + 10 Palms @ 12" Caliper				

Palm Species

	Total inches removed	Inches to be planted	Net inches to be replaced	Tree Bank Contribution per inch for Palm Trees	Total Tree Bank Contribution- Palms
Palms	178	170	8	$ 10.00	$ 80.00

Project Site: 79,557 sf / 2,000 = 40 Trees Required, 25% can be Palms

Minimum of 30-2" Trees + 10-12" Palms to be provided for 180" of replacement provided.
(10" provided for Non-Palm Species + 170" provided for Palm Species)

TREES & PALMS NOT REQUIRING REPLACEMENT:
TREES / PALMS LESS THAN 19" DBH WITHIN BUILDING PAD, DRIVEWAY (15' adjacent to building), SIDEWALKS & TREES RATED POOR OR DECLINE



Existing Tree Inventory preformed by ISA Certified Arborist:

Patrick Roberson
ISA Certification
#FL-1051A

ENGINEERING & LAND PLANNING
BASE INFORMATION PROVIDED BY:
SYCAMORE ENGINEERING, INC.
8370 W. Hillsborough Av., Suite 205
Tampa, Florida 33615
Phone - (813) 889-0700

ROBERSON RESOURCE GROUP
Landscape Architecture & Consulting
3152 Little Road, # 125, Trinity, Florida 34655
Phone: 727-255-4258 Web: RRGLA.com
LA0001481 & LC26000267

CONSTRUCTION PLANS ARE NOT VALID UNLESS SIGNED & EMBOSSED WITH LANDSCAPE ARCHITECT'S SEAL

Date per Digital Signature
PATRICK J. ROBERSON
FLORIDA REGISTERED LANDSCAPE ARCHITECT
NO. LA0001481

Digitally signed by Patrick Roberson
DN: c=US, st=Florida, l=Trinity, o=Roberson Resource Group, LLC, cn=Patrick Roberson, email=patrick@rrgla.com
Date: 2024.01.15 16:55:53 -05'00'

Revision	Date
Rev. per Field Review	01/15/24
Rev. per Tarpon Springs comments	10/04/21
Rev. per Tarpon Springs comments	09/02/21

Project Title
THE SHOPPES AT MERES
Tarpon Springs, Florida

EXISTING TREE INVENTORY

Project No. 20-045
Date 12/21/20
Sheet ET1

Copyright – Drawings and concepts may not be used, constructed or reproduced without written permission from Roberson Resource Group, LLC.

Public Works

April 22, 2025

Mr. J. D. Alsabbagh, P.E.
8370 W. Hillsborough Avenue, Suite 205
Tampa, FL 33615

Re: Driveway Access Waiver – The Shoppes at Meres
1098 Pinellas Ave Tarpon Springs, FL 34689 (AAW-25-00033)

Dear Mr. Alsabbagh,

Pinellas County received and evaluated your second request for a direct access connection to Meres Boulevard, a County collector roadway, for a proposed medical office development within the City of Tarpon Springs. The County Land Development Code and the County Transportation Design Manual restrict access to collector roadways when access is available from a roadway of lesser designation. The plans provided indicate that the site has access to Apricot Court, a local road.

Staff from Public Works and Development Review Services have reviewed your second request and the supporting documentation. The staff review concluded:

1. The applicant's traffic study indicates the trips estimated to enter/exit the site are very low.
2. Based on the study and analysis provided, it is our opinion that all access to the site can be effectively handled from a single access point.
3. Access can be provided from Apricot Court, as this is the road of lesser designation adjacent to the site.
4. The documentation does not indicate that a second connection on Meres Blvd is necessary.

For these reasons, it has been determined this waiver request is denied.

If you have questions, please contact Gene Crosson, Development Review Services Division Manager at 727-464-3642 or by email gcrosson@pinellas.gov

Respectfully,

Kelli Hammer Levy

Kelli Hammer Levy, Public Works Director

22211 U.S. Highway 19 North, Building 1
Clearwater, FL 33765
Phone (727) 464-8900
V/TDD (727) 464-4062
Pinellas.gov

Shoppes at Meres Crossing

Final Audit Report 2025-04-22

Created:	2025-04-22
By:	Karen Baker (kbaker@pinellascounty.org)
Status:	Signed
Transaction ID:	CBJCHBCAABAALqwDkWEldpZscyGvibGG8_IC5czdt5Kc

"Shoppes at Meres Crossing" History

Document created by Karen Baker (kbaker@pinellascounty.org)
2025-04-22 - 7:40:26 PM GMT

Document emailed to Kelli Hammer Levy (klevy@pinellas.gov) for signature
2025-04-22 - 7:40:30 PM GMT

Email viewed by Kelli Hammer Levy (klevy@pinellas.gov)
2025-04-22 - 7:40:50 PM GMT

Document e-signed by Kelli Hammer Levy (klevy@pinellas.gov)
Signature Date: 2025-04-22 - 7:44:57 PM GMT - Time Source: server

Agreement completed.
2025-04-22 - 7:44:57 PM GMT

Southwest Florida Water Management District
2379 Broad Street, Brooksville, Florida 34604-6899
(352) 796-7211 or 1-800-423-1476 (FL only)
WaterMatters.org

An Equal Opportunity Employer

Bartow Office
170 Century Boulevard
Bartow, Florida 33830-7700
(863) 534-1448 or
1-800-492-7862 (FL only)

Sarasota Office
78 Sarasota Center Boulevard
Sarasota, Florida 34240-9770
(941) 377-3722 or
1-800-320-3503 (FL only)

Tampa Office
7601 U.S. 301 North (Fort King Highway)
Tampa, Florida 33637-6759
(813) 985-7481 or
1-800-836-0797 (FL only)

June 05, 2024

Juniper Development, LLC
Attn: Abir M. Khaled
550 N. Reo St., Ste. 300
Tampa, FL 33609

Subject:	**Corrected Permit**	
	Application/Permit No.:	893272/43035342.005
	Project Name:	The Shoppes at Meres
	County:	Pinellas
	Sec/Twp/Rge:	S13/T27S/R15E

Dear Permittee:

District staff has discovered an error in the permit issued to you on June 04, 2024. The correction is:

The Water Quantity/Quality section of the permit incorrectly referenced Specific Condition 36 for the turbidity monitoring plan. The correct Specific Condition is number 35.

Please attach this letter to your permit packet.

We hope that this error has not caused an inconvenience for you. If you have any questions, please contact our office.

Sincerely,

David Kramer, P.E.
Bureau Chief
Environmental Resource Permit Bureau
Regulation Division

cc: Courtney Buck
Sycamore Engineering, Inc.
J.D. Alsabbagh, P.E.

Southwest Florida Water Management District
2379 Broad Street, Brooksville, Florida 34604-6899
(352) 796-7211 or 1-800-423-1476 (FL only)
SUNCOM 628-4150 TDD only 1-800-231-6103 (FL only)
On the Internet at: WaterMatters.org

An Equal Opportunity Employer

Bartow Service Office
170 Century Boulevard
Bartow, Florida 33830-7700
(863) 534-1448 or
1-800-492-7862 (FL only)

Sarasota Service Office
78 Sarasota Center Boulevard
Sarasota, Florida 34240-9770
(941) 377-3722 or
1-800-320-3503 (FL only)

Tampa Service Office
7601 Highway 301 North
Tampa, Florida 33637-6759
(813) 985-7481 or
1-800-836-0797 (FL only)

June 04, 2024

Juniper Development, LLC
Attn: Abir M. Khaled
550 N. Reo St., Ste. 300
Tampa, FL 33609

Subject: **Notice of Intended Agency Action - Approval**
ERP Individual Construction Major Modification

Project Name:	The Shoppes at Meres
App ID/Permit No:	893272 / 43035342.005
County:	Pinellas
Sec/Twp/Rge:	S13/T27S/R15E

Dear Permittee(s):

The Southwest Florida Water Management District (District) has completed its review of the application for Environmental Resource Permit modification. Based upon a review of the information you have submitted, the District hereby gives notice of its intended approval of the application.

The File of Record associated with this application can be viewed at http://www18.swfwmd.state.fl.us/erp/erp/search/ERPSearch.aspx and is also available for inspection Monday through Friday, except for District holidays, from 8:00 a.m. through 5:00 p.m. at the District's Tampa Service Office, 7601 U.S. Highway 301 North, Tampa, Florida 33637.

If you have any questions or concerns regarding the application or any other information, please contact the Environmental Resource Permit Bureau in the Tampa Service Office.

Sincerely,

David Kramer, P.E.
Bureau Chief
Environmental Resource Permit Bureau
Regulation Division

cc: Courtney Buck
J.D. Alsabbagh, P.E., Sycamore Engineering, Inc.

Southwest Florida Water Management District
2379 Broad Street, Brooksville, Florida 34604-6899
(352) 796-7211 or 1-800-423-1476 (FL only)
SUNCOM 628-4150 TDD only 1-800-231-6103 (FL only)
On the Internet at: WaterMatters.org

An Equal Opportunity Employer

Bartow Service Office
170 Century Boulevard
Bartow, Florida 33830-7700
(863) 534-1448 or
1-800-492-7862 (FL only)

Sarasota Service Office
78 Sarasota Center Boulevard
Sarasota, Florida 34240-9770
(941) 377-3722 or
1-800-320-3503 (FL only)

Tampa Service Office
7601 Highway 301 North
Tampa, Florida 33637-6759
(813) 985-7481 or
1-800-836-0797 (FL only)

June 04, 2024

Juniper Development, LLC
Attn: Abir M. Khaled
550 N. Reo St., Ste. 300
Tampa, FL 33609

Subject: **Notice of Agency Action - Approval**
ERP Individual Construction Major Modification

Project Name:	The Shoppes at Meres
App ID/Permit No:	893272 / 43035342.005
County:	Pinellas
Sec/Twp/Rge:	S13/T27S/R15E

Dear Permittee(s):

The Southwest Florida Water Management District (District) is in receipt of your application for the Environmental Resource Permit modification. Based upon a review of the information you submitted, the application is approved.

Please refer to the attached Notice of Rights to determine any legal rights you may have concerning the District's agency action on the permit application described in this letter.

If approved construction plans are part of the permit, construction must be in accordance with these plans. These drawings are available for viewing or downloading through the District's Application and Permit Search Tools located at www.WaterMatters.org/permits.

The District's action in this matter only becomes closed to future legal challenges from members of the public if such persons have been properly notified of the District's action and no person objects to the District's action within the prescribed period of time following the notification. The District does not publish notices of agency action. If you wish to limit the time within which a person who does not receive actual written notice from the District may request an administrative hearing regarding this action, you are strongly encouraged to publish, at your own expense, a notice of agency action in the legal advertisement section of a newspaper of general circulation in the county or counties where the activity will occur. Publishing notice of agency action will close the window for filing a petition for hearing. Legal requirements and instructions for publishing notices of agency action, as well as a noticing form that can be used, are available from the District's website at www.WaterMatters.org/permits/noticing. If you publish notice of agency action, a copy of the affidavit of publication provided by the newspaper should be sent to the District's Tampa Service Office for retention in this permit's File of Record.

If you have any questions or concerns regarding your permit or any other information, please contact the Environmental Resource Permit Bureau in the Tampa Service Office.

Sincerely,

David Kramer, P.E.
Bureau Chief
Environmental Resource Permit Bureau
Regulation Division

Enclosures: Approved Permit w/Conditions Attached
As-Built Certification and Request for Conversion to Operation Phase
Notice of Authorization to Commence Construction
Notice of Rights

cc: Courtney Buck
J.D. Alsabbagh, P.E., Sycamore Engineering, Inc.

SOUTHWEST FLORIDA WATER MANAGEMENT DISTRICT
ENVIRONMENTAL RESOURCE

INDIVIDUAL CONSTRUCTION MAJOR MODIFICATION
PERMIT NO. 43035342.005

EXPIRATION DATE: June 04, 2029 **PERMIT ISSUE DATE:** June 04, 2024

This permit is issued under the provisions of Chapter 373, Florida Statutes, (F.S.), and the Rules contained in Chapter 62-330, Florida Administrative Code, (F.A.C.). The permit authorizes the Permittee to proceed with the construction of a surface water management system in accordance with the information outlined herein and shown by the application, approved drawings, plans, specifications, and other documents, attached hereto and kept on file at the Southwest Florida Water Management District (District). Unless otherwise stated by permit specific condition, permit issuance constitutes certification of compliance with state water quality standards under Section 401 of the Clean Water Act, 33 U.S.C. 1341. All construction, operation and maintenance of the surface water management system authorized by this permit shall occur in compliance with Florida Statutes and Administrative Code and the conditions of this permit.

PROJECT NAME:	The Shoppes at Meres
GRANTED TO:	Juniper Development, LLC Attn: Abir M. Khaled 550 N. Reo St., Ste. 300 Tampa, FL 33609
OTHER PERMITTEES:	N/A

ABSTRACT: This permit is for the modification of (not yet constructed) a stormwater management system associated with Permit No. 43035342.002 and its modification, Permit No. 43035342.004. The system will accommodate runoff from a 1.60-acre commercial facility including a building and associated vehicular use areas. The proposed stormwater management system includes one retention pond. The project is located at the northwest corner of Meres Boulevard and South Pinellas Avenue (Alt US 19), in Pinellas County. Information regarding the wetlands and/or surface waters is stated below and on the permitted construction drawings for the project.

This Permit Modification No. 43035342.005, amends the previously issued Permit Nos. 43035342.002 and 43035342.004, and all conditions are replaced by the conditions herein.

OP. & MAIN. ENTITY:	Juniper Development, LLC
OTHER OP. & MAIN. ENTITY:	N/A
COUNTY:	Pinellas
SEC/TWP/RGE:	S13/T27S/R15E
TOTAL ACRES OWNED OR UNDER CONTROL:	1.83
PROJECT SIZE:	1.60 Acres
LAND USE:	Semi-Public
DATE APPLICATION FILED:	April 24, 2024
AMENDED DATE:	N/A

I. Water Quantity/Quality

POND No.	Area Acres @ Top of Bank	Treatment Type
1	0.08	ON-LINE RETENTION
	Total: **0.08**	

Water Quantity/Quality Comments: The proposed pond provides treatment for runoff from the site via online retention. Attenuation is not required as the project site discharges to an infinite basin, the Anclote River Bayou Complex. Portions of work activities are located within the Anclote River Bayou Complex, a temporary mixing zone for turbidity is granted (refer to Specific Condition 35 herein). The plans and calculations reflect the National Geodetic Vertical Datum of 1929 (NGVD 29). In order to convert to the North American Vertical Datum of 1988 (NAVD 88), subtract 0.85 foot.

A mixing zone is required.
A variance is not required.

II. 100-Year Floodplain

Encroachment (Acre-Feet of fill)	Compensation (Acre-Feet of excavation)	Compensation Type	Encroachment Result* (feet)
0.00	0.00	No Encroachment	N/A

Floodplain Comments: The onsite floodplain is due to tidal surge, for which floodplain compensation is not required. The project proposes no fill placement within a known 100-year riverine floodplain or depression storage areas associated with 100-year riverine floodplain.

*Depth of change in flood stage (level) over existing receiving water stage resulting from floodplain encroachment caused by a project that claims Minimal Impact type of compensation.

III. Environmental Considerations

Wetland/Other Surface Water Information

Wetland/Other Surface Water Name	Total Acres	Not Impacted Acres	Permanent Impacts		Temporary Impacts	
			Acres	Functional Loss*	Acres	Functional Loss*
Low Salt Marsh (onsite)	0.44	0.11	0.33	0.19	0.00	0.00
Mangrove Fringe Forest (onsite)	0.38	0.06	0.32	0.18	0.00	0.00
Mangrove/Pepper Forest (onsite)	0.38	0.05	0.33	0.17	0.00	0.00
Lowes Swale #1 (mitigation area)	0.01	0.00	0.00	0.00	0.01	0.00
Lowes Wetland Encroachment Area #1 (mitigation area)	0.07	0.00	0.00	0.00	0.07	0.00
Lowes Wetlands Encroachment Buffer Area #1 (mitigation area)	0.02	0.00	0.00	0.00	0.02	0.00
Swale #2 (mitigation area)	0.03	0.00	0.00	0.00	0.03	0.00
Enhancement Area 3 (mitigation area)	3.07	1.50	0.00	0.00	1.57	0.00
Total:	**4.40**	**1.72**	**0.98**	**0.54**	**1.70**	**0.00**

*** For impacts that do not require mitigation, their functional loss is not included.**

Wetland/Other Surface Water Comments:

There are 4.40 acres of wetlands (FLUCCS 612, 630, and 642) located within the project area for this ERP modification. Permanent filling impacts to 0.98 acre of wetlands will occur for construction of the project. Permanent filling impacts to 0.98 acres of qualifying wetlands were evaluated using the Uniform Mitigation Assessment Method (UMAM) as required pursuant to Chapter 62-345, F.A.C. The results of the UMAM analysis indicate a functional loss of 0.54 units due to the permanent impacts proposed. Temporary dredging and filling impacts to 1.70 acres of wetlands will occur for the creation and enhancement of wetlands within the offsite mitigation area. There are no other surface water features located within the project area.

Mitigation Information

Name	Creation		Enhancement		Preservation		Restoration		Enhancement +Preservation		Other	
	Acres	Functional Gain	Acres	Functional Gain	Acres	Functional Gain	Acres	Functional Gain	Acres	Functional Gain	Acres	Functional Gain
Wetland Creation Areas 1 & 2	0.91	0.39	0.00	0.00	0.00	0.00	0.00	0.00	0.00	0.00	0.00	0.00
Wetland Enhancement & Buffer	0.00	0.00	3.95	0.20	0.00	0.00	0.00	0.00	0.00	0.00	0.00	0.00
Total:	**0.91**	**0.39**	**3.95**	**0.20**	**0.00**	**0.00**	**0.00**	**0.00**	**0.00**	**0.00**	**0.00**	**0.00**

Mitigation Comments:
Wetland mitigation for permanent filling impacts will be provided by the offsite creation of 0.91 acre of mangrove swamp and saltwater marsh (FLUCCS 612 and 642) and enhancement of 3.95 acres of mixed forested wetlands (FLUCCS 630). The results of the UMAM analysis indicate a functional gain of 0.59 units which offsets the 0.54 units of functional loss proposed to wetland habitat. The difference between the functional gain and functional loss will not be available for future mitigation use.

Wetland mitigation will not be required for temporary impacts within the mitigation area pursuant to Subsection 10.2.2 of the ERP Applicant's Handbook Vol. I. Under this Section, wetland mitigation is not required for impacts that have been determined to be de minimis to fish, wildlife and listed species.

Specific Conditions

1. If the ownership of the project area covered by the subject permit is divided, with someone other than the Permittee becoming the owner of part of the project area, this permit may be terminated, unless the terms of the permit are modified by the District or the permit is transferred pursuant to Rule 40D-1.6105, F.A.C. In such situations, each land owner shall obtain a permit (which may be a modification of this permit) for the land owned by that person. This condition shall not apply to the division and sale of lots or units in residential subdivisions or condominiums.

2. The Permittee shall retain the design professional registered or licensed in Florida, to conduct on-site observations of construction and assist with the as-built certification requirements of this project. The Permittee shall inform the District in writing of the name, address and phone number of the design professional so employed. This information shall be submitted prior to construction.

3. **WETLAND MITIGATION SUCCESS CRITERIA MITIGATION CREATION AREA 1 and 2 (0.91 Acre)**

   Mitigation is expected to offset adverse impacts to wetlands and other surface waters caused by regulated activities and to achieve viable, sustainable ecological and hydrological wetland functions. Wetlands constructed for mitigation purposes will be considered successful and will be released from monitoring and reporting requirements when the following criteria are met continuously for a period of at least one year without intervention in the form of irrigation or the addition or removal of vegetation.

   a. The mitigation area can be reasonably expected to develop into a Saltwater Marsh (FLUCCS 642) as determined by the Florida Land Use and Cover and Forms Classification System (third edition; January 1999).

   b. Topography, water depth and water level fluctuation in the mitigation area are characteristic of the wetland/surface water type specified in criterion "a."

   c. Planted or recruited herbaceous or shrub species (or plant species providing the same function) shall meet the criteria specified:
   Zone: Low Marsh (Areas C)
   Percent Cover: 85
   Species: *Spartina alterniflora, Juncus roemerianus*

   Zone: Wetland Creation Areas B
   Percent Cover: 80
   Species: *Paspalum disticum, Sprorbolus virginicus, Avicennia germinans, Rhizophoria mangle*

   Zone: Wetland Creation Areas A
   Percent Cover: 70
   Species: *Spartina alterniflora, Distichis spicata*

   Zone: Transitional Buffer Areas
   Percent Cover: 50
   Species: *Helianthus floridanus, Spartina bakeri, Spartina patens, Callicarpa americana, Forestiera segregata, Pinus elliottii*

   d. Planted or recruited tree species that are greater than or equal to 12 feet in height and established for more than 3 years shall meet the criteria specified:

   e. Species composition of recruiting wetland vegetation are indicative of the wetland type specified in criterion "a."

   f. Coverage by nuisance or exotic species does not exceed five (5) percent at any area within the mitigation site and 5 percent for the entire mitigation site.

   g. The wetland mitigation area can be determined to be a wetland or other surface water according to Chapter

62-340, F.A.C.

The mitigation area may be released from monitoring and reporting requirements and be deemed successful at any time during the monitoring period if the Permittee demonstrates that the conditions in the mitigation area have adequately replaced the wetland and surface water functions affected by the regulated activity and that the site conditions are sustainable.

4. **WETLAND MITIGATION SUCCESS CRITERIA WETLAND ENHANCEMENT AREA AND BUFFER (3.95 Acres)**

Mitigation is expected to offset adverse impacts to wetlands and other surface waters caused by regulated activities and to achieve viable, sustainable ecological and hydrological wetland functions. Wetlands constructed for mitigation purposes will be considered successful and will be released from monitoring and reporting requirements when the following criteria are met continuously for a period of at least one year without intervention in the form of irrigation or the addition or removal of vegetation.

a. The mitigation area can be reasonably expected to develop into a Mixed Forested Wetland (FLUCCS 630) as determined by the Florida Land Use and Cover and Forms Classification System (third edition; January 1999).

b. Topography, water depth and water level fluctuation in the mitigation area are characteristic of the wetland/surface water type specified in criterion "a."

c. Planted or recruited herbaceous or shrub species (or plant species providing the same function) shall meet the criteria specified:
Zone: Understory
Percent Cover: 30
Species: *Itea virginica, Cephalanthus occidentalis, Blechnum serrulatum, Callicarpa Americana, Spartina bakeri*

d. Planted or recruited tree species that are greater than or equal to 12 feet in height and established for more than 3 years shall meet the criteria specified:
Zone: Canopy
Density (#/Acre): 200
Species: *Persea palustis, Magnolia virginiana, Liquidambar styraciflua, Quercus virginiana, Pinus elliottii*

e. Species composition of recruiting wetland vegetation are indicative of the wetland type specified in criterion "a."

f. Coverage by nuisance or exotic species does not exceed five (5) percent at any area within the mitigation site and five (5) percent for the entire mitigation site.

g. The wetland mitigation area can be determined to be a wetland or other surface water according to Chapter 62-340, F.A.C.

The mitigation area may be released from monitoring and reporting requirements and be deemed successful at any time during the monitoring period if the Permittee demonstrates that the conditions in the mitigation area have adequately replaced the wetland and surface water functions affected by the regulated activity and that the site conditions are sustainable.

5. The Permittee shall monitor and maintain the wetland mitigation areas until the criteria set forth in the Wetland Mitigation Success Criteria Conditions above are met. The Permittee shall perform corrective actions identified by the District if the District identifies a wetland mitigation deficiency.

6. The Permittee shall undertake required maintenance activities within the wetland mitigation areas as needed at any time between mitigation area construction and termination of monitoring, with the exception of the final year. Maintenance shall include the manual removal of all nuisance and exotic species, with sufficient frequency that their combined coverage at no time exceeds the Wetland Mitigation Success Criteria Conditions above. Herbicides shall not be used without the prior written approval of the District.

7. A Wetland Mitigation Completion Report shall be submitted to the District within 30 days of completing construction and planting of the wetland mitigation areas. Upon District inspection and approval of the mitigation areas, the monitoring program shall be initiated with the date of the District field inspection being the construction completion date of the mitigation areas. Monitoring events shall occur between March 1 and November 30 of each year. An Annual Wetland Monitoring Report shall be submitted upon the anniversary date of District approval to initiate monitoring.

   Annual reports shall provide documentation that a sufficient number of maintenance inspection/activities were conducted to maintain the mitigation areas in compliance according to the Wetland Mitigation Success Criteria Conditions above. Note that the performance of maintenance inspections and maintenance activities will normally need to be conducted more frequently than the collection of other monitoring data to maintain the mitigation areas in compliance with the Wetland Mitigation Success Criteria Conditions above.

   Monitoring Data shall be collected semi-annually.

8. Termination of monitoring for the wetland mitigation areas shall be coordinated with the District by:

   a. notifying the District in writing when the criteria set forth in the Wetland Mitigation Success Criteria Conditions have been achieved;

   b. submitting documentation, including the date, that all maintenance activities in the wetland mitigation areas have been suspended including, but not limited to, irrigation and addition or removal of vegetation; and

   c. submitting a monitoring report to the District one year following the written notification and suspension of maintenance activities.

   Upon receipt of the monitoring report, the District will evaluate the wetland mitigation sites to determine if the Mitigation Success Criteria Conditions have been met and maintained. The District will notify the Permittee in writing of the evaluation results. The Permittee shall perform corrective actions for any portions of the wetland mitigation areas that fail to maintain the criteria set forth in the Wetland Mitigation Success Criteria Conditions.

9. Following the District's determination that the wetland mitigation has been successfully completed, the Permittee shall operate and maintain the wetland mitigation areas such that they remain in their current or intended condition for the life of the system. The Permittee must perform corrective actions for any portions of the wetland mitigation areas where conditions no longer meet the criteria set forth in the Wetland Mitigation Success Criteria Conditions.

10. The Permittee shall commence construction of the mitigation areas within 30 days of wetland impacts, if wetland impacts occur between February 1 and August 31. If wetland impacts occur between September 1 and January 31, construction of the mitigation areas shall commence by March 1. In either case, construction of the mitigation areas shall be completed within 120 days of the commencement date unless a time extension is approved in writing by the District.

11. Wetland buffers shall remain in an undisturbed condition except for approved drainage facility construction/maintenance.

12. The following boundaries, as shown on the approved construction drawings, shall be clearly delineated on the site prior to initial clearing or grading activities:

    a. wetland and surface water areas

    b. wetland buffers

    c. limits of approved wetland impacts

The delineation shall endure throughout the construction period and be readily discernible to construction and District personnel.

13. For dry bottom retention systems, the retention area(s) shall become dry within 72 hours after a rainfall event. If a retention area is regularly wet, this situation shall be deemed to be a violation of this permit.

14. This Permit Modification No. 43035342.005, amends the previously issued Permit No. 43035342.004, and all conditions are replaced by the conditions herein.

This Permit Modification No. 43035342.005, amends the previously issued Permit No. 43035342.002, and all conditions are replaced by the conditions herein.

15. If limestone bedrock is encountered during construction of the stormwater management system, the District must be notified and construction in the affected area shall cease.

16. The Permittee shall notify the District of any sinkhole development in the stormwater management system within 48 hours of discovery and must submit a detailed sinkhole evaluation and repair plan for approval by the District within 30 days of discovery.

17. The Permittee shall execute the final draft financial responsibility instrument approved by the District prior to initiating activities authorized by this permit. The final draft financial responsibility instrument shall be consistent with the draft instrument submitted with the permit application and approved by this permit.

18. The Permittee shall submit the original executed financial responsibility instrument to the District's Environmental Compliance Manager, at the Tampa Service Office.

19. The Permittee shall provide the financial responsibility required by Rule 62-330.301(5), Florida Administrative Code until the District determines that the specific success criteria contained in this permit have been met; or the District approves a request to transfer the permit to a new owner and receives an acceptable substitute financial responsibility mechanism from the new owner.

20. The Permittee may request, in writing, a release from the obligation to maintain certain amounts of the financial assurance required by this permit as phases of the mitigation plan are successfully completed. The request shall include documentation that the mitigation phase or phases have been completed and payment for their completion has been made. Following the District's verification that the phase or phases have been completed in accordance with the mitigation plan, the District will authorize release from the applicable portion of the financial assurance obligation.

21. The District will notify the Permittee within 30 days of its determination that the specific success criteria contained in this permit have been met. Concurrent with this notification, the District will authorize, in writing, the appropriate entity to cancel or terminate the financial responsibility instrument.

22. The Permittee's failure to comply with the terms and conditions of this permit pertaining to the successful completion of all mitigation activities in accordance with the mitigation plan shall be deemed a violation of Chapter 40D-4, Florida Administrative Code. In addition to other remedies that the District may have, the District may draw upon the financial responsibility instrument for any funds necessary to remedy a violation, upon such notice to the Permittee as may be specified in the financial responsibility instrument or if none, upon reasonable notice.

23. In the event of bankruptcy or insolvency of the issuing institution; or the suspension or revocation of the authority of the issuing institution to issue letters of credit or performance bonds, the Permittee shall be deemed without the required financial assurance and shall have 60 days to reestablish the financial assurance required by Rule 40D-4.301(1)(j), Florida Administrative Code.

24. The Permitted Plan Set for this project includes the set received by the District on May 30, 2024.

25. The operation and maintenance entity shall provide for the inspection of the permitted project after conversion of the permit to the operation and maintenance phase. For systems utilizing retention or wet detention, the inspections shall be performed five (5) years after operation is authorized and every five (5) years thereafter.

The operation and maintenance entity must maintain a record of each inspection, including the date of inspection, the name and contact information of the inspector, whether the system was functioning as designed and permitted, and make such record available upon request of the District.

Within 30 days of any failure of a stormwater management system or deviation from the permit, an inspection report shall be submitted using Form 62-330.311(1), “Operation and Maintenance Inspection Certification” describing the remedial actions taken to resolve the failure or deviation.

26. District staff must be notified in advance of any proposed construction dewatering. If the dewatering activity is likely to result in offsite discharge or sediment transport into wetlands or surface waters, a written dewatering plan must either have been submitted and approved with the permit application or submitted to the District as a permit prior to the dewatering event as a permit modification. A water use permit may be required prior to any use exceeding the thresholds in Chapter 40D-2, F.A.C.

27. Off-site discharges during construction and development shall be made only through the facilities authorized by this permit. Water discharged from the project shall be through structures having a mechanism suitable for regulating upstream stages. Stages may be subject to operating schedules satisfactory to the District.

28. The permittee shall complete construction of all aspects of the stormwater management system, including wetland compensation (grading, mulching, planting), water quality treatment features, and discharge control facilities prior to beneficial occupancy or use of the development being served by this system.

29. The following shall be properly abandoned and/or removed in accordance with the applicable regulations:

    a. Any existing wells in the path of construction shall be properly plugged and abandoned by a licensed well contractor.

    b. Any existing septic tanks on site shall be abandoned at the beginning of construction.

    c. Any existing fuel storage tanks and fuel pumps shall be removed at the beginning of construction.

30. All stormwater management systems shall be operated to conserve water in order to maintain environmental quality and resource protection; to increase the efficiency of transport, application and use; to decrease waste; to minimize unnatural runoff from the property and to minimize dewatering of offsite property.

31. Each phase or independent portion of the permitted system must be completed in accordance with the permitted plans and permit conditions prior to the occupation of the site or operation of site infrastructure located within the area served by that portion or phase of the system. Each phase or independent portion of the system must be completed in accordance with the permitted plans and permit conditions prior to transfer of responsibility for operation and maintenance of that phase or portion of the system to a local government or other responsible entity.

32. This permit is valid only for the specific processes, operations and designs indicated on the approved drawings or exhibits submitted in support of the permit application. Any substantial deviation from the approved drawings, exhibits, specifications or permit conditions, including construction within the total land area but outside the approved project area(s), may constitute grounds for revocation or enforcement action by the District, unless a modification has been applied for and approved. Examples of substantial deviations include excavation of ponds, ditches or sump areas deeper than shown on the approved plans.

33. Issuance of this authorization also constitutes a finding of consistency with Florida's Coastal Zone Management Program, as required by Section 307 of the Coastal Zone Management Act.

34. This permit does not authorize the Permittee to cause any adverse impact to or "take" of state listed species and

other regulated species of fish and wildlife. Compliance with state laws regulating the take of fish and wildlife is the responsibility of the owner or applicant associated with this project. Please refer to Chapter 68A-27 of the Florida Administrative Code for definitions of "take" and a list of fish and wildlife species. If listed species are observed onsite, FWC staff are available to provide decision support information or assist in obtaining the appropriate FWC permits. Most marine endangered and threatened species are statutorily protected and a "take" permit cannot be issued. Requests for further information or review can be sent to FWCConservationPlanningServices@MyFWC.com.

35. Construction turbidity monitoring shall be performed in accordance with the site specific turbidity monitoring plan received by the District on May 15, 2024.

GENERAL CONDITIONS

1. The general conditions attached hereto as Exhibit "A" are hereby incorporated into this permit by reference and the Permittee shall comply with them.

David Kramer, P.E.

Authorized Signature

EXHIBIT A

GENERAL CONDITIONS:

1 The following general conditions are binding on all individual permits issued under this chapter, except where the conditions are not applicable to the authorized activity, or where the conditions must be modified to accommodate, project-specific conditions.

a. All activities shall be implemented following the plans, specifications and performance criteria approved by this permit. Any deviations must be authorized in a permit modification in accordance with Rule 62-330.315, F.A.C., or the permit may be revoked and the permittee may be subject to enforcement action.

b. A complete copy of this permit shall be kept at the work site of the permitted activity during the construction phase, and shall be available for review at the work site upon request by the Agency staff. The permittee shall require the contractor to review the complete permit prior to beginning construction.

c. Activities shall be conducted in a manner that does not cause or contribute to violations of state water quality standards. Performance-based erosion and sediment control best management practices shall be installed immediately prior to, and be maintained during and after construction as needed, to prevent adverse impacts to the water resources and adjacent lands. Such practices shall be in accordance with the *State of Florida Erosion and Sediment Control Designer and Reviewer Manual (Florida Department of Environmental Protection and Florida Department of Transportation June 2007)*, and the *Florida Stormwater Erosion and Sedimentation Control Inspector's Manual (Florida Department of Environmental Protection, Nonpoint Source Management Section, Tallahassee, Florida, July 2008)*, which are both incorporated by reference in subparagraph 62-330.050(8)(b)5, F.A.C., unless a project-specific erosion and sediment control plan is approved or other water quality control measures are required as part of the permit.

d. At least 48 hours prior to beginning the authorized activities, the permittee shall submit to the Agency a fully executed Form 62-330.350(1), "Construction Commencement Notice,"[effective date], incorporated by reference herein (<http://www.flrules.org/Gateway/reference.asp?No=Ref-02505>), indicating the expected start and completion dates. A copy of this form may be obtained from the Agency, as described in subsection 62-330.010(5),F.A.C. However, for activities involving more than one acre of construction that also require a NPDES stormwater construction general permit, submittal of the Notice of Intent to Use Generic Permit for Stormwater Discharge from Large and Small Construction Activities, DEP Form 62-621.300(4)(b), shall also serve as notice of commencement of construction under this chapter and, in such a case, submittal of Form 62-330.350(1) is not required.

e. Unless the permit is transferred under Rule 62-330.340, F.A.C., or transferred to an operating entity under Rule 62-330.310, F.A.C., the permittee is liable to comply with the plans, terms and conditions of the permit for the life of the project or activity.

f. Within 30 days after completing construction of the entire project, or any independent portion of the project, the permittee shall provide the following to the Agency, as applicable:

1. For an individual, private single-family residential dwelling unit, duplex, triplex, or quadruplex - "Construction Completion and Inspection Certification for Activities Associated with a Private Single-Family Dwelling Unit" [Form 62-330.310(3)]; or

2. For all other activities - "As-Built Certification and Request for Conversion to Operation Phase" [Form 62-330.310(1)].

3. If available, an Agency website that fulfills this certification requirement may be used in lieu of the form.

g. If the final operation and maintenance entity is a third party:

1. Prior to sales of any lot or unit served by the activity and within one year of permit issuance, or within 30 days of as- built certification, whichever comes first, the permittee shall submit, as applicable, a copy of the operation and maintenance documents (see sections 12.3 thru 12.3.4 of Volume I) as filed with the Department of State, Division of Corporations and a copy of any easement, plat, or deed restriction needed to operate or maintain the project, as recorded with the Clerk of the Court in the County in which the activity is located.

2. Within 30 days of submittal of the as- built certification, the permittee shall submit "Request for Transfer of Environmental Resource Permit to the Perpetual Operation and Maintenance Entity" [Form 62-330.310 (2)] to transfer the permit to the operation and maintenance entity, along with the documentation requested in the form. If available, an Agency website that fulfills this transfer requirement may be used in lieu of the form.

h. The permittee shall notify the Agency in writing of changes required by any other regulatory agency that require changes to the permitted activity, and any required modification of this permit must be obtained prior to implementing the changes.

i. This permit does not:

1. Convey to the permittee any property rights or privileges, or any other rights or privileges other than those specified herein or in Chapter 62-330, F.A.C.;

2. Convey to the permittee or create in the permittee any interest in real property;

3. Relieve the permittee from the need to obtain and comply with any other required federal, state, and local authorization, law, rule, or ordinance; or

4. Authorize any entrance upon or work on property that is not owned, held in easement, or controlled by the permittee.

j. Prior to conducting any activities on state-owned submerged lands or other lands of the state, title to which is vested in the Board of Trustees of the Internal Improvement Trust Fund, the permittee must receive all necessary approvals and authorizations under Chapters 253 and 258, F.S. Written authorization that requires formal execution by the Board of Trustees of the Internal Improvement Trust Fund shall not be considered received until it has been fully executed.

k. The permittee shall hold and save the Agency harmless from any and all damages, claims, or liabilities that may arise by reason of the construction, alteration, operation, maintenance, removal, abandonment or use of any project authorized by the permit.

l. The permittee shall notify the Agency in writing:

1. Immediately if any previously submitted information is discovered to be inaccurate; and

2. Within 30 days of any conveyance or division of ownership or control of the property or the system, other than conveyance via a long-term lease, and the new owner shall request transfer of the permit in accordance with Rule 62-330.340, F.A.C. This does not apply to the sale of lots or units in residential or commercial subdivisions or condominiums where the stormwater management system has been completed and converted to the operation phase.

m. Upon reasonable notice to the permittee, Agency staff with proper identification shall have permission to enter, inspect, sample and test the project or activities to ensure conformity with the plans and specifications authorized in the permit.

n. If any prehistoric or historic artifacts, such as pottery or ceramics, stone tools or metal implements, dugout canoes, or any other physical remains that could be associated with Native American cultures, or early colonial or American settlement are encountered at any time within the project site area, work involving

subsurface disturbance in the immediate vicinity of such discoveries shall cease. The permittee or other designee shall contact the Florida Department of State, Division of Historical Resources, Compliance and Review Section, at (850) 245-6333 or (800) 847-7278, as well as the appropriate permitting agency office. Such subsurface work shall not resume without verbal or written authorization from the Division of Historical Resources. If unmarked human remains are encountered, all work shall stop immediately and notification shall be provided in accordance with Section 872.05, F.S. (2012).

o. Any delineation of the extent of a wetland or other surface water submitted as part of the permit application, including plans or other supporting documentation, shall not be considered binding unless a specific condition of this permit or a formal determination under Rule 62-330.201, F.A.C., provides otherwise.

p. The permittee shall provide routine maintenance of all components of the stormwater management system to remove trapped sediments and debris. Removed materials shall be disposed of in a landfill or other uplands in a manner that does not require a permit under Chapter 62-330, F.A.C., or cause violations of state water quality standards.

q. This permit is issued based on the applicant's submitted information that reasonably demonstrates that adverse water resource-related impacts will not be caused by the completed permit activity. If any adverse impacts result, the Agency will require the permittee to eliminate the cause, obtain any necessary permit modification, and take any necessary corrective actions to resolve the adverse impacts.

r. A Recorded Notice of Environmental Resource Permit may be recorded in the county public records in accordance with Rule 62-330.090(7), F.A.C. Such notice is not an encumbrance upon the property.

2. In addition to those general conditions in subsection (1) above, the Agency shall impose any additional project-specific special conditions necessary to assure the permitted activities will not be harmful to the water resources, as set forth in Rules 62-330.301 and 62-330.302, F.A.C., Volumes I and II, as applicable, and the rules incorporated by reference in this chapter.

SOUTHWEST FLORIDA
WATER MANAGEMENT DISTRICT

NOTICE OF
AUTHORIZATION
TO COMMENCE CONSTRUCTION

The Shoppes at Meres
PROJECT NAME

Semi-Public
PROJECT TYPE

Pinellas
COUNTY

S13/T27S/R15E
SEC(S)/TWP(S)/RGE(S)

Juniper Development, LLC
PERMITTEE See permit for additional permittees

APPLICATION ID/PERMIT NO: 893272 / 43035342.005
DATE ISSUED: June 04, 2024

David Kramer, P.E.
Issuing Authority

THIS NOTICE SHOULD BE CONSPICUOUSLY DISPLAYED AT THE SITE OF THE WORK

Patricia McNeese

From: J.D. Alsabbagh, PE <jalsabbagh@sycamoreeng.com>
Sent: Monday, July 7, 2025 3:04 PM
To: Patricia McNeese
Cc: 'Anthony Morales, EI'
Subject: FW: Receipt of Application Notification - SAJ-2009-02970-RSS (JUNIPER DEVELOPMENT, LLC / SEAWAL / THE SHOPPES AT MERES BOULEVARD / PINELLAS)

External sender <jalsabbagh@sycamoreeng.com>
Make sure you trust this sender before taking any actions.

Pat
Just update that we had not heard back from ACOE yet which is typical.

Thanks

J.D. Alsabbagh, P.E.
Sycamore Engineering, Inc.
8370 W. Hillsborough Avenue, Suite 205
Tampa, Florida 33615
Direct: (813) 889-0700
Fax: (813) 889-0788
Cell: (813) 924-1704
E-mail: jalsabbagh@sycamoreeng.com

Civil Engineering • Surveying & Mapping • Land Planning • Construction Management

🛠 Please consider the environment before printing this e-mail

This transmission is only for the addressee and may contain information that is privileged and confidential. Unauthorized use, copying, distribution or other disclosure of this transmission is strictly prohibited. If you have received this in error, notify us immediately by phone; then destroy the original. Thank you.

From: Garcia, Zoe A CIV USARMY CESAJ (USA) <Zoe.A.Garcia@usace.army.mil>
Sent: Friday, May 9, 2025 9:05 AM
To: jalsabbagh@sycamoreeng.com; akhaled@sycamoreeng.com
Cc: Somerville, Rachel S CIV SAJ <Rachel.S.Somerville@usace.army.mil>
Subject: Receipt of Application Notification – SAJ-2009-02970-RSS (JUNIPER DEVELOPMENT, LLC / SEAWAL / THE SHOPPES AT MERES BOULEVARD / PINELLAS)

Your application for a Department of the Army Corps of Engineers permit for the project referenced in the above subject line has been assigned to Rachel Somerville for review under file number SAJ-2009-02970-RSS. Please use this number in all future correspondence for this application.

We request that you allow 10 business days before reaching out to the project manager, copied on this message. You may reach the project manager via email at rachel.s.somerville@usace.army.mil or by calling telephone number 904-232-1444 (email is best).

Applications are reviewed in the order in which they are received, and additional information may be requested once the project manager reviews your application.

Be advised that work performed in waters of the United States and/or the discharge of dredged or fill material into adjacent wetlands without Department of the Army (DA) authorization could subject you to enforcement action. Receipt of a permit from the Florida Department of Environmental Protection, Water Management Districts, and/or other state or local agencies does not obviate the requirement for obtaining DA authorization for the work described above prior to commencing work.

Thanks.

Very Respectfully,

Zoé A. García
Regulatory Division
Jacksonville District
U. S. Army Corps of Engineers

Patricia McNeese

From: J.D. Alsabbagh, PE <jalsabbagh@sycamoreeng.com>
Sent: Wednesday, October 1, 2025 11:40 AM
To: Patricia McNeese
Subject: FW: WND-25-00789/ Juniper Development/1098 Pinellas Ave
Attachments: Application Page 2 - WND-25-00789.pdf

Follow Up Flag: Follow up
Flag Status: Flagged

Warning: Unusual link
This message contains an unusual link, which may lead to a malicious site. Confirm the message is safe before clicking any links.

Pat
Please see below from Pinellas County for Dredge & Fill permit. They required the City approval before processing the permit. Can you please schedule our P & Z for this project.

Thanks

J.D. Alsabbagh, P.E.
Sycamore Engineering, Inc.
8370 W. Hillsborough Avenue, Suite 205
Tampa, Florida 33615
Direct: (813) 889-0700
Fax: (813) 889-0788
Cell: (813) 924-1704
E-mail: jalsabbagh@sycamoreeng.com

Civil Engineering • Surveying & Mapping • Land Planning • Construction Management

🛠 Please consider the environment before printing this e-mail

This transmission is only for the addressee and may contain information that is privileged and confidential. Unauthorized use, copying, distribution or other disclosure of this transmission is strictly prohibited. If you have received this in error, notify us immediately by phone; then destroy the original. Thank you.

From: Water & Navigation Permitting <WNPermitIntake@pinellas.gov>
Sent: Tuesday, September 30, 2025 5:24 PM
To: jalsabbagh@sycamoreeng.com; davidnek@capdeseng.com
Cc: Water & Navigation Permitting <WNPermitIntake@pinellas.gov>
Subject: WND-25-00789/ Juniper Development/1098 Pinellas Ave

Good afternoon,

Intake is currently in the process of an initial assessment of the above-mentioned application, the following items were found:

License Professional

- License CGC1525725 is currently disabled and doesn't currently have USL&H or Worker's Comp or General Liability, with the Pinellas County Construction Licensing Board (PCCLB). Please send an updated Certificate of Insurance (COI) that includes USL&H, Worker's Comp, and General Liability coverage to: insurancecertificates@pinellas.gov

For any questions or concerns, feel free to contact the PCCLB

- Phone: (727) 582-3100
- Email: pcclb@pinellas.gov

City approval

- Pinellas County Water and Navigation requires municipal approval prior to reviewing applications. Since this application is for a property located in Tarpon Springs, City approval from Tarpon Springs is required on the drawing page and the proposed plans.

Drawing Page Requirements

- Waterfront width
- Waterway width

Application Page 2 – Please see attached

- Date the applicant assumed ownership of the property - 03/23/2011
- Fill
    - Purpose of the fill
        - Remove the words "more less"
- Uncheck "Maintenance" as the proposed work is fill not dredging

Please note the initial assessment is for application completion and should not be considered a full review of the proposed project. Once your application goes forward for a full review, additional information may be requested.

Feel free to reach out with any questions or concerns.

Respectfully,

Laura Valletti (she/her)
Business Support Specialist 1
Water and Navigation
Pinellas County Government
22211 U. S. 19 N, Building 10
Clearwater, FL 33765

Lvalletti@pinellas.gov
Office (727) 464 4170

Pinellas County Pinellas.gov

Follow Pinellas County:



www.pinellascounty.org
Subscribe to county updates and news

All government correspondence is subject to the public records law.

Important - Our work place is Americans with Disabilities Act (ADA) sanctioned "fragrance-free" because of chemical allergies and we want to remind everyone to please refrain from wearing any scented/fragranced lotions, hair products, deodorant, sprays, etc. Failure to follow these guidelines could cause individual illness and could result in legal action against persons who did not follow these guidelines.

THE DESIGN AND IDEAS INCORPORATED HEREIN, AS AN INSTRUMENT OF PROFESSIONAL SERVICE IS PROPERTY OF SYCAMORE ENGINEERING, INC. DIMENSIONS SHOULD NOT BE OBTAINED BY USING SCALING OF THE PLAN. DIMENSIONS CAN BE OBTAINED BY CONTACTING SYCAMORE ENGINEERING, INC. DIRECTLY. © 2010
THIS PLAN IS NOT TO BE USED OR COPIED FOR ANY OTHER PROJECT WITHOUT WRITTEN AUTHORIZATION FROM SYCAMORE ENGINEERING, INC.

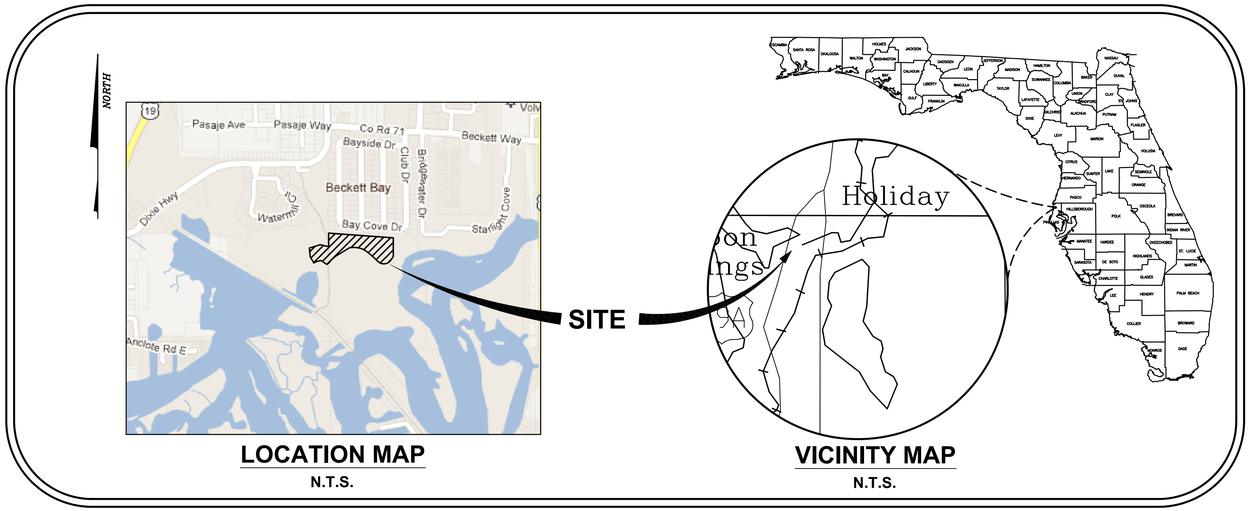

LOCATION MAP
N.T.S.

VICINITY MAP
N.T.S.

SECTION 1, TOWNSHIP 27 S, RANGE 15 E
SECTION 6, TOWNSHIP 27 S, RANGE 16 E

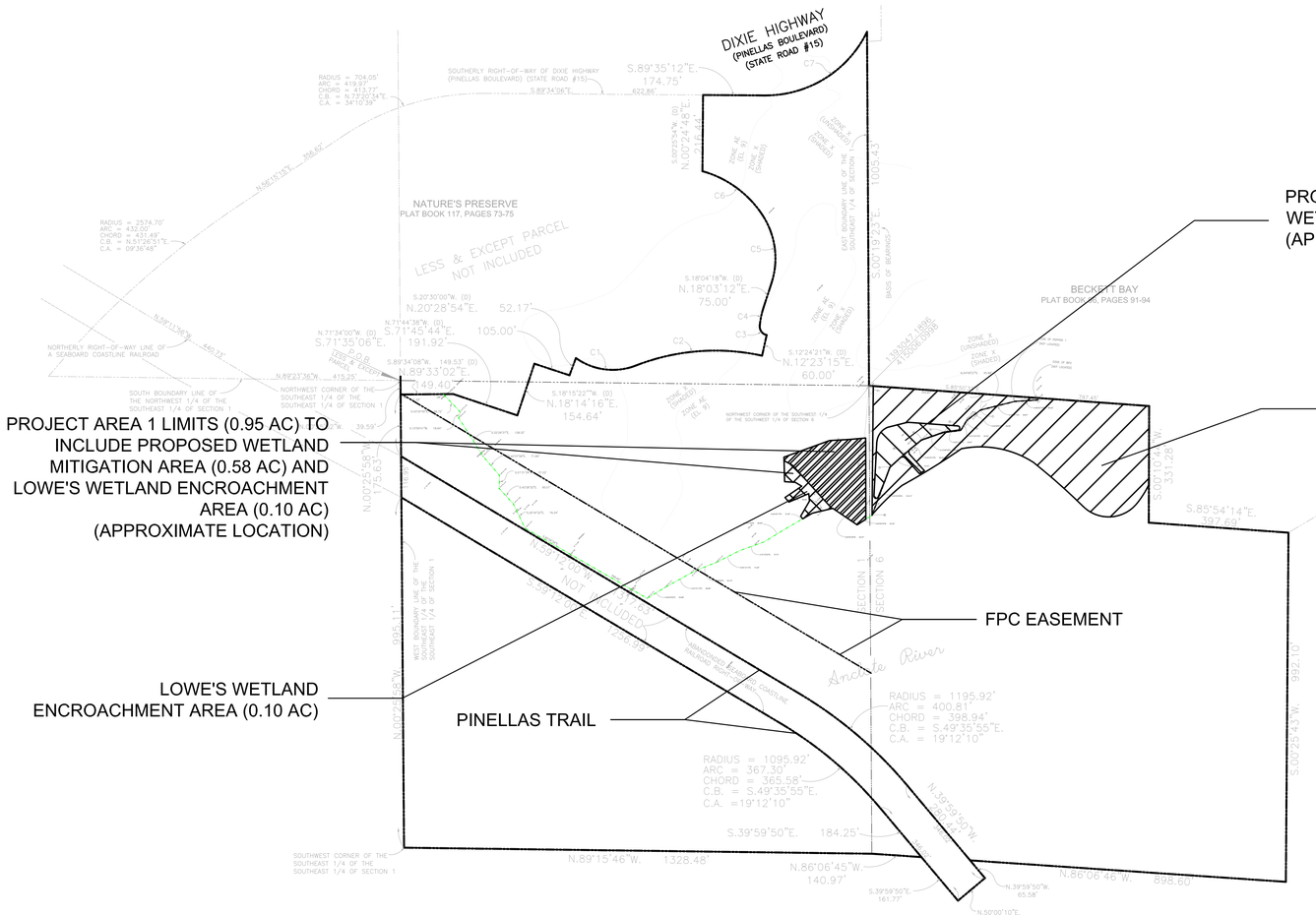

CONTRACTOR SHALL CONTACT SUNSHINE STATE ONE-CALL OF FLORIDA, INC. 1-800-432-4770 FOR LOCATION OF ALL UTILITIES, AT LEAST 72 HOURS PRIOR TO BEGINNING CONSTRUCTION.

J.D. ALSABBAGH, P.E.
FL P.E. #58995

Activity	Name	Date
Designed by:	ALC	02/10
Drawn by:	ALC	02/10
Checked by:	JDA	02/10
Approved by:	JDA	02/10

Certificate of Authorization No. 9485

No.	Date	Revision - Description
1		
2		
3		
4		

Scale:
Start Date: FEB., 2010
Job No. B0504
File:

SYCAMORE ENGINEERING, INC.
• Civil Engineering
• Land Planning
• Construction Management
• Landscape Architecture
SYCAMORE ENGINEERING, INC.
8379 W. Hillsborough Ave., Tampa, FL 33615
Phone: 813.889.0700
Fax: 813.889.0788
email: gene@sycamoreeng.com

COPYRIGHT © 2010

THE SHOPPES AT MERES
MERES BLVD & S. PINELLAS AVE.
TARPON SPRINGS, FLORIDA

PROPOSED WETLAND IMPROVEMENTS LOCATION MAP

Sheet No.
M-1

THE DESIGN AND IDEAS INCORPORATED HEREIN, AS AN INSTRUMENT OF PROFESSIONAL SERVICE IS PROPERTY OF SYCAMORE ENGINEERING, INC. DIMENSIONS SHOULD NOT BE OBTAINED BY USING SCALING OF THE PLAN. DIMENSIONS CAN BE OBTAINED BY CONTACTING SYCAMORE ENGINEERING, INC. DIRECTLY. © 2010
IT WITHOUT WRITTEN AUTHORIZATION FROM SYCAMORE ENGINEERING, INC. IT CAN NOT BE USED OR COPIED FOR ANY OTHER PROJECT

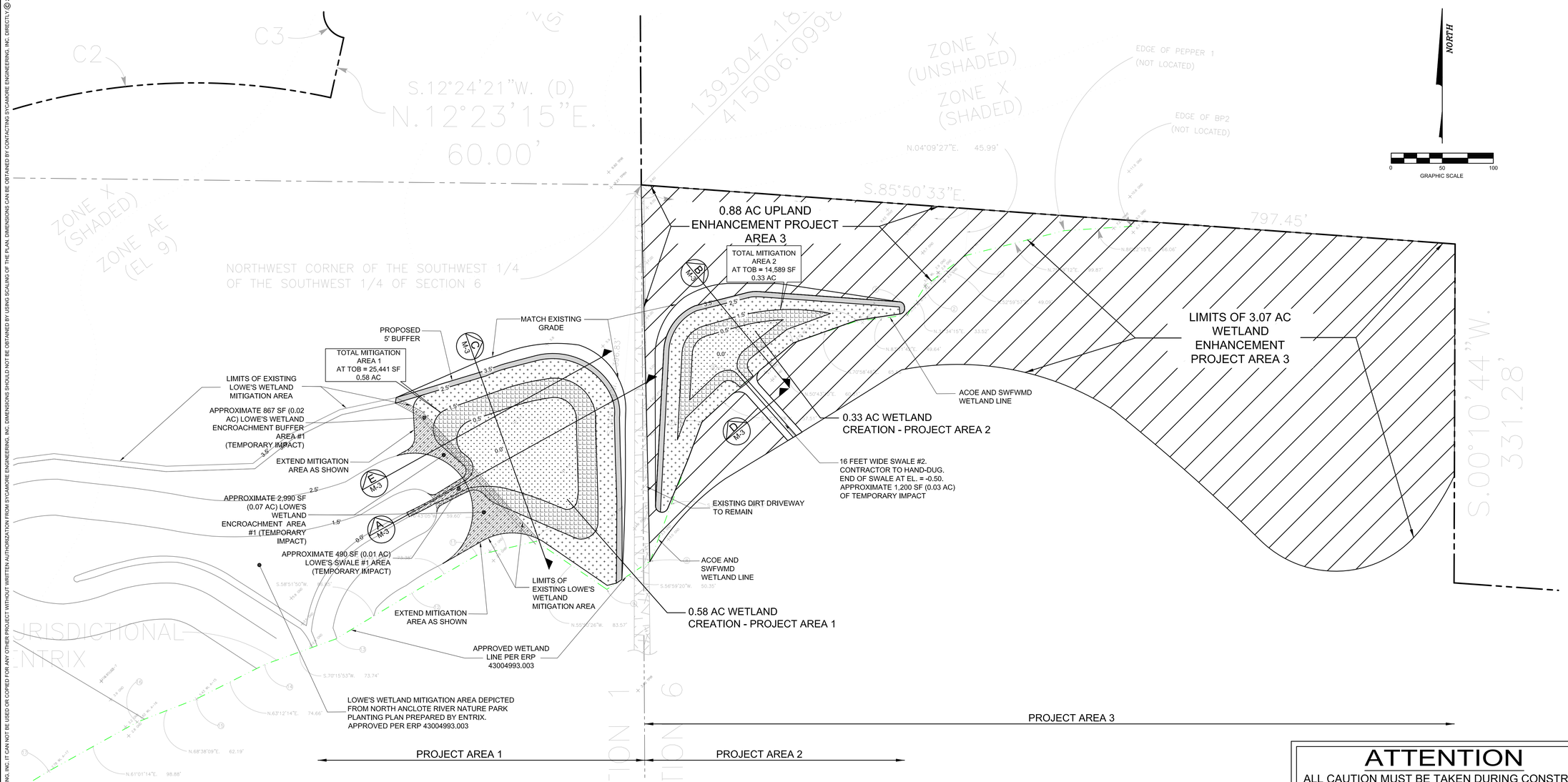

PROPOSED LEGEND

- WETLAND LINE
- WETLAND LINE
- PROJECT AREA LIMITS

- BUFFER PLANTING ZONE 1 (0.05 AC). SEE SHEET M-3 FOR DETAILS
- WETLAND CREATION 1A PLANTING ZONE (0.27 AC). SEE SHEET M-3 FOR DETAILS
- WETLAND CREATION 1B PLANTING ZONE (0.19 AC). SEE SHEET M-3 FOR DETAILS
- LOW MARSH 1C PLANTING ZONE (0.22 AC). SEE SHEET M-3 FOR DETAILS
- LOWE'S WETLAND ENCROACHMENT AREA (0.10 AC)

- BUFFER PLANTING ZONE 2 (0.05 AC). SEE SHEET M-3 FOR DETAILS
- WETLAND CREATION 2A PLANTING ZONE (0.19 AC). SEE SHEET M-3 FOR DETAILS
- WETLAND CREATION 2B PLANTING ZONE (0.08 AC). SEE SHEET M-3 FOR DETAILS
- LOW MARSH 2C PLANTING ZONE (0.06 AC).SEE SHEET M-3 FOR DETAILS

- WETLAND AND UPLAND ENHANCEMENT PROJECT AREA 3

0.27 AC WETLAND CREATION 1A
+ 0.19 AC WETLAND CREATION 1B
+ 0.22 AC LOW MARSH 1C
(*) - 0.10 AC EXISTING LOWE'S MITIGATION AREA =
0.58 AC TOTAL MITIGATION AREA 1

(*) EXISTING LOWE'S MITIGATION AREA DEPICTED FROM APPROVED ERP PERMIT# 43004993.003

0.19 WETLAND CREATION 2A
+ 0.08 WETLAND CREATION 2B
+ 0.06 LOW MARSH 2C =
0.33 AC TOTAL MITIGATION AREA 2

3.07 AC WETLAND ENHANCEMENT AREA 3
+ 0.88 AC UPLAND ENHANCEMENT AREA 3 =
3.95 AC TOTAL ENHANCEMENT AREA 3

ATTENTION

ALL CAUTION MUST BE TAKEN DURING CONSTRUCTION OF THE WETLAND CREATION AREA WITH MINIMAL DISRUPTION TO THE ADJACENT LAND. CONTRACTOR TO CONDUCT WORK USING LIGHT EQUIPMENTS IN SHORT TIME . WORK MUST BE CONDUCTED WITH THE ATTENDANCE OF THE PROJECT ENVIRONMENTAL CONSULTANT

NOTES:
1. SEE SHEET M-3 FOR PLANTING NOTES.
2. ALL VEGETATION WITHIN THE MITIGATION AREA WILL BE REMOVED DURING SITE PREPARATION AND DISPOSED OFF OF THE NORTH ANCLOTE RIVER PARK PROPERTY.
3. SEE SHEET M-4 FOR PROPOSED EROSION CONTROL PLAN.

CONTRACTOR SHALL CONTACT SUNSHINE STATE ONE-CALL OF FLORIDA, INC. 1-800-432-4770 FOR LOCATION OF ALL UTILITIES, AT LEAST 72 HOURS PRIOR TO BEGINNING CONSTRUCTION.

J.D. ALSABBAGH, P.E.
FL P.E. #58995

No.	Revision - Description	Date
1		
2		
3		
4		
5		

Activity	Name	Date
Designed by:	ALC	02/10
Drawn by:	ALC	02/10
Checked by:	JDA	02/10
Approved by:	JDA	02/10

Certificate of Authorization No. 9485

Scale: 1" = 50'
Start Date: FEB., 2010
Job No. B0504
File: MITIGATION

SYCAMORE ENGINEERING, INC.
COPYRIGHT © 2010

• Civil Engineering • Land Planning • Construction Management • Landscape Architecture

SYCAMORE ENGINEERING, INC.
8370 W. Hillsborough Ave., Suite 205
Tampa, FL 33615
Phone: 813.889.0700
Fax: 813.889.0788
email: jsalsabbagh@sycamoreeng.com

Phone: 813.889.0700
Fax: 813.889.0788

THE SHOPPES AT MERES
MERES BLVD & S. PINELLAS AVE.
TARPON SPRINGS, FLORIDA

WETLAND CREATION AREA 1 & 2 AND ENHANCEMENT AREA 3

Sheet No.

M-2

THE DESIGN AND IDEAS INCORPORATED HEREIN, AS AN INSTRUMENT OF PROFESSIONAL SERVICE IS PROPERTY OF SYCAMORE ENGINEERING, INC. DIMENSIONS SHOULD NOT BE OBTAINED BY USING SCALING OF THE PLAN. DIMENSIONS CAN BE OBTAINED BY CONTACTING SYCAMORE ENGINEERING, INC. DIRECTLY © 2010
THIS PROJECT WITHOUT WRITTEN AUTHORIZATION FROM SYCAMORE ENGINEERING, INC. DIMENSIONS SHOULD NOT BE OBTAINED BY USING SCALING OF THE PLAN. DIMENSIONS CAN BE OBTAINED BY CONTACTING SYCAMORE ENGINEERING, INC. DIRECTLY © 2010

WETLAND MITIGATION AREA 1

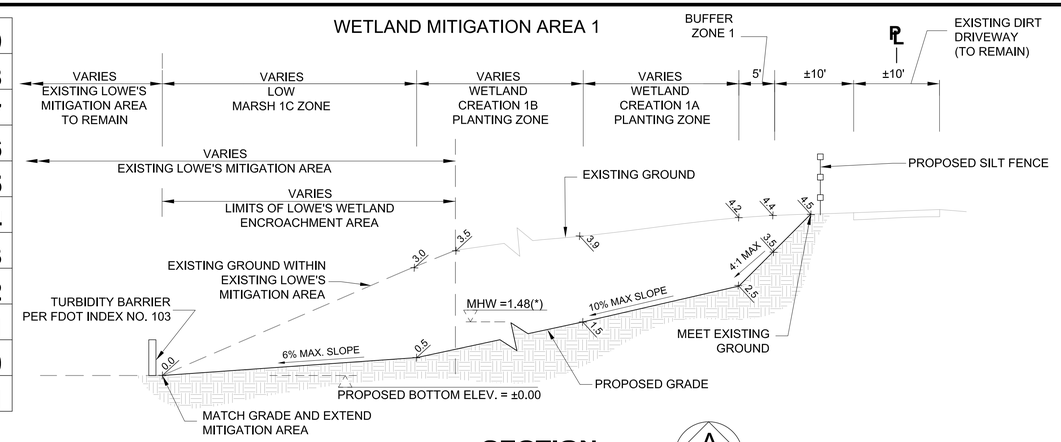

SECTION A M-3
SCALE: HORIZ. 1"=10'
VERT. 1"=2'

WETLAND MITIGATION AREA 2

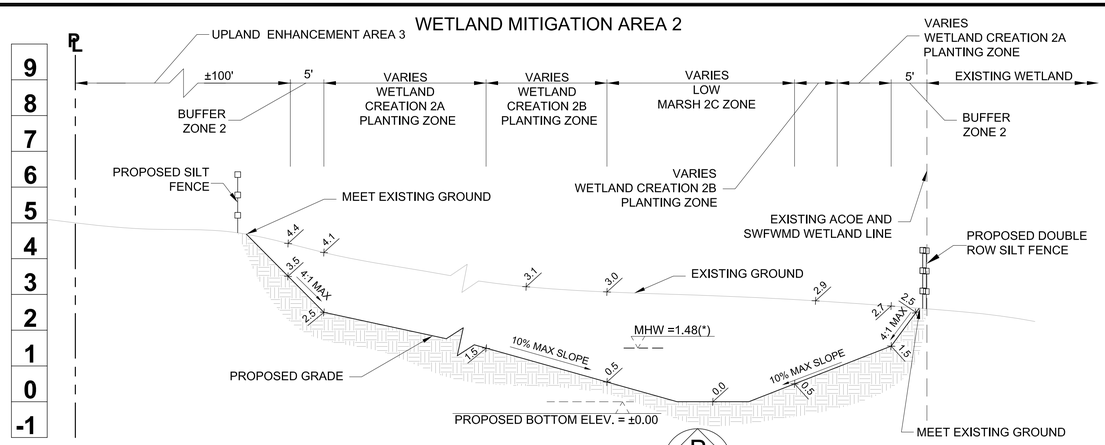

SECTION B M-3
SCALE: HORIZ. 1"=10'
VERT. 1"=2'

WETLAND MITIGATION AREA 1

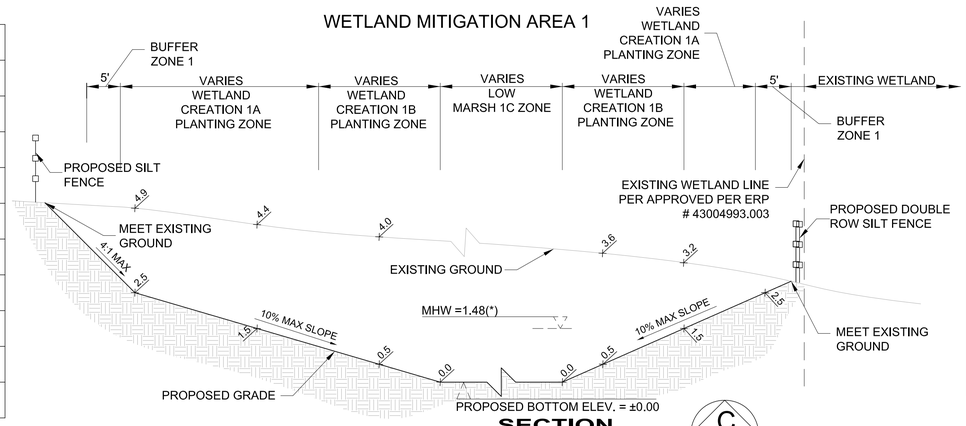

SECTION C M-3
SCALE: HORIZ. 1"=10'
VERT. 1"=2'

WETLAND MITIGATION AREA 1

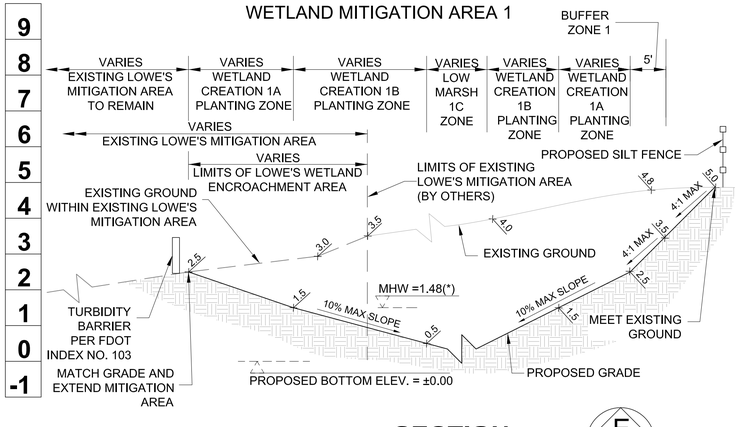

SECTION E M-3
SCALE: HORIZ. 1"=10'
VERT. 1"=2'

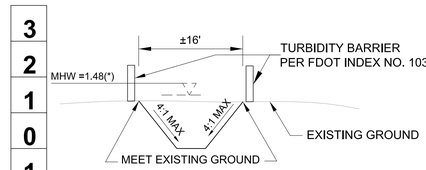

SECTION D M-3
SCALE: HORIZ. 1"=10'
VERT. 1"=2'

MITIGATION AREA 1 & LOWE'S WETLAND ENCROACHMENT AREA PLANTING TABLE

ZONE (ELEV.)	COMMON NAME	MITIGATION AREA	QUANTITIES MITIGATION AREA 1	ENCROACH. AREA	QUANTITIES ENCROACH. AREA 1	SCIENTIFIC NAME	SPACING	SIZE
LOW MARSH 1C (0.0' - 0.5')	smooth cordgrass	0.21 AC	500	0.01 AC	25	*Spartina alterniflora*	3' O.C.	4"
	black rush		500		25	*Juncus roemerianus*	3' O.C.	4"
WETLAND CREATION 1B (0.5' - 1.0')	joint paspalum	0.16 AC	400	0.03 AC (*)	100	*Paspalum disticum*	3' O.C.	4"
	seashore drop seed		200		50	*Sporobolus virginicus*	3' O.C.	4"
	black mangrove		4		1	*Avicennia germinans*	10' O.C.	3 GAL
	redmangrove		6		2	*Rhizophoria mangle*	10' O.C.	3 GAL
WETLAND CREATION 1A (1.0' - 2.5')	saltmarsh cordgrass	0.21 AC	900	0.06 AC (*)	200	*Spartina alterniflora*	3' O.C.	4"
	saltgrass		325		100	*Distichis spicata*	3' O.C.	4"
BUFFER 1 (2.5' - 3.5')	florida sunflower	0.05 AC	30	N/A	-	*Helianthus floridanus*	3' O.C.	4"
	sand cordgrass		200		-	*Spartina bakeri*	3' O.C.	4"
	marshhay cordgrass		10		-	*Spartina patens*	3' O.C.	4"
	beautyberry		12		-	*Callicarpa americana*	10' O.C.	3 GAL
	slash pine		12		-	*Pinus elliottii*	10' O.C.	3 GAL
	florida privet		12		-	*Forestiera segregata*	10' O.C.	3 GAL

(*) INCLUDES 0.01 AC OF THE LOWE'S ENCROACHMENT BUFFER AREA #1

MITIGATION AREA 2 PLANTING TABLE

ZONE (ELEV.)	COMMON NAME	ZONE AREA	QUANTITIES AREA 1	SCIENTIFIC NAME	SPACING	SIZE
LOW MARSH 2C (0.0' - 0.5')	smooth cordgrass	0.06 AC	150	*Spartina alterniflora*	3' O.C.	4"
	black rush		150	*Juncus roemerianus*	3' O.C.	4"
WETLAND CREATION 2B (0.5' - 1.0')	joint paspalum	0.19 AC	600	*Paspalum disticum*	3' O.C.	4"
	seashore drop seed		300	*Sporobolus virginicus*	3' O.C.	4"
	black mangrove		5	*Avicennia germinans*	10' O.C.	3 GAL
	redmangrove		7	*Rhizophoria mangle*	10' O.C.	3 GAL
WETLAND CREATION 2A (1.0' - 2.5')	saltmarsh cordgrass	0.08 AC	700	*Spartina alterniflora*	3' O.C.	4"
	saltgrass		200	*Distichis spicata*	3' O.C.	4"
BUFFER 2 (2.5' - 3.5')	florida sunflower	0.05 AC	40	*Helianthus floridanus*	3' O.C.	4"
	sand cordgrass		150	*Spartina bakeri*	3' O.C.	4"
	marshhay cordgrass		100	*Spartina patens*	3' O.C.	4"
	beautyberry		10	*Callicarpa americana*	10' O.C.	3 GAL
	slash pine		10	*Pinus elliottii*	10' O.C.	3 GAL
	florida privet		10	*Forestiera segregata*	10' O.C.	3 GAL

(*) MEAN HIGH WATER LEVEL DEPICTED FROM APPROVED ERP PERMIT# 43004993.003

WETLAND ENHANCEMENT AREA 3 (1.57 AC) PLANTING TABLE (**)

QUANTITIES	COMMON NAME	SCIENTIFIC NAME	SPACING	SIZE
85	swamp bay	*Persea palustris*	20' O.C.	3 GAL
86	sweetbay	*Magnolia virginiana*	20' O.C.	3 GAL
40	sweetgum	*Liquidambar styraciflua*	20' O.C.	3 GAL
85	buttombush	*Cephalanthus occidentalis*	20' O.C.	3 GAL
85	virginia willow	*Itea virginica*	20' O.C.	3 GAL
1,700	swamp fern	*Blechnum serrulatum*	3' O.C.	1 GAL

(*) PLANTS INSTALLED IN GAPS CREATED BY REMOVAL OF EXOTIC, APPROXIMATE 1,57 AC

UPLAND ENHANCEMENT AREA 3 (0.88 AC) PLANTING TABLE

QUANTITIES	COMMON NAME	SCIENTIFIC NAME	SPACING	SIZE
45	slash pine	*Pinus elliottii*	20' O.C.	3 GAL
50	live oak	*Quercus virginiana*	20' O.C.	3 GAL
100	beauty berry	*Callicarpa*	20' O.C.	1 GAL
1,533	sand cordgrass	*Spartina bakeri*	5' O.C.	4"

PLANTING NOTES

A) A WETLAND MITIGATION COMPLETION REPORT, TO INCLUDE AS-BUILT SURVEYS AND PLANTING DETAILS OF THE MITIGATION AREA(S), SHALL BE SUBMITTED TO THE SWFWMD AND EPC WITHIN 30 DAYS OF COMPLETING CONSTRUCTION AND PLANTING OF THE WETLAND MITIGATION AREA(S). THE AS-BUILT SURVEY MUST INCLUDE REPRESENTATIVE ELEVATIONS OF THE BOTTOM AND SLOPES. A CONTOUR LINE WITHIN 0.1' OF THE UPPER DESIGN ELEVATION (TYPICALLY SHW) SHALL BE DEPICTED ON THE SURVEY. USING THE POLYGON FORMED BY THE UPPER ELEVATION CONTOUR, CALCULATE AND REPORT THE AS-BUILT ACREAGE OF THE MITIGATION AREA(S) ON THE SURVEY. UPON SWFWMD INSPECTION AND APPROVAL OF THE MITIGATION AREA(S), THE MONITORING PROGRAM SHALL BE INITIATED.

B) SEMI-ANNUAL MONITORING ALONG WITH ASSOCIATED MONITORING REPORTS AND MAINTENANCE IS REQUIRED FOR A MINIMUM OF THREE YEARS FOR HERBACEOUS/SHRUB SYSTEMS AND FIVE YEARS IF THE SYSTEM IS FORESTED. MONITORING REPORTS MUST BE SUBMITTED TO SWFWMD AND EPC WITHIN 30 DAYS FOLLOWING EACH MONITORING EVENT. AT A MINIMUM, MONITORING REPORTS SHOULD ADDRESS:

1. DATE PLANTED AND NUMBER OF PLANTED MATERIALS USED
2. SOIL STABILIZATION MEASURES USED
3. PERCENT SURVIVAL OF PLANTED SPECIES
4. NUMBER OF PLANTS REPLANTED, IF NECESSARY, AND WHEN PLANTED
5. 20-25% OF TREES TAGGED TO MONITOR TREE GROWTH RATE AND DBH (FORESTED SYSTEMS)
6. WATER QUALITY
   a. VISUAL OBSERVATIONS
   b. LAB DATE IF NECESSARY, I.E. SALINITY, CONDUCTIVITY, PH, ETC.
7. DESIRABLE WETLAND SPECIES COVER
8. PLANT DIVERSIFICATION AND NATURAL RECRUITMENT (LIST SPECIES PRESENT)
9. DEPTH OF WATER AT MONITORING EVENT
10. PERMANENTLY MARKED PHOTO STATIONS
11. WILDLIFE USAGE
12. OVERALL ECOLOGICAL EVALUATION
13. PROBLEMS ENCOUNTERED AND CORRECTIVE ACTIONS IMPLEMENTED OR NEEDED

A) MAINTENANCE SHALL MEAN THE REMOVAL OF NUISANCE OR EXOTIC SPECIES. NUISANCE SPECIES COVERAGE MUST NOT EXCEED 10%. (CATTAILS, TYPHA SPP; WILLOWS, SALIX SPP, PRIMROSE WILLOW, LUDWIGIA PERUVIANA, DOGFENNAL, EUPATORIUM SPP; SESBANIA SPP; WATER HYACINTHS, EICHORNIA SPP. ARE EXAMPLES, BUT NOT THE COMPREHENSIVE LIST OF NUISANCE SPECIES),
B) EIGHTY-FIVE PERCENT (85%) SURVIVAL MUST BE GUARANTEED FOR EACH PLANTED TREE AND SHRUB SPECIES. 50% COVER WITH DESIRABLE NATIVE WETLAND SPECIES MUST BE ACHIEVED AT THE END OF YEAR 1, 70% AT YEAR 2 AND 85% PRIOR TO RELEASE. ANNUAL REPLANTING IS REQUIRED IF THESE CRITERIA ARE NOT MET.
C) A TIMETABLE FOR THE START AND COMPLETION OF THE MITIGATION WORK MUST BE INCLUDED.
D) INDICATE PLANT SOURCE (I.E. CERTIFIED NURSERY GROWN, BARE ROOT, TRANSPLANTED FROM ON SITE). IF COLLECTED PLANTS ARE TO BE USED, DONOR SITES MUST BE IDENTIFIED AND APPROVED BY THE EPC.
E) IF THE MITIGATION ACREAGE, CUMULATIVELY, IS GREATER THAN OR EQUAL TO 0.5 ACRES, A CONSERVATION EASEMENT MUST BE PLACED OVER THE MITIGATION AREA(S).

CLEARING AND PREPARATION NOTES:

1. PRIOR TO ANY SITE CLEARING, ALL TREES SHOWN TO REMAIN AS INDICATED ON THE PLANS SHALL BE PROTECTED IN ACCORDANCE WITH CITY OF TARPON SPRINGS TREE ORDINANCES AND DETAILS CONTAINED IN THESE PLANS. IT SHALL BE THE CONTRACTOR'S RESPONSIBILITY TO MAINTAIN THESE TREES IN GOOD CONDITION. NO TREE SHOWN TO REMAIN SHALL BE REMOVED WITHOUT APPROVAL FROM THE OWNER.
2. THE CONTRACTOR IS TO PREPARE THE SITE PRIOR TO BEGINNING ACTUAL CONSTRUCTION IN ACCORDANCE WITH THE PROJECT SOILS REPORT. COPIES OF THE SOILS REPORT ARE AVAILABLE THROUGH THE OWNER.
3. CONTRACTOR SHALL CLEAR AND GRUB ONLY THOSE PORTIONS OF THE SITE NECESSARY FOR CONSTRUCTION. DISTURBED AREAS WILL BE SEEDED, MULCHED, SODDED OR PLANTED WITH OTHER APPROVED LANDSCAPE MATERIAL WITHIN ONE WEEK FOLLOWING CONSTRUCTION.
4. THE TOP 4" TO 6" OF SOIL REMOVED DURING CLEARING AND GRUBBING SHALL BE STOCKPILED ON-SITE IN A LOCATION DESIGNATED BY THE DEVELOPER/OWNER TO BE USED FOR LANDSCAPING PURPOSES, UNLESS OTHERWISE DIRECTED BY DEVELOPER/OWNER. REMAINING EARTHWORK THAT RESULTS FROM CLEARING AND GRUBBING OR SITE EXCAVATION IS TO BE UTILIZED ON-SITE IF REQUIRED, PROVIDED THAT THE MATERIAL IS DEEMED SUITABLE FOR CONSTRUCTION BY THE GEOTECHNICAL CONSULTANT. EXCESS MATERIAL IS TO BE EITHER STOCKPILED ON THE SITE OR DISPOSED OF AS DIRECTED BY THE OWNER. CONTRACTOR IS RESPONSIBLE FOR ACQUIRING ANY PERMITS THAT ARE NECESSARY FOR REMOVING EXCESS EARTHWORK FROM THE SITE.
5. ALL CONSTRUCTION DEBRIS AND OTHER WASTE MATERIAL SHALL BE DISPOSED OF OFF-SITE IN ACCORDANCE WITH APPLICABLE REGULATORY AGENCY REQUIREMENTS.

ENHANCEMENT AREA 3

BOTH THE UPLANDS AND WETLANDS EAST OF THE ACCESS TRAIL WILL BE ENHANCED BY INSTALLING WETLAND AND UPLAND SPECIES. ALL EXOTICS WILL BE CHEMICALLY TREATED WITH AN APPROPRIATE HERBICIDE, IN PLACE. THE 3.07 ACRES EAST WETLANDS SECTION OF AREA 3 WILL BE LIMITED TO HAND SPRAYING ONLY DUE TO THE EXISTING WET CONDITIONS AND THEREFORE, ALL TREATMENTS WILL BE DONE IN PLACE. THE 0.88 ACRES NORTHWEST UPLAND SECTION OF AREA 3 WILL BE MECHANICALLY ALTERED AND REPLANTED WITH APPROPRIATE SPECIES. ALL TREES AND SHRUBS WILL BE PLANTED ON 20' CENTERS IN CANOPY GAPS AND ALONG THE SUNNY EDGES OF THE SITE.

ATTENTION

1. WETLAND CREATION BOTTOM MUST BE AT EL. = 0.0'. CONTRACTOR TO CONSTRUCT BOTTOM ACCORDINGLY.
2. PROPOSED WETLAND CREATION AREA TO BE HYDROLOGICALLY CONNECTED TO THE PROPOSED BLACKRUSH MARSH AREA THRU PROPOSED SWALE. SEE SHEET M-2 FOR DETAILS.
3. ALL CAUTION MUST BE TAKEN DURING CONSTRUCTION OF THE WETLAND CREATION AREA WITH MINIMAL DISRUPTION TO THE ADJACENT LAND. CONTRACTOR TO CONDUCT WORK USING LIGHT EQUIPMENTS AND IN A SHORT TIME . WORK MUST BE CONDUCTED WITH THE ATTENDANCE OF THE CITY OF TARPON SPRINGS STAFF AND THE PROJECT ENVIRONMENTAL CONSULTANT

CONTRACTOR SHALL CONTACT SUNSHINE STATE ONE-CALL OF FLORIDA, INC. 1-800-432-4770 FOR LOCATION OF ALL UTILITIES, AT LEAST 72 HOURS PRIOR TO BEGINNING CONSTRUCTION.

J.D. ALSABBAGH, P.E.
FL P.E. #58995

Scale: AS SHOWN
Start Date: FEB., 2010
Job No. B0504
File: CROSS SECTION
SYCAMORE ENGINEERING, INC.
COPYRIGHT © 2010

No.	Date	Revision - Description
1		
2		
3		

Activity	Name	Date
Designed by:	ALC	02/10
Drawn by:	ALC	02/10
Checked by:	JDA	02/10
Approved by:	JDA	02/10

Certificate of Authorization No. 9685

• Civil Engineering • Land Planning • Construction Management • Landscape Architecture
Phone: 813.889.0700 Fax: 813.889.0788
SYCAMORE ENGINEERING, INC.
8370 W. Hillsborough Ave., Suite 205 Tampa, FL 33615
Phone: 813.889.0700 Fax: 813.889.0788
email: general@sycamoreeng.com

THE SHOPPES AT MERES
MERES BLVD & S. PINELLAS AVE.
TARPON SPRINGS, FLORIDA

CROSS SECTION, PLANTING & CONSTRUCTION NOTES SHEET

Sheet No.
M-3

THE DESIGN AND IDEAS INCORPORATED HEREIN, AS AN INSTRUMENT OF PROFESSIONAL SERVICE IS PROPERTY OF SYCAMORE ENGINEERING, INC. DIMENSIONS SHOULD NOT BE OBTAINED BY USING SCALING OF THE PLAN. DIMENSIONS CAN BE OBTAINED BY CONTACTING SYCAMORE ENGINEERING, INC. DIRECTLY © 2010
IT CAN NOT BE USED OR COPIED FOR ANY OTHER PROJECT WITHOUT WRITTEN AUTHORIZATION FROM SYCAMORE ENGINEERING, INC.

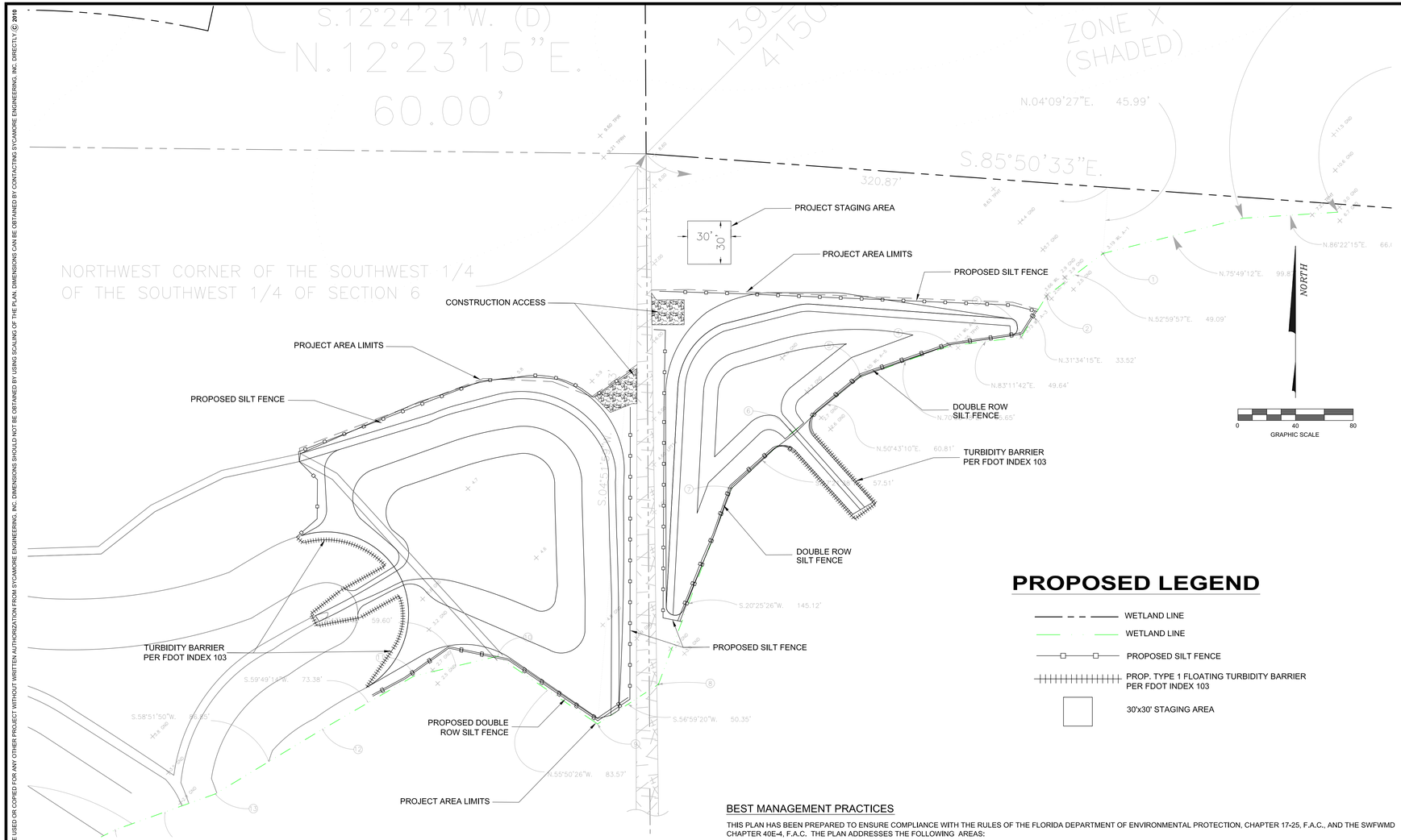

PROPOSED LEGEND

- WETLAND LINE
- WETLAND LINE
- PROPOSED SILT FENCE
- PROP. TYPE 1 FLOATING TURBIDITY BARRIER PER FDOT INDEX 103
- 30'x30' STAGING AREA

STABILIZED CONSTRUCTION ENTRANCE

1. STONE SIZE - USE 2" STONE, OR RECLAIMED OR RECYCLED CONCRETE EQUIVALENT
2. LENGTH - AS REQUIRED, BUT NOT LESS THAN 50 FEET
3. THICKNESS - NOT LESS THAN SIX (6) INCHES
4. WIDTH - TWELVE (12) FOOT MINIMUM, BUT NOT LESS THAN THE FULL WIDTH AT POINTS WHERE INGRESS OR EGRESS OCCURS
5. FILTER CLOTH - WILL BE PLACED OVER THE ENTIRE AREA PRIOR TO PLACING OF STONE
6. SURFACE WATER - ALL SURFACE WATER FLOWING OR DIVERTED TOWARD CONSTRUCTION ENTRANCES SHALL BE PIPED ACROSS THE ENTRANCE. IF PIPING IS IMPRACTICAL, A MOUNTABLE BERM WITH 5:I SLOPES WILL BE PERMITTED.
7. MAINTENANCE - THE ENTRANCE SHALL BE MAINTAINED IN A CONDITION WHICH WILL PREVENT TRUCK OR FLOWING OF SEDIMENT ONTO PUBLIC RIGHTS-OF-WAY. THIS MAY REQUIRE PERIODIC TOP DRESSING WITH ADDITIONAL STONE AS CONDITIONS DEMAND AND REPAIR AND/OR CLEANOUT ANY MEASURES USED TO TRAP SEDIMENT. ALL SEDIMENT SPILLED, DROPPED, WASHED, OR TRACKED ONTO PUBLIC RIGHTS-OF-WAY MUST BE REMOVED IMMEDIATELY.
8. WASHING - WHEELS SHALL BE CLEANED TO REMOVE SEDIMENT PRIOR TO ENTRANCE ONTO PUBLIC RIGHTS-OF-WAY. WHEN WASHING IS REQUIRED, IT SHALL BE DONE ON AN AREA STABILIZED WITH STONE AND WHICH DRAINS INTO AN APPROVED SEDIMENT TRAPPING DEVICE.
9. PERIODIC INSPECTION AND NEEDED MAINTENANCE SHALL BE PROVIDED AFTER EACH RAIN.

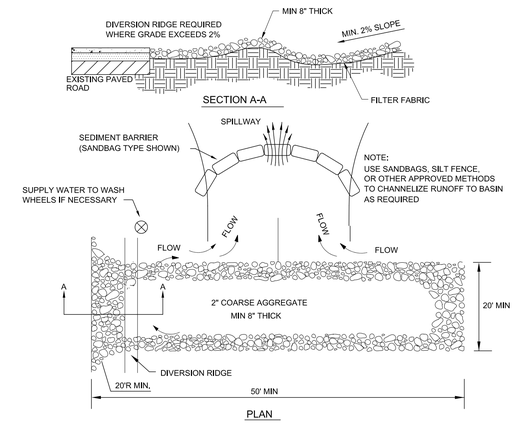

TEMPORARY CONSTRUCTION ACCESS DETAIL

N.T.S.



TYPE III SILT FENCE

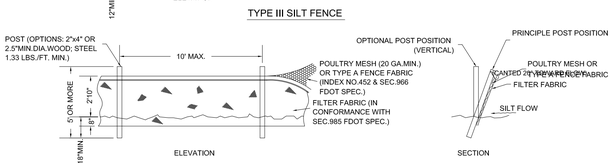

TYPE IV SILT FENCE

DO NOT DEPLOY IN A MANNER THAT SILT FENCES WILL ACT AS A DAM ACROSS PERMANENT FLOWING WATERCOURSES. SILT FENCES ARE TO BE USED AT UPLAND LOCATIONS AND TURBIDITY BARRIERS USED AT PERMANENT BODIES OF WATER.

NOTES:
-For additional information and details, see F.D.O.T. Index No.102.
-Unless specified, hay barriers may be used in lieu of silt fences.
-Additional posts and rails may be necessary to secure and support barriers.
-Additional fence lengths may be required by the County Engineer or by regulatory agencies.

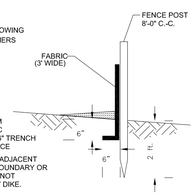

EROSION CONTROL DETAIL

N.T.S.

BEST MANAGEMENT PRACTICES

THIS PLAN HAS BEEN PREPARED TO ENSURE COMPLIANCE WITH THE RULES OF THE FLORIDA DEPARTMENT OF ENVIRONMENTAL PROTECTION, CHAPTER 17-25, F.A.C., AND THE SWFWMD CHAPTER 40E-4, F.A.C. THE PLAN ADDRESSES THE FOLLOWING AREAS:

1. PROTECTION OF PRESERVED/CONSERVED UPLAND HABITATS DURING CONSTRUCTION.
2. GENERAL EROSION CONTROL.
3. PROTECTION OF SURFACE WATER QUALITY DURING AND AFTER CONSTRUCTION.
4. CONTROL OF WIND EROSION.

THE VARIOUS TECHNIQUES OR ACTIONS IDENTIFIED UNDER EACH SECTION INDICATE THE APPROPRIATE SITUATION WHEN THE TECHNIQUES SHOULD BE EMPLOYED. ALSO IDENTIFIED IS A CROSS-REFERENCE TO A DIAGRAM OR FIGURE REPRESENTING THE TECHNIQUE.
EROSION AND SEDIMENTATION CONTROL DEVICES SHOULD BE INSPECTED AT LEAST ONCE PER WEEK AND/OR AFTER ANY STORM EVENT MEASURING A QUATER INCH OR MORE OF RAINFALL. IT SHOULD BE NOTED THAT THE MEASURES IDENTIFIED ON THIS PLAN ARE ONLY SUGGESTED BMP(S). THE CONTRACTOR SHALL PROVIDE POLLUTION PREVENTION AND EROSION CONTROL MEASURES AS SPECIFIED IN FDOT INDEXES #100 THROUGH #102 AND AS NECESSARY FOR EACH SPECIFIC APPLICATION.

SECTION 1 PROTECTION OF PRESERVED/CONSERVED UPLAND HABITATS
N/A

SECTION 2 GENERAL EROSION CONTROL
2.1 GENERAL EROSION CONTROL BMPS SHALL BE EMPLOYED TO MINIMIZE SOIL EROSION AND POTENTIAL LAKE SLOPE CAVE-INS. WHILE THE VARIOUSTECHNIQUES REQUIRED WILL BE SITE AND PLAN SPECIFIC, THEY SHOULD BE EMPLOYED PRIOR TO CONSTRUCTION ACTIVITIES.
2.2 CLEARED SITE DEVELOPMENT AREAS WHICH WILL REMAIN AT ROUGH GRADE FOR 14 DAYS OR MORE SHOULD BE STABILIZED IMMEDIATELY BY COVERING WITH ADEQUATE AMOUNTS OF HAY OR OVERSEEDED AND PERIODICALLY WATERED SUFFICIENT TO STABILIZE THE TEMPORARY GROUNDCOVER.
2.3 ALL GRASS SLOPES CONSTRUCTED STEEPER THAN 4H:1V SHALL BE SODDED IMMEDIATELY AFTER FINAL GRADE IS ESTABLISHED.
2.4 SOD SHALL BE PLACED FOR A 3-FOOT WIDE STRIP ADJOINING ALL CURBING AND AROUND ALL INLETS. SOD SHALL BE PLACED BEFORE SILT BARRIERS ARE INSTALLED.
2.5 WHERE REQUIRED TO PREVENT EROSION FROM SHEET FLOW ACROSS BAR GROUND FROM ENTERING A LAKE OR SWALE, A TEMPORARY SEDIMENT SUMP SHALL BE CONSTRUCTED. THE TEMPORARY SEDIMENT SUMP SHALL REMAIN IN PLACE UNTIL VEGETATION IS ESTABLISHED ON THE GROUND DRAINING TO THE SUMP.
2.6 UNLESS OTHERWISE SPECIFIED, ACCUMULATED SEDIMENTS SHOULD BE REMOVED BEFORE THEY REACH ONE-HALF OF THE CAPACITY OF THE CONTROL DEVICE.

SECTION 3 PROTECTION OF SURFACE WATER QUALITY DURING AND AFTER CONSTRUCTION
3.1 SURFACE WATER QUALITY SHALL BE MAINTAINED BY EMPLOYING THE FOLLOWING BMPS IN THE CONSTRUCTION PLANNING AND CONSTRUCTION OF ALL IMPROVEMENTS.
3.2 WHERE PRACTICAL, STORMWATER SHALL BE CONVEYED BY SWALES. SWALES SHALL BE CONSTRUCTED AS SHOWN ON PLANS.
3.3 EROSION CONTROL MEASURES SHALL BE EMPLOYED TO MINIMIZE TURBIDITY OF SURFACE WATERS LOCATED DOWNSTREAM OF ANY CONSTRUCTION ACTIVITY. WHILE THE VARIOUS MEASURES REQUIRED WILL BE SITE SPECIFIC, THEY SHALL BE EMPLOYED AS NEEDED IN ACCORDANCE WITH THE FOLLOWING:
A. IN GENERAL, EROSION SHALL BE CONTROLLED AT THE FURTHEST PRACTICAL UPSTREAM LOCATION.
B. STORMWATER INLETS SHALL BE PROTECTED DURING CONSTRUCTION. PROTECTION MEASURES SHALL BE EMPLOYED AS SOON AS PRACTICAL DURING THE VARIOUS STAGES OF INLET CONSTRUCTION. SILT BARRIERS SHALL REMAIN IN PLACE UNTIL SODDING AROUND INLETS IS COMPLETE.
3.4 HEAVY CONSTRUCTION EQUIPMENT PARKING AND MAINTENANCE AREAS SHALL BE DESIGNED TO PREVENT OIL, GREASE, AND LUBRICANTS FROM ENTERING SITE DRAINAGE FEATURES INCLUDING STORMWATER COLLECTION AND TREATMENT SYSTEMS. CONTRACTORS SHALL PROVIDE BROAD DIKES OR SILT SCREENS AROUND, AND SEDIMENT SUMPS WITHIN, SUCH AREAS AS REQUIRED TO CONTAIN SPILLS OF OIL, GREASE OR LUBRICANTS. CONTRACTORS SHALL HAVE AVAILABLE, AND SHALL USE, ABSORBENT FILTER PADS TO CLEAN UP SPILLS AS SOON AS POSSIBLE AFTER OCCURRENCE.
3.5 SILT BARRIERS, ANY SILT WHICH ACCUMULATES BEHIND THE BARRIERS, AND ANY FILL USED TO ANCHOR THE BARRIERS SHALL BE REMOVED PROMPTLY AFTER THE END OF THE MAINTENANCE PERIOD SPECIFIED FOR THE BARRIERS.

SECTION 4 CONTROL OF WIND EROSION
4.1 WIND EROSION SHALL BE CONTROLLED BY EMPLOYING THE FOLLOWING METHODS AS NECESSARY AND APPROPRIATE:
A. BARE EARTH AREAS SHALL BE WATERED DURING CONSTRUCTION AS NECESSARY TO MINIMIZE THE TRANSPORT OF FUGITIVE DUST. IT MAY BE NECESSARY TO LIMIT CONSTRUCTION VEHICLE SPEED IF BARE EARTH HAS NOT BEEN EFFECTIVELY WATERED. IN NO CASE SHALL FUGITIVE DUST BE ALLOWED TO LEAVE THE SITE UNDER CONSTRUCTION.
B. AS SOON AS PRACTICAL AFTER COMPLETION OF CONSTRUCTION, BARE EARTH AREAS SHALL BE VEGETATED.
C. AT ANY TIME BOTH DURING AND AFTER SITE CONSTRUCTION THAT WATERING AND/OR VEGETATION ARE NOT EFFECTIVE IN CONTROLLING WIND EROSION AND/OR TRANSPORT OF FUGITIVE DUST, OTHER METHODS AS ARE NECESSARY FOR SUCH CONTROL SHALL BE EMPLOYED. THESE METHODS MAY INCLUDE ERECTION OF DUST CONTROL FENCES. IF REQUIRED, DUST CONTROL FENCES SHALL BE CONSTRUCTED IN ACCORDANCE WITH THE DETAIL FOR A SILT FENCE EXCEPT. THE MINIMUM HEIGHT SHALL BE 4 FEET.

ATTENTION:

CONTRACTOR IS REQUIRED TO MAINTAIN ALL SILT FENCES AND TURBIDITY BARRIERS IN GOOD REPAIR AT ALL TIMES. NO WORK SHALL BE PERFORMED OUTSIDE OF THESE BARRIERS AT ANY TIME.

CONTRACTOR SHALL CONTACT SUNSHINE STATE ONE-CALL OF FLORIDA, INC. 1-800-432-4770 FOR LOCATION OF ALL UTILITIES, AT LEAST 72 HOURS PRIOR TO BEGINNING CONSTRUCTION.

J.D. ALSABBAGH, P.E.
FL P.E. #58995

Scale: 1" = 40'
Start Date: FEB., 2010
Job No. B0504
File: CROSS SECTION
SYCAMORE ENGINEERING, INC.
COPYRIGHT © 2010

No.	Revision - Description	Date
1		
2		
3		
4		

Activity	Name	Date
Designed by:	ALC	02/10
Drawn by:	ALC	02/10
Checked by:	JDA	02/10
Approved by:	JDA	02/10

Certificate of Authorization No. 9685

• Civil Engineering • Land Planning • Construction Management • Landscape Architecture
SYCAMORE ENGINEERING, INC.
8370 W. Hillsborough Ave., Suite 205
Tampa, FL 33615
Phone: 813.889.0700
Fax: 813.888.0788
email: jalsabbagh@sycamoreeng.com

THE SHOPPES AT MERES
MERES BLVD & S. PINELLAS AVE.
TARPON SPRINGS, FLORIDA

EROSION CONTROL PLAN, NOTES & DETAIL

Sheet No.
M-4



7th SEMI-ANNUAL or FINAL MONITORING REPORT FOR THE THE SHOPPES @ MERES BLVD. OFF SITE MITIGATION PROJECT

13 August 2025

By

Donald Richardson, Ph.D.
Ecological Consultants, Inc.
7301 Summerbridge Drive
Tampa, Florida 33634

INTRODUCTION

The Shops of Meres project is located in a tidal canal system extending from the Anclote River's Whitcomb Bayou, at the northwest quadrant of the intersection of U.S. Alternate Highway 19 and Meres Boulevard in the City of Tarpon Springs, Pinellas County, Florida (TRS:27/15/13).

The project includes the construction of a retail project with a drive-thru component and requires impacts to 0.99 acre of tidal wetlands (including 0.34 acre of low salt marsh, 0.32-acre mangroves, and 0.33-acre mangrove/Brazilian pepper mix). The City of Tarpon Springs requires that some portion of the mitigation for these impacts be constructed within the city limits.

Wetland mitigation for the permanent filling of 0.99 acres of saltmarsh/mangrove habitat will be provided by off site creation of two mitigation areas, upland buffer and wetland enhancement in the North Anclote River Park. Mitigation area #1 is about 0.58 acres and will be constructed on the west side of the park access trail and is hydraulically connected to the Lowe's mitigation area to the west. Mitigation area #2 provides 0.33 acres of wetland creation on the east side of the park access trail and this is hydraulically connected to the Anclote River black rush marsh and the created upland enhancement area (0.88 acres) to the north. Additionally, 3.07 acres of existing mixed hardwood swamp located east of mitigation area #2 will be enhanced by removing exotics species. Signage will be installed along the north side of the wetland enhancement area to curtail dumping of domestic debris. A temporary irrigation system was installed in the upland enhancement area to provide sufficient soil moisture during the winter drought season.

Each of the four sites were planted in December 2014 and again in February 2015 (Tables 1-4) to replace planting units that died due to droughty soils.

WETLAND ENHANCEMENT AREA 3 (1.57 AC) PLANTING TABLE (**)				
QUANTITIES	COMMON NAME	SCIENTIFIC NAME	SPACING	SIZE
85	swamp bay	*Persea palustris*	20' O.C.	3 GAL
86	sweetbay	*Magnolia virginiana*	20' O.C.	3 GAL
40	sweetgum	*Liquidambar styraciflua*	20' O.C.	3 GAL
85	buttonbush	*Cephalanthus occidentalis*	20' O.C.	3 GAL
85	Virginia willow	*Itea virginica*	20' O.C.	3 GAL
1,700	swamp fern	*Blechnum serrulatum*	3' O.C.	1 GAL

(*) PLANTS INSTALLED IN GAPS CREATED BY REMOVAL OF EXOTIC. APPROXIMATE 1.57 AC

Table 2

UPLAND ENHANCEMENT AREA 3 (0.88 AC) PLANTING TABLE				
QUANTITIES	COMMON NAME	SCIENTIFIC NAME	SPACING	SIZE
45	slash pine	*Pinus elliottii*	20' O.C.	3 GAL
50	live oak	*Quercus virginiana*	20' O.C.	3 GAL
100	beauty berry	*Callicarpa*	20' O.C.	1 GAL
1,533	sand cordgrass	*Spartina bakeri*	5' O.C.	4"

Table 3

MITIGATION AREA 1 & LOWE'S WETLAND ENCROACHMENT AREA PLANTING TABLE								
ZONE (ELEV.)	COMMON NAME	MITIGATION AREA	QUANTITIES MITIGATION AREA 1	ENCROACH. AREA	QUANTITIES ENCROACH. AREA 1	SCIENTIFIC NAME	SPACING	SIZE
LOW MARSH 1C (0.0' - 0.5')	smooth cordgrass	0.21 AC	500	0.01 AC	25	*Spartina alterniflora*	3' O.C.	4"
	black rush		500		25	*Juncus roemerianus*	3' O.C.	4"
WETLAND CREATION 1B (0.5' - 1.0')	joint paspalum	0.16 AC	400	0.03 AC (*)	100	*Paspalum disticum*	3' O.C.	4"
	seashore drop seed		200		50	*Sporobolus virginicus*	3' O.C.	4"
	black mangrove		4		1	*Avicennia germinans*	10' O.C.	3 GAL
	redmangrove		6		2	*Rhizophoria mangle*	10' O.C.	3 GAL
WETLAND CREATION 1A (1.0' - 2.5')	saltmarsh cordgrass	0.21 AC	900	0.06 AC (*)	200	*Spartina altemiflora*	3' O.C.	4"
	saltgrass		325		100	*Distichis spicata*	3' O.C.	4"
BUFFER 1 (2.5' - 3.5')	florida sunflower	0.05 AC	30	N/A	-	*Helianthus floridanus*	3' O.C.	4"
	sand cordgrass		200		-	*Spartina bakeri*	3' O.C.	4"
	marshhay cordgrass		10		-	*Spartina patens*	3' O.C.	4"
	beautyberry		12		-	*Callicarpa americana*	10' O.C.	3 GAL
	slash pine		12		-	*Pinus elliottii*	10' O.C.	3 GAL
	florida privet		12		-	*Forestiera segregata*	10' O.C.	3 GAL

(*) INCLUDES 0.01 AC OF THE LOWE'S ENCROACHMENT BUFFER AREA #1

Table 4

MITIGATION AREA 2 PLANTING TABLE						
ZONE (ELEV.)	COMMON NAME	ZONE AREA	QUANTITIES AREA 1	SCIENTIFIC NAME	SPACING	SIZE
LOW MARSH 2C (0.0' - 0.5')	smooth cordgrass	0.06 AC	150	*Spartina alterniflora*	3' O.C.	4"
	black rush		150	*Juncus roemerianus*	3' O.C.	4"
WETLAND CREATION 2B (0.5' - 1.0')	joint paspalum	0.19 AC	600	*Paspalum disticum*	3' O.C.	4"
	seashore drop seed		300	*Sporobolus virginicus*	3' O.C.	4"
	black mangrove		5	*Avicennia germinans*	10' O.C.	3 GAL
	redmangrove		7	*Rhizophoria mangle*	10' O.C.	3 GAL
WETLAND CREATION 2A (1.0' - 2.5')	saltmarsh cordgrass	0.08 AC	700	*Spartina altemiflora*	3' O.C.	4"
	saltgrass		200	*Distichis spicata*	3' O.C.	4"
BUFFER 2 (2.5' - 3.5')	florida sunflower	0.05 AC	40	*Helianthus floridanus*	3' O.C.	4"
	sand cordgrass		150	*Spartina bakeri*	3' O.C.	4"
	marshhay cordgrass		100	*Spartina patens*	3' O.C.	4"
	beautyberry		10	*Callicarpa americana*	10' O.C.	3 GAL
	slash pine		10	*Pinus elliottii*	10' O.C.	3 GAL
	florida privet		10	*Forestiera segregata*	10' O.C.	3 GAL

A wetland mitigation completion report, to include As Built and planting details of the mitigation area shall be submitted to the SWFWMD and ACOE within 30 days of completing construction and planting of the mitigation area. The As-built survey must include representative elevations of the bottom and side slopes. Upon SWFWMD and ACOE inspection and approval of the mitigation area, the monitoring program shall be initiated. A time zero report and semi-annual monitoring reports will be conducted for a period of three years or until the site is deemed successful. Monitoring reports must be submitted to the SWFWMD and ACOE within 30 days following each monitoring event.

At a minimum, monitoring reports should include:

1. Date planted and number of planted materials used
2. Soil stabilization measures used
3. Percent survival of planted species
4. Number of plants replanted, if necessary
5. Natural recruitment and cover
6. Wildlife usage
7. Hydrology as it relates to plant establishment
8. Nuisance species cover
9. Overall ecological evaluation

Maintenance of the mitigation area shall mean the removal of nuisance and exotic species that may interfere with the natural establishment and recruitment of the site. Nuisance vegetation will be maintained at a level not to exceed 5% cover. Maintenance will be performed on a quarterly basis or as needed to reach success. Eighty five percent cover of desirable species must be achieved prior to release. Annual replanting will be required if these criteria are not met.

RESULTS

MITIGATION AREA #1

Overall plant survival of the saltmarsh species is greater than 85% at this time due to natural mangrove recruitment. The planted marsh was designed to trap mangrove propagules during periods of tidal exchange. In mitigation area #1 which is connected to the Lowes site to the west, tidal variation ranges from almost dry to about 12 inches at peak high tide. Overall herbaceous cover at the lower elevation is about 85% but increases to about 90% at the higher elevations. The tidal exchange is sluggish, and the water tends to be brackish at about 5.1 pp.

To date, the number of saplings that have matured into trees covers the majority of the mitigation area. Most of the planting units have expanded in size except for the sand cordgrass which has been replaced by seashore paspalum. To better provide diversity in the upper edges of the wetland, Florida privet (*Forestiera segregata*) and green buttonwood (*Conocarpus erectus*) were added to the grassy matrix. Most of these units disappeared during the hurricane when tides overtopped the roadway.

Most of the woody units in the buffer (i.e., slash pine and live oak) have finally become established and range from 12-20+ feet in height. Most of the beauty berry units have died to what appears to be salt contamination. It was apparent that during the past extreme wet weather conditions, tidal levels were several feet higher than present and some of the buffer units have been stressed due to salty soils.

Mitigation Area #2

In contrast, the salt content of Mitigation Area #2 is about 3 ppt and all of the plants look in excellent condition. The overall cover of the herbaceous planting units in the marsh have spread to cover about 85% of the planting area. The deep marsh area still supports open water at the point of tidal exchange.

Black rush planting units have also increased in size and appear robust. This site appears to be tidally connected but at a higher elevation making draw-down less frequent. The bulrush was installed in the central zone and it is slowly expanding in the brackish water. Most of the other grasses, except for sand cordgrass, have expanded and now cover about 85% of the site. The existing mangrove planting units have disappeared except for propagules.

The upland buffer mirrors area #1 and new growth and added height for the oaks and pines. The upper intermediate zones were recently planted with Florida privet and green buttonwood to increase diversity, but these were toppled from the hurricanes. The city stopped mowing and will add additional signs.

UPLAND ENHANCEMENT AREA 3

This area was planted with about 45 slash pine and 50 live oak trees. Overall survival is about 90% and the installed units have formed a closed canopy. Most of the trees now exceed 15+ feet in height with little herbaceous growth due to the low light levels and past mowing. The city was mowing this area due to many youths who congregate in the evening hours behind the current adjacent owner's home. The dense shade has eliminated most of the herbaceous weedy understory.

WETLAND ENHANCEMENT AREA 4

To date, most of the Brazilian pepper in this area had died and past hurricanes have toppled many of the treated BP and other trees. About 20% of the installed trees have survived and many have been broken from Hurricane Irma. Tidal wash from the storm was up into several of the yards along the river which negatively affected most of the planted and native trees.

Previously, park staff was able to start removing the tangle mass of BP using a hydro-axe. Hurricane storm surge appears to have flooded the planting zone with salt water that killed most of the installed units. As a result, an additional 75 Florida privet and green buttonwood were added to the matrix. Most of these trees have now matured and seem to tolerate the salty conditions. Swamp fern has expanded slightly and now covers about 5% of the formerly cleared areas.

Recently, the city made another pass through the area to remove some of the hurricane debris. Natural recruitment has expanded most of the understory species in this narrow restoration zone. Some of the homeowners have removed some of the downed trees which will help with natural recruitment. This area meets the intent of the plan for enhancement.

NUISANCE VEGETATION

To date, nuisance and exotic vegetation covers less than 1% for both mitigation areas and area #3. The restoration area #4 will always struggle with some exotics due to the adjacent BP that were outside of the restoration area. Many of the planted trees have

matured and provide shade for many fern species in the understory. The city will continue to provide maintenance for this area as needed.

NATURAL RECRUITMENT

Overall recruitment of desirable species is 85% or more in area #1 and in area #2. The most common species include seashore paspalum, white mangrove, black mangrove, salt grass, marsh fleabane, spikerush, water hyssop, torpedo grass, Bermuda grass, saltbush, beggar's tick, marsh fimbry, umbrella sedge, foxtail grass, cow pea, water hyssop, *Cyperus surinamensis*, flat sedge, bahia grass, creeping Charlie, and others.

Most of the species observed within the upland or wetland enhancement areas are a mixture of weedy and native species. The most common species include guinea grass, dogfennel, Caesar's weed, beggar's tick, hairy indigo, ragweed, rustweed, crow' foot grass, Mexican tea, elderberry, swamp fern, marsh pennywort, air potato, leatherleaf fern, sawbrier and others.

SUMMARY

Overall survival of the herbaceous and woody planting units exceeds permit conditions at this time due to natural recruitment. Additional woody units were installed to compensate for losses to drought conditions, hurricanes and low rainfall amounts following the initial planting. A temporary irrigation system was installed to provide sufficient moisture for the upland species when needed but has been removed. Both of the creation sites are successful and natural recruitment has occurred. Many listed wading birds are periodically foraging in the open water areas for small fish. Nuisance vegetation is less than 1% in M1, M2, and the upland buffer. Most of the resprouting has occurred in the wetland enhancement area. The city has installed signs along the north

side of the wetland enhancement area to reduce dumping of domestic debris. The connection between M1 and the Lowes site is now dominated by native species and mangroves are recruiting throughout.

Figure1. Plan view showing the creation and enhancement areas for the North Anclote River Park.

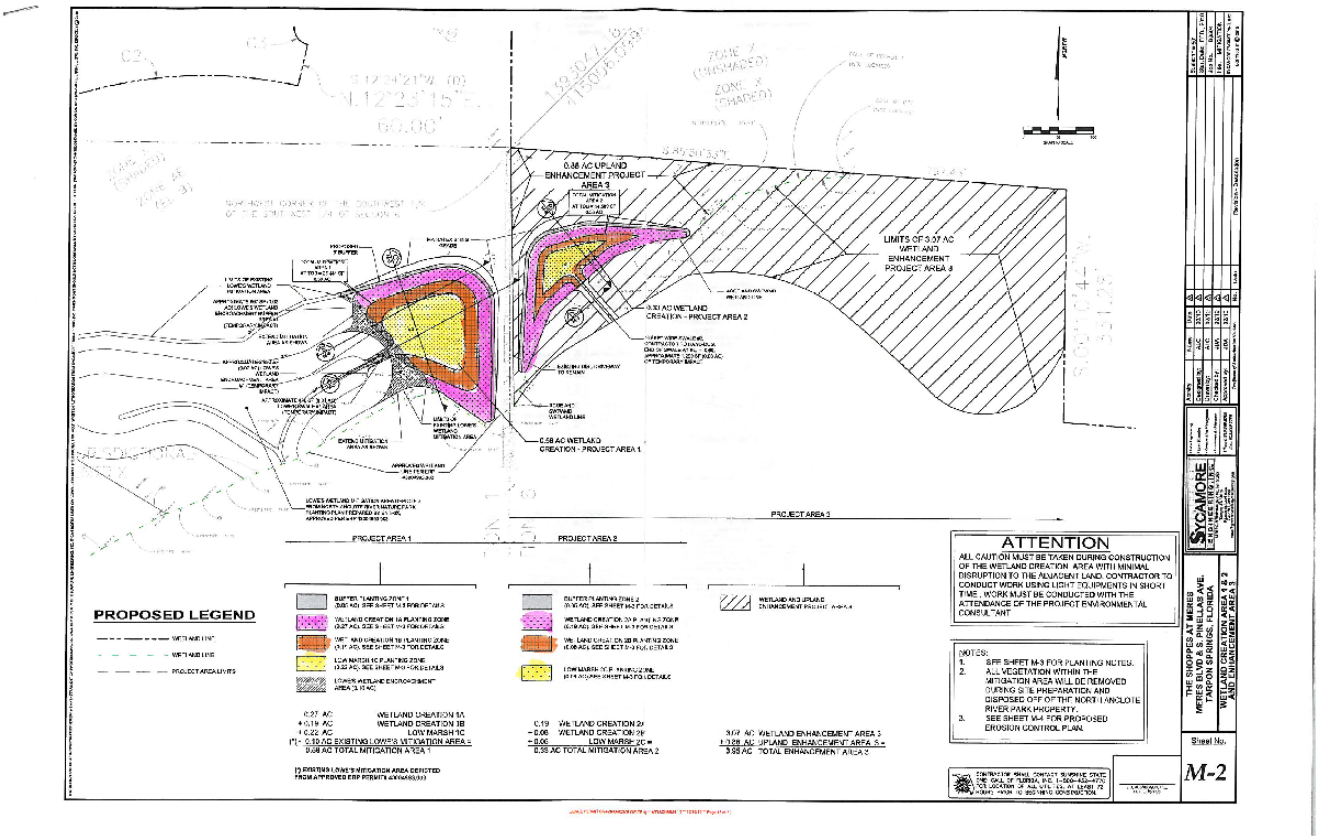

Figure 2. Mitigation Area #2 showing herbaceous planting zones.





Figure 2a. Mitigation Area #2 showing herbaceous planting zones.



Figure 3. Mitigation Area #1 showing mangrove dominance.



Figure 4. Mitigation Area #1.



Figure 5. Upland buffer enhancement planting zone for Mitigation area #2. {Note: closed canopy]



Figure 6. Wetland enhancement area showing recent mowing and native recruitment.





Figure 7. Wetland enhancement area showing recent mowing and native recruitment



ECOLOGICAL CONSULTANTS, INC.
7301 Summerbridge Drive
Tampa, Florida 33634
813-264-5859
don@floridascrub.com

14 August 2025

Ms. Lisa Bowers
Southwest Florida Water
Management District
Surface Water Permitting Section
7601 Highway 301 North
Tampa, FL. 34637

RE: Project: Shoppes at Meres Blvd.
County: Pinellas
Permit #: 43035342.002 (SWFWMD); SAJ-2009-02970 (ACOE)

Dear Lisa:

Enclosed is the Final or 7th semi-annual monitoring report for the above referenced project. The city has been doing maintenance for the past year. The sites should be released from future monitoring based on the successful recruitment and removal of exotics. If you have any questions, please contact my office as soon as possible.

Sincerely,

Donald Richardson, Ph.D.

DRR/jlr

ECOLOGICAL CONSULTANTS, INC.
7301 Summerbridge Drive
Tampa, Florida 33634
813-264-5859
don@floridascrub.com

13 August 2025

Ms. Tracy Hurst
U.S. Army Corps of Engineers
Enforcement Section
Tampa Regulatory Office
10117 Princess Palm Av., Suite 120
Tampa, FL 33610-8302

RE: Project: Shoppes at Meres Blvd.
County: Pinellas
Permit #: 43035342.002 (SWFWMD); SAJ-2009-02970 (ACOE)

Dear Tracy:

Enclosed is the 7th semi-annual monitoring report for the above referenced project. The city has been doing maintenance for the past year. The sites should be released from future monitoring based on the successful recruitment and removal of exotics. If you have any questions, please contact my office as soon as possible.

Sincerely,

Donald Richardson, Ph.D.

DRR/jlr

ECOLOGICAL CONSULTANTS, INC.
7301 Summerbridge Drive
Tampa, Florida 33634
813-264-5859
don@floridascrub.com

13 August 2025

Mr. Tom Funcheon
Public Works Director
324 E Pine Street
Tarpon Springs Fl. 34688

RE: Project: Shoppes at Meres Blvd.
County: Pinellas
Permit #: 43035342.002 (SWFWMD); SAJ-2009-02970 (ACOE)

Dear Tom:

Enclosed is the 7th semi-annual monitoring report for the above referenced project. The city has been doing maintenance for the past year. The sites should be released from future monitoring based on the successful recruitment and removal of exotics. If you have any questions, please contact my office as soon as possible.

Sincerely,

Donald Richardson, Ph.D.

DRR/jlr

APPENDIX 1
AS-BUILTS

ECOLOGICAL CONSULTANTS, INC.
5121 Ehrlich Road, Suite 103A • Tampa, Florida 33624
813 264-5859 • FAX 813-264-5957
scrub.ecl@verizon.net

August 19, 2014

Mr. Russell Martin
Southwest Florida Water Management District
7601 Highway 301
Tampa, FL 33637-6759

RE: THE SHOPPES AT MERES/PLANT MATERIALS ASBUILT

Dear Russell:

Plant materials for the above referenced project were nursery grown and installed as follows:

Mitigation Area 1:

Low Marsh 1C
525 Smooth cordgrass (4")
525 Black rush (4")

Wetland 1B
500 Sand cordgrass (4") substituted for *Paspalum distichum*
250 Patens (4") substituted for *Sporobolus virginicus*
5 Black mangroves (3g)
8 Red mangroves (3g)

Wetland 1A
1100 Saltmarsh cordgrass (4")
425 Saltgrass (4")

Buffer 1
30 Florida sunflower (4")
200 Sand cordgrass (4")
10 Marshhay cordgrass (4")
12 Beautyberry (1g)
12 Slash pine (3g)
12 Florida privet (3g)

Mitigation Area 2:

Low Marsh 2C

150	Smooth cordgrass (4")
75	Black rush (4")
75	Scirpus robustus (4")

Wetland 2B

100	Bulrush (2")
500	Joint Paspalum (2")
300	Seashore dropseed (4")
5	Black mangroves (3g)
7	Red mangroves (3g)

Wetland Area 2A

700	Saltmarsh cordgrass (4")
200	Saltgrass (4")

Buffer 2

40	Florida sunflower (4")
150	Sand cordgrass (4")
100	Marshhay cordgrass (4")
10	Beauty berry (1g)
10	Slash pine (3g)
10	Florida privet (3g)

Wetland Enhancement Area

85	Swamp bay (3g)
86	Sweet bay (3g)
40	Sweetgum (3g)
85	Buttonbush (1g)
85	Virginia willow (1g)
1700	Swamp fern (4")

Upland Enhancement Area

45	Slash pine (3g)
50	Live oak (3g)
100	Beauty berry (3g)
1533	Sand cordgrass (4")
250	Swamp fern (4")

Installation was completed on August 15, 2014. If you have any questions, please contact my office as soon as possible.

Sincerely,

Donald R. Richardson, Ph.D.

DRR/sec

CC:

J. D. Alsabbagh
Sycamore Engineering
8370 W. Hillsborough Avenue, Suite 205
Tampa, FL 33615

Ms. Angela Ryan
Corps of Engineers
Enforcement Section
10117 Princess Palm Av., Suite 120
Tampa, FL 33610-8302

State of Florida
Department of Agriculture and Consumer Services
P.O. Box 147100, Gainesville, FL 32614-7100

GENERAL NURSERY STOCK INSPECTION CERTIFICATE
47223966
ECI WETLAND PLANT NURSERY
5121 EHRLICH RD STE 103A
TAMPA FL 33624

This is to certify that this nursery stock has been visually inspected for plant pests and meets at least the minimum requirements of Chapter 581, Florida Statutes.

BOB CRAWFORD
Commissioner of Agriculture

PI-11 LIVE PLANTS — NO DELAY

City of Tarpon Springs

TRC Comment Report

324 E. Pine Street, Tarpon Springs, FL, 34689 Telephone: 727-942-5617

Project	**23.154** PNZ - SHOPPES AT MERES
Files and Attachments	20-045 et2-ET1plt.pdf Design Development
	J0308 Full Constuction Plan_SEALED_SIGNED.pdf Design Development
	J0308 Drainage Report_Signed.pdf Design Development

Instructions

Please review comments below and provide any additional required information. Your project will not be scheduled for Planning and Zoning Board, Board of Adjustments, or Board of Commission review until all required information or revised plans are provided. If no additional information is required, you will be informed of when the project scheduled for public hearing by Planning and Zoning staff.

Please keep in mind that the Planning & Zoning Division has 90-day suspense from the date of the TRC review for the submission of revisions/additional information. If revised plans/additional information are not submitted within the above referenced time frame, the application will be considered to be “EXPIRED” and a new application will have to be submitted.

If you have questions concerning any of the above information, please do not hesitate to contact the Planning Department for assistance.

Arborist

[Sheet ET1 | Comment 00004 | 20-045 et2-ET1plt.pdf]

Shannon Brewer

Due to age of document, an updated survey with ISA Certified Arborist report is required.

[Sheet L-2 | Comment 00005 | J0308 Full Constuction Plan_SEALED_SIGNED.pdf]

Shannon Brewer

Due to Pinellas Ave being an FDOT roadway, all plant material must be 10' over sidewalk and 16' over roadway unobstructed vertical clearance at planting. Please ensure specifications reflect this requirement so that excessive pruning does not occur to plant material.

[Sheet L-2 | Comment 00006 | J0308 Full Constuction Plan_SEALED_SIGNED.pdf]

Shannon Brewer

Please ensure driveway sight triangle is not obstructed with plant material.
http://https://library.municode.com/fl/tarpon_springs/codes/code_of_ordinances?nodeId=COOR_APCOZOLADECO_ARTIIISUDIRE_S37.00REVITR

[Sheet C-4 | Comment 00007 | J0308 Full Constuction Plan_SEALED_SIGNED.pdf]

Shannon Brewer

All Brazilian Pepper trees (Schinus terebinthifolius) shall be removed during the site construction process. A site inspection will be conducted to ensure that all Brazilian Pepper trees (Schinus terebinthifolius) have been removed. After the issuance of the certificate of occupancy, re-growth of Brazilian Pepper trees (Schinus terebinthifolius) shall be controlled in perpetuity by the property owner.

Fema

[Sheet C-2 | Comment 00001 | J0308 Full Constuction Plan_SEALED_SIGNED.pdf]

Megan Araya

FEMA FIRMs were updated 8/24/21. New survey reflecting current FEMA FIRM information.

[Sheet C-5 | Comment 00002 | J0308 Full Constuction Plan_SEALED_SIGNED.pdf]

Megan Araya

FEMA FIRMs were updated 8/24/21. New survey reflecting current FEMA FIRM information.

[Sheet C-5 | Comment 00016 | J0308 Full Constuction Plan_SEALED_SIGNED.pdf]

Megan Araya

Dry floodproofing requirements will be addressed at permit application submittal. Reference FEMA P-936, Design Considerations in Floodproofing, 44 CFR, ASCE 24 and FBC 2023, 8th ed. (effective 12/31/23).

Flood Zone - AE-9

Fire

[Sheet C-7 | Comment 00036 | J0308 Full Constuction Plan_SEALED_SIGNED.pdf]

Rick Kinney

A more detailed set of plans will be required for complete understanding of the building, but this structure will require sprinklers and an FDC within 100' of the on-site hydrant (no attached to the building).

Per AHJ

KPW Interim Fire Marshal 1/8/24

Planning and Zoning

[Comment 00008]

Patricia McNeese

This document contains comments from the January 4, 2024 meeting of the Technical Review Committee.

[Comment 00009]

Patricia McNeese

The project is located in the T5a (South Pinellas Ave) transect and the South Gateway Character District of the City's Special Area Plan. Office uses are allowed by right.

[Comment 00010]

Patricia McNeese

What is the current status of the following:

- Wetland jurisdictional line certification
- Army Corps of Engineer permit for wetland impacts
- Southwest Florida Water Management District permit for wetland impacts and stormwater management
- Pinellas County driveway connection permit to Meres Boulevard

[Comment 00011]

Patricia McNeese

Please provide locations on site plan, and detail sheet, for all proposed freestanding lighting and on-site traffic control signage. Designs must meet the standards of Section 127.06 of the Land Development Code.

[Sheet C-5 | Comment 00012 | J0308 Full Constuction Plan_SEALED_SIGNED.pdf]

Patricia McNeese

Page C-5 references an incorrect code for parking requirements. This project is in the Special Area Plan which requires 3 parking spaces per 1,000 square feet. This appears to result in a requirement of 39 spaces. The applicant has proposed 75 parking spaces. Please reduce the number of parking spaces or provide justification regarding the proposed number and corresponding area of fill and impervious surface proposed.

[Comment 00013]

Patricia McNeese

The SmartCode governing this site only allows landscape islands at the end of drive aisles. Please remove interior landscape islands and reduce parking.

[Sheet C-5 | Comment 00014 | J0308 Full Constuction Plan_SEALED_SIGNED.pdf]

Patricia McNeese

Please revise the Site Data table to reflect corrected FAR and ISR per Special Area Plan. Allowable FAR is 1.0. Allowable ISR is 0.90.

[Comment 00017]

Patricia McNeese

The applicant should be aware of the following Land Development Code amendments that may affect the project. These amendments have not yet been codified in Municode. The executed ordinances are included with this comment transmission:

- Ordinance 2023-08 regarding fees and charges
- Ordinance 2022-24 regarding development in the Coastal High Hazard Area
- Ordinance 2023-09 regarding expiration of development orders

[Comment 00018]

Patricia McNeese

Please provide wetland mitigation information.

[Comment 00020]

Patricia McNeese

Please provide full elevation views for each side of the building that match the building footprint. Elevation views should show pedestrian accessibility features related to the street and the parking lot.

[Comment 00030]

Patricia McNeese

Please add a sidewalk along Apricot Court along the entire length of the property.

[Sheet C-5 | Comment 00031 | J0308 Full Constuction Plan_SEALED_SIGNED.pdf]

Patricia McNeese

The Meres Boulevard access currently indicates all turning movements allowable. Please provide coordination or connection permit from Pinellas County indicating approval of turning configuration for the Meres Boulevard access.

[Comment 00034]

Patricia McNeese

The Certificate of Concurrency lists the use as retail and uses the ITE trip generation category (820) for shopping center. Please revise all facilities impacts to reflect the medical office uses proposed. Please also update the facilities impacts table on the plan set to reflect the correct use and match the figures provided on the Certificate of Concurrency.

[Comment 00035]

Patricia McNeese

The geotechnical report is 13 years old. It has significant recommendations, apparently based on limited borings with respect to buildings and drainage on the site. Please be aware that a new or updated geotechnical report may be required by the Building Official and/or City consulting engineeer.

[Comment 00037]

Patricia McNeese

The applicant stated at the Technical Review Committee meeting that a note would be added to the plan set to include relocation of the gate on Apricot Court as part of the project.

[Comment 00038]

Patricia McNeese

It is noted that the cover sheet proposes a phasing plan for this project. Please provide a narrative description and details of exactly what is included with each proposed phase and the timing of each phase. Please be aware that the phasing must be approved by the Board of Commissioners pursuant to Section 210.05 of the Land Development Code. That section of code has been updated under Ordinance 2023-09 and is not yet codified in Municode. A copy of the ordinance was supplied to the applicant.

Public Services

[Sheet C-1 | Comment 00033 | J0308 Full Constuction Plan_SEALED_SIGNED.pdf]

Heather Freundel

Please provide the estimated water and sewer flows

This parcel shall be master metered.

This shall be an above ground reduced pressure meter assembly.

Contractor shall field verify utilities and the contractor shall complete and install both potable water and sanitary sewer taps.

The City requires 48 hours notice prior to any work completed on the mains.

Any adjustments to the utilities due to the project are the contractor’s responsibility.

All restoration is the contractor's responsibility.

Public Works

[Sheet ET1 | Comment 00003 | 20-045 et2-ET1plt.pdf]

Anthony Mannello

Assure all sediment, erosion, turbidity BMP's are installed.

Stormwater

[Sheet 1 | Comment 00021 | J0308 Drainage Report_Signed.pdf]

Robert Dorzback

The calculations presented in the drainage report are outdated and do not reflect the construction plans. Please resubmit an updated report with revised drainage calculations, bound as a single document, and signed and sealed by the project engineer.

[Sheet 7 | Comment 00022 | J0308 Drainage Report_Signed.pdf]

Robert Dorzback

The analysis presented in the drainage report does not reflect the proposed construction plans. Inconsistent items include:
(1) Post Development Curve Number;
(2) Pond Stage-Storage and Provided Water Quality Calculations;
(3) Hydraulic Conductivity and Bleed Down Calculations;
(4) ICPR Parameters - Post Basin, Node stage-storage for pond, weir invert and span, and pond 25yr/24hr peak stage.

[Sheet 5 | Comment 00023 | J0308 Drainage Report_Signed.pdf]

Robert Dorzback

Review of current FDEP data show that the project's WBID is on the Verified List as impaired for metals (iron) and on the Study List for nutrients. Therefore, it appears that net improvement would not be required.

[Sheet 5 | Comment 00024 | J0308 Drainage Report_Signed.pdf]

Robert Dorzback

The project's WBID is part of the Pinellas County Aquatic Preserve, which is an Outstanding Florida Water (OFW). As such, the project will require an additional 50% treatment volume above the standard presumptive treatment criteria.

[Sheet C-1 | Comment 00025 | J0308 Full Constuction Plan_SEALED_SIGNED.pdf]

Robert Dorzback

Please submit a copy of a valid SWFWMD permit for this project prior to construction.

[Sheet C-6 | Comment 00026 | J0308 Full Constuction Plan_SEALED_SIGNED.pdf]

Robert Dorzback

Pond shown in construction plans does not provide the required water quality treatment volume indicated in the drainage report.

[Sheet C-6 | Comment 00027 | J0308 Full Constuction Plan_SEALED_SIGNED.pdf]

Robert Dorzback

Plan Sheet C-6 shows 100% walled pond with wall footers extending below the SHW table, and excavation/backfill of clean soil to the SHW table. Based on Plan Sheet C-6, Section A, it appears there will be no horizontal flow through the clean backfill due to the wall footers, and pond recovery would be controlled by the hydraulic conductivity of the in-situ soils below the pond bottom. Per the Geotech Report, limited subsurface investigation was conducted for this site. The auger boring closest to the pond site had high organic matter, silty fine sands, and clay.

[Sheet C-6 | Comment 00028 | J0308 Full Constuction Plan_SEALED_SIGNED.pdf]

Robert Dorzback

Show elevations of wall footers on construction plans, and demonstrate with calculations in the drainage report that the pond meets water quality recovery time criteria.

[Sheet C-6 | Comment 00029 | J0308 Full Constuction Plan_SEALED_SIGNED.pdf]

Robert Dorzback

Soil permeability testing at the pond site will be required during and after construction to verify acceptable hydraulic conductivity rates have been provided for water quality recovery.

Reviewers

Megan Araya
(727) 942-5604
maraya@ctsfl.us

Anthony Mannello
(727) 938-3711
amannello@ctsfl.us

Shannon Brewer
(727) 942-5617
sbrewer@ctsfl.us

Patricia McNeese
(727) 942-5611
pmcneese@ctsfl.us

Robert Dorzback
(813) 446-7078
Robert.Dorzback@wsp.com

Heather Freundel
(727) 938-3711
hfreundel@ctsfl.us

Rick Kinney
(727) 938-3737
rkinney@tsfr.us

City of Tarpon Springs

TRC Comment Report

324 E. Pine Street, Tarpon Springs, FL, 34689 Telephone: 727-942-5617

Project	**23.154** PNZ - SHOPPES AT MERES
Files and Attachments	20-045 et2-ET1plt.pdf 50 Percent Phase J0308 Full Constuction Plan_SEALED_SIGNED.pdf 50 Percent Phase

Instructions

Please review comments below and provide any additional required information. Your project will not be scheduled for Planning and Zoning Board, Board of Adjustments, or Board of Commission review until all required information or revised plans are provided. If no additional information is required, you will be informed of when the project scheduled for public hearing by Planning and Zoning staff.

Please keep in mind that the Planning & Zoning Division has 90-day suspense from the date of the TRC review for the submission of revisions/additional information. If revised plans/additional information are not submitted within the above referenced time frame, the application will be considered to be “EXPIRED” and a new application will have to be submitted.

If you have questions concerning any of the above information, please do not hesitate to contact the Planning Department for assistance.

Arborist

[Sheet ET1 | Comment 00004 | 20-045 et2-ET1plt.pdf]

Shannon Brewer

Due to age of document, an updated survey with ISA Certified Arborist report is required.

COMMENT UPDATE: The date on the tree survey submitted is December 12, 2020. An updated survey with ISA Certified Arborist report is required.

[Sheet L-2 | Comment 00005 | J0308 Full Constuction Plan_SEALED_SIGNED.pdf]

Shannon Brewer

ADVISORY COMMENT: Due to Pinellas Ave being an FDOT roadway, all plant material must be 10' over sidewalk and 16' over roadway unobstructed vertical clearance at planting. Please ensure specifications reflect this requirement so that excessive pruning does not occur to plant material.

[Sheet L-2 | Comment 00006 | J0308 Full Constuction Plan_SEALED_SIGNED.pdf]

Shannon Brewer

Please ensure driveway sight triangle is not obstructed with plant material. http://https://library.municode.com/fl/tarpon_springs/codes/code_of_ordinances?nodeId=COOR_APCOZOLADECO_ARTIIISUDIRE_S37.00REVITR

COMMENT UPDATE: Please revise the visibility sight triangles for both driveways and both intersections to comply with the standards of Section 37.00 of the Land Development Code.

[Sheet C-4 | Comment 00007 | J0308 Full Constuction Plan_SEALED_SIGNED.pdf]

Shannon Brewer

ADVISORY COMMENT: All Brazilian Pepper trees (Schinus terebinthifolius) shall be removed during the site construction process. A site inspection will be conducted to ensure that all Brazilian Pepper trees (Schinus terebinthifolius) have been removed. After the issuance of the certificate of occupancy, re-growth of Brazilian Pepper trees (Schinus terebinthifolius) shall be controlled in perpetuity by the property owner.

Fema

[Sheet C-5 | Comment 00016 | J0308 Full Constuction Plan_SEALED_SIGNED.pdf]

Megan Araya

ADVISORY COMMENT: Dry floodproofing requirements will be addressed at permit application submittal. Reference FEMA P-936, Design Considerations in Floodproofing, 44 CFR, ASCE 24 and FBC 2023, 8th ed. (effective 12/31/23).

Flood Zone - AE-9

Fire

[Sheet C-1 | Comment 00036 | J0308 Full Constuction Plan_SEALED_SIGNED.pdf]

Rick Kinney

ADVISORY COMMENT: more detailed set of plans will be required for complete understanding of the building, but this structure will require sprinklers and an FDC within 100' of the on-site hydrant (no attached to the building).

Per AHJ

KPW Interim Fire Marshal 1/8/24

Planning and Zoning

[Sheet C-5 | Comment 00012 | J0308 Full Constuction Plan_SEALED_SIGNED.pdf]

Patricia McNeese

Page C-5 references an incorrect code for parking requirements. This project is in the Special Area Plan which requires 3 parking spaces per 1,000 square feet. This appears to result in a requirement of 39 spaces. The applicant has proposed 75 parking spaces. Please reduce the number of parking spaces or provide justification regarding the proposed number and corresponding area of fill and impervious surface proposed.

COMMENT UPDATE 7-11-2024 (ADVISORY): Applicant has stated that 75 spaces are needed and allowable based on allowable impervious surface ratio. Staff will include this information in the staff report for this project but will recommend that overparking will create additional heat islands in the City. Staff will recommend reduce parking by at least 1/3 and add landscaping using silva cells or other appropriate methods to reduce heat islands and impervious surface.

[Comment 00020]

Patricia McNeese

Please provide full elevation views for each side of the building that match the building footprint. Elevation views should show pedestrian accessibility features related to the street and the parking lot.

COMMENT UPDATE: Elevation views provided show a building frontage with a linear plane that does not appear to match the building layout showing a multi-angled linear frontage and corner.

[Comment 00030]

Patricia McNeese

Please add a sidewalk along Apricot Court along the entire length of the property.

[Sheet C-5 | Comment 00031 | J0308 Full Constuction Plan_SEALED_SIGNED.pdf]

Patricia McNeese

The Meres Boulevard access currently indicates all turning movements allowable. Please provide coordination or connection permit from Pinellas County indicating approval of turning configuration for the Meres Boulevard access.

COMMENT UPDATE (ADVISORY): Please be aware that written approval from Pinellas County for the driveway connection and configuration will be required before the project is scheduled for hearing.

[Comment 00037]

Patricia McNeese

The applicant stated at the Technical Review Committee meeting that a note would be added to the plan set to include relocation of the gate on Apricot Court as part of the project.

[Comment 00044]

Patricia McNeese

This document contains comments resulting from the July 11, 2024 meeting of the Technical Review Committee.

[Comment 00045]

Patricia McNeese

Applicant notes on page 4 (Sheet C-4) that wetland impacts have been permitted by the U.S. Army Corps of Engineers (ACOE) and the Southwest Florida Water Management District (SWFWMD) and that impacts have been fully mitigated. The applicant indicated that an extension of the ACOE permit was included but it was not located in the submittal.

[Comment 00046]

Patricia McNeese

Please provide an updated wildlife and habitat survey for the property.

Public Services

[Sheet C-1 | Comment 00033 | J0308 Full Constuction Plan_SEALED_SIGNED.pdf]

Heather Freundel

Please provide the estimated water and sewer flows.

This parcel shall be master metered.

This shall be an above ground reduced pressure meter assembly.

Contractor shall field verify utilities and the contractor shall complete and install both potable water and sanitary sewer taps.

The City requires 48 hours notice prior to any work completed on the mains.

Any adjustments to the utilities due to the project are the contractor’s responsibility.

All restoration is the contractor's responsibility.

[Comment 00039 | J0308 Full Constuction Plan_SEALED_SIGNED.pdf]

Heather Freundel

Please indicate water and sewer flows separately on the plans. Sewer flows should generally be less than water consumption.

[Comment 00041 | J0308 Full Constuction Plan_SEALED_SIGNED.pdf]

Heather Freundel

There shall be NO connection to the 20" potable water main, this includes both your potable water meter and the fire asssembly.

[Comment 00042 | J0308 Full Constuction Plan_SEALED_SIGNED.pdf]

Heather Freundel

Plan states 6" reclaimed meter but service line is 2"

[Comment 00043 | J0308 Full Constuction Plan_SEALED_SIGNED.pdf]

Heather Freundel

Proposed 6" sanitary line must be 8" per City Code 136.02 (C)

Any change in direction in the sanitary sewer line shall require a manhole per City Code 136.02 (D)

Please provide the estimated sewer flows per City Code 136.02 (G)

Stormwater

[Sheet C-1 | Comment 00025 | J0308 Full Constuction Plan_SEALED_SIGNED.pdf]

Robert Dorzback

ADVISORY COMMENT: Please submit a copy of a valid SWFWMD permit for this project prior to construction.

[Comment 00040]

Robert Dorzback

On Plan Sheet C-6, Pond Note #5 calls for permeability testing to be performed after construction and must meet or exceed the rate used in the calculations. State in note #5 the minimum required permeability rate that must be achieved. These testing results must also be submitted to the City prior to issuance of the building certificate of occupancy.

Reviewers

Shannon Brewer
(727) 942-5617
sbrewer@ctsfl.us

Patricia McNeese
(727) 942-5611
pmcneese@ctsfl.us

Megan Araya
(727) 942-5604
maraya@ctsfl.us

Robert Dorzback
(813) 446-7078

Robert.Dorzback@wsp.com

Heather Freundel
(727) 938-3711
hfreundel@ctsfl.us

Rick Kinney
(727) 938-3737
rkinney@tsfr.us

City of Tarpon Springs

TRC Comment Report

324 E. Pine Street, Tarpon Springs, FL, 34689 Telephone: 727-942-5617

Project	**23.154** PNZ - SHOPPES AT MERES
Files and Attachments	Construction Plans_Sealed_Signed.pdf 75 Percent Phase signed and sealed survey.pdf 50 Percent Phase

Instructions

Please review comments below and provide any additional required information. Your project will not be scheduled for Planning and Zoning Board, Board of Adjustment, or Board of Commissioners review until all required information or revised plans are provided. If no additional information is required, you will be informed of when the project will be scheduled for public hearing by Planning and Zoning staff. Please keep in mind that the Planning & Zoning Department has 90-day suspension period from the date of the TRC review for the submittal of revisions/additional information. If revised plans/additional information are not submitted within the above referenced time frame, the application will be considered to be “EXPIRED” and a new application will have to be submitted. If you have questions concerning any of the above information, please do not hesitate to contact the Planning and Zoning Department for assistance.

Arborist

[Sheet C-4 | Comment 00007 | Construction Plans_Sealed_Signed.pdf]

Shannon Brewer

ADVISORY COMMENT: All Brazilian Pepper trees (Schinus terebinthifolius) shall be removed during the site construction process. A site inspection will be conducted to ensure that all Brazilian Pepper trees (Schinus terebinthifolius) have been removed. After the issuance of the certificate of occupancy, re-growth of Brazilian Pepper trees (Schinus terebinthifolius) shall be controlled in perpetuity by the property owner.

[Sheet L-2 | Comment 00050 | Construction Plans_Sealed_Signed.pdf]

Shannon Brewer

ADVISORY COMMENT: Canopy of holly tree is indicated as to be in the visibility triangle. Planting location may need to be modified.

[Sheet 1 | Comment 00051 | signed and sealed survey.pdf]

Shannon Brewer

ADVISORY COMMENT: At time of permitting, arborist must be updated to match current topo.

Fema

[Sheet C-5 | Comment 00016 | Construction Plans_Sealed_Signed.pdf]

Megan Araya

ADVISORY COMMENT: Dry floodproofing requirements will be addressed at permit application submittal. Reference FEMA P-936, Design Considerations in Floodproofing, 44 CFR, ASCE 24 and FBC 2023, 8th ed. (effective 12/31/23).

Flood Zone - AE-9

Fire

[Sheet C-1 | Comment 00036 | Construction Plans_Sealed_Signed.pdf]

Rick Kinney

ADVISORY COMMENT: more detailed set of plans will be required for complete understanding of the building, but this structure will require sprinklers and an FDC within 100' of the on-site hydrant (no attached to the building).

Per AHJ

Planning and Zoning

[Sheet C-5 | Comment 00012 | Construction Plans_Sealed_Signed.pdf]

Patricia McNeese

Page C-5 references an incorrect code for parking requirements. This project is in the Special Area Plan which requires 3 parking spaces per 1,000 square feet. This appears to result in a requirement of 39 spaces. The applicant has proposed 75 parking spaces. Please reduce the number of parking spaces or provide justification regarding the proposed number and corresponding area of fill and impervious surface proposed.

COMMENT UPDATE 7-11-2024 (ADVISORY): Applicant has stated that 75 spaces are needed and allowable based on allowable impervious surface ratio. Staff will include this information in the staff report for this project but will recommend that overparking will create additional heat islands in the City. Staff will recommend reduce parking by at least 1/3 and add landscaping using silva cells or other appropriate methods to reduce heat islands and impervious surface.

COMMENT UPDATE 12-5-2024 (ADVISORY): The applicant provided information regarding planned pervious pavement. While this does reduce the impervious surface, it does not reduce heat islands as described above. Staff will provide all of this information in the staff report that is prepared for the hearing before the Board of Commissioners.

[Sheet C-5 | Comment 00031 | Construction Plans_Sealed_Signed.pdf]

Patricia McNeese

The Meres Boulevard access currently indicates all turning movements allowable. Please provide coordination or connection permit from Pinellas County indicating approval of turning configuration for the Meres Boulevard access.

COMMENT UPDATE 12-5-2024 (ADVISORY): Please be aware that written approval from Pinellas County for the driveway connection and configuration will be required before the project is scheduled for hearing. This has been confirmed by the Planning and Zoning Director.

[Comment 00045]

Patricia McNeese

Applicant notes on page 4 (Sheet C-4) that wetland impacts have been permitted by the U.S. Army Corps of Engineers (ACOE) and the Southwest Florida Water Management District (SWFWMD) and that impacts have been fully mitigated. The applicant indicated that an extension of the ACOE permit was included but it was not located in the submittal.

COMMENT UPDATE 12/5/2024 (ADVISORY): Thank you for uploading the latest ACOE and SWFWMD permit information. If the ACOE updated permit has not been received prior to scheduling this project for hearing, it will be required as a condition of Site Plan approval. The City's stormwater review consultant has been made aware of the uploaded SWFWMD permit.

[Comment 00052]

Patricia McNeese

This document contains comments resulting from the December 5, 2024 meeting of the Technical Review Committee.

[Comment 00053]

Patricia McNeese

It is noted that the revised concurrency certificate notes 38 peak hour trips for the "Medical-Dental Office Building" use (ITE Trip Generation Manual category #720). However, it appears that the 11th edition of the ITE Manual would generate 51 peak hour trips based on the gross floor area of 13,057 square feet and a trip generation rate of 3.93 for the PM peak hour. Can you please verify staff's assessment or indicate the method used for the proposed number?

[Sheet C-6 | Comment 00057 | Construction Plans_Sealed_Signed.pdf]

Patricia McNeese

It is noted that the proposed finished floor of the structure is 7.00 feet. The proposed adjacent grade is 6.90 feet. Since 2021, the required flood zone elevation has decreased from 10 feet to 9 feet. It is advised that elevation is preferable to multi-tenant dry floodproofing due to the low level of practicality of the latter method.

This TRC report transmission is accompanied with guidelines for elevation of finished floors within the City's Special Area Plan. It may be practical to raise the interior finished floor to 10 feet (BFE + 1) using these design guidelines. This option is advisory only, but would provide a much more practical and resilient building over the longer term. It may also likely reduce the cost of flood insurance on this building.

[Comment 00058]

Patricia McNeese

Note that Section 210.05 of the Land Development Code (LDC) requires that a construction or building permit for the project be issued within six (6) months of the Site Plan approval. Please be advised that due to changes to the City's Comprehensive Plan, staff will be recommending to the Board of Commissioners that permits for both the site work, and the

building (vertical construction) must be applied for concurrently and must be issued concurrently within that timeframe.

Public Services

[Sheet C-1 | Comment 00033 | Construction Plans_Sealed_Signed.pdf]

Heather Freundel

ADVISORY COMMENT: Please provide the estimated water and sewer flows.

This parcel shall be master metered.

This shall be an above ground reduced pressure meter assembly.

Contractor shall field verify utilities and the contractor shall complete and install both potable water and sanitary sewer taps.

The City requires 48 hours notice prior to any work completed on the mains.

Any adjustments to the utilities due to the project are the contractor’s responsibility.

All restoration is the contractor's responsibility.

[Sheet C-5 | Comment 00039 | Construction Plans_Sealed_Signed.pdf]

Heather Freundel

Please indicate water and sewer flows separately on the plans. Sewer flows should generally be less than water consumption.

[Sheet C-7 | Comment 00042 | Construction Plans_Sealed_Signed.pdf]

Heather Freundel

Plan states 6" reclaimed meter but service line is 2"

COMMENT UPDATE 12/5/2024: If using reclaimed water, please provide the valve at the line connection to the street, as discussed at the Technical Review Committee meeting.

[Sheet C-7 | Comment 00043 | Construction Plans_Sealed_Signed.pdf]

Heather Freundel

Proposed 6" sanitary line must be 8" per City Code 136.02 (C)

Any change in direction in the sanitary sewer line shall require a manhole per City Code 136.02 (D)

Please provide the estimated sewer flows per City Code 136.02 (G).

[Sheet C-7 | Comment 00054 | Construction Plans_Sealed_Signed.pdf]

Heather Freundel

Copied from other page note Needs to be addressed

Proposed 6" sanitary line must be 8" per City Code 136.02 (C)

Any change in direction in the sanitary sewer line shall require a manhole per City Code 136.02 (D)

Please provide the estimated sewer flows per City Code 136.02 (G)

[Sheet C-7 | Comment 00055 | Construction Plans_Sealed_Signed.pdf]

Heather Freundel

Please confirm if connecting to reclaimed or potable water for irrigation.

[Sheet C-9 | Comment 00056 | Construction Plans_Sealed_Signed.pdf]

Heather Freundel

Must use City of Tarpon Springs Standard Details, not Pinellas County. The City standard details can be found on the website at this link.

City of Tarpon Springs

TRC Comment Report

324 E. Pine Street, Tarpon Springs, FL, 34689 Telephone: 727-942-5617

Project	**23.154** PNZ - SHOPPES AT MERES
Files and Attachments	CONSTRUCTION PLANS_SIGNED.pdf 90 Percent Phase signed and sealed survey.pdf 50 Percent Phase

Instructions

Please review comments below and provide any additional required information. Your project will not be scheduled for Planning and Zoning Board, Board of Adjustment, or Board of Commissioners review until all required information or revised plans are provided. If no additional information is required, you will be informed of when the project will be scheduled for public hearing by Planning and Zoning staff. Please keep in mind that the Planning & Zoning Department has 90-day suspension period from the date of the TRC review for the submittal of revisions/additional information. If revised plans/additional information are not submitted within the above referenced time frame, the application will be considered to be “EXPIRED” and a new application will have to be submitted. If you have questions concerning any of the above information, please do not hesitate to contact the Planning and Zoning Department for assistance.

Arborist

[Sheet C-4 | Comment 00007 | CONSTRUCTION PLANS_SIGNED.pdf]

Shannon Brewer

ADVISORY COMMENT: All Brazilian Pepper trees (Schinus terebinthifolius) shall be removed during the site construction process. A site inspection will be conducted to ensure that all Brazilian Pepper trees (Schinus terebinthifolius) have been removed. After the issuance of the certificate of occupancy, re-growth of Brazilian Pepper trees (Schinus terebinthifolius) shall be controlled in perpetuity by the property owner.

[Sheet L-2 | Comment 00050 | CONSTRUCTION PLANS_SIGNED.pdf]

Shannon Brewer

ADVISORY COMMENT: Canopy of holly tree is indicated as to be in the visibility triangle. Planting location may need to be modified.

[Sheet 1 | Comment 00051 | signed and sealed survey.pdf]

Shannon Brewer

ADVISORY COMMENT: At time of permitting, arborist must be updated to match current topo.

Fema

[Sheet C-5 | Comment 00016 | CONSTRUCTION PLANS_SIGNED.pdf]

Megan Araya

ADVISORY COMMENT: Dry floodproofing requirements will be addressed at permit application submittal. Reference FEMA P-936, Design Considerations in Floodproofing, 44 CFR, ASCE 24 and FBC 2023, 8th ed. (effective 12/31/23).

Flood Zone - AE-9

Fire

[Sheet C-1 | Comment 00036 | CONSTRUCTION PLANS_SIGNED.pdf]

Rick Kinney

ADVISORY COMMENT: more detailed set of plans will be required for complete understanding of the building, but this structure will require sprinklers and an FDC within 100' of the on-site hydrant (no attached to the building).

Per AHJ

Planning and Zoning

[Sheet C-5 | Comment 00031 | CONSTRUCTION PLANS_SIGNED.pdf]

Patricia McNeese

The Meres Boulevard access currently indicates all turning movements allowable. Please provide coordination or connection permit from Pinellas County indicating approval of turning configuration for the Meres Boulevard access.

COMMENT UPDATE 12-5-2024 (ADVISORY): Please be aware that written approval from Pinellas County for the driveway connection and configuration will be required before the project is scheduled for hearing. This has been confirmed by the Planning and Zoning Director.

COMMENT UPDATE 4-3-2025: The applicant stated at the TRC meeting that the driveway configuration to Meres Blvd is designed for a right-in/right-out configuration. Please change the pavement marking in the egress lane to show a right-turn arrow. Please also indicate signage at this egress stating "right turn only."

[Comment 00053]

Patricia McNeese

It is noted that the revised concurrency certificate notes 38 peak hour trips for the "Medical-Dental Office Building" use (ITE Trip Generation Manual category #720). However, it appears that the 11th edition of the ITE Manual would generate 51 peak hour trips based on the gross floor area of 13,057 square feet and a trip generation rate of 3.93 for the PM peak hour. Can you please verify staff's assessment or indicate the method used for the proposed number?

4/3/2025 COMMENT UPDATE; ADVISORY: The applicant has revised the total peak hour trips for this use to 51. This triggers the requirement of a Transportation Management Plan pursuant to Section 122.11.03 of the Land Development Code. However, staff feels the trips are mitigated by two factors: There is a transit stop located on the same side of N. Pinellas Avenue approximately 280 feet north of the site, and, the applicant is proposing bicycle racks on site. Staff will recommend to the Board of Commissioners that these two existing factors mitigate the additional peak hour trips for this use.

Also, the applicant has noted 1,960 gallons per day for both the potable water consumption and the sanitary sewer generation. Please revise to reflect more accurate numbers per Public Services' comment. Please revise this on the plans and on the Concurrency Certificate application.

[Comment 00063]

Patricia McNeese

This document contains comments resulting from the April 3, 2025 meeting of the Technical Review Committee.

Public Services

[Sheet C-1 | Comment 00033 | CONSTRUCTION PLANS_SIGNED.pdf]

Heather Estright

ADVISORY COMMENT: Please provide the estimated water and sewer flows.

This parcel shall be master metered.

This shall be an above ground reduced pressure meter assembly.

Contractor shall field verify utilities and the contractor shall complete and install both potable water and sanitary sewer taps.

The City requires 48 hours notice prior to any work completed on the mains.

Any adjustments to the utilities due to the project are the contractor’s responsibility.

All restoration is the contractor's responsibility.

[Sheet C-5 | Comment 00039 | CONSTRUCTION PLANS_SIGNED.pdf]

Heather Estright

Please indicate water and sewer flows separately on the plans. Sewer flows should generally be less than water consumption.

[Sheet C-7 | Comment 00042 | CONSTRUCTION PLANS_SIGNED.pdf]

Heather Estright

Plan states 6" reclaimed meter but service line is 2"

COMMENT UPDATE 12/5/2024: If using reclaimed water, please provide the valve at the line connection to the street, as discussed at the Technical Review Committee meeting.

[Sheet C-7 | Comment 00043 | CONSTRUCTION PLANS_SIGNED.pdf]

Heather Estright

Proposed 6" sanitary line must be 8" per City Code 136.02 (C)

Any change in direction in the sanitary sewer line shall require a manhole per City Code 136.02 (D)

Please provide the estimated sewer flows per City Code 136.02 (G).

[Sheet C-9 | Comment 00056 | CONSTRUCTION PLANS_SIGNED.pdf]

Heather Estright

Must use City of Tarpon Springs Standard Details, not Pinellas County. The City standard details can be found on the website at this link.

[Sheet C-7 | Comment 00059 | CONSTRUCTION PLANS_SIGNED.pdf]

Heather Estright

Please indicate fire assembly size

[Sheet C-7 | Comment 00060 | CONSTRUCTION PLANS_SIGNED.pdf]

Heather Estright

Please clarify meter and RP size-plan indicates 1" w/ 1.5" RP- Please identify assembly as 1" or 1.5"

[Sheet C-7 | Comment 00061 | CONSTRUCTION PLANS_SIGNED.pdf]

Heather Estright

Code 135.01 (B) (7)

The minimum line size for hydrant placing shall be a 6 inch looped line. Dead end lines shall be a minimum of 8 inches in size and shall not exceed 600 feet in length. Dead end lines shall be avoided unless impractical.

[Sheet C-7 | Comment 00062 | CONSTRUCTION PLANS_SIGNED.pdf]

Heather Estright

Please specify estimated water and sewer flows separately on the plans Sheet C-5.

City of Tarpon Springs

TRC Comment Report

324 E. Pine Street, Tarpon Springs, FL, 34689 Telephone: 727-942-5617

Project	**23.154** PNZ - SHOPPES AT MERES
Files and Attachments	CONSTRUCTION PLANS_SEALED_SIGNED.pdf 100 Percent Phase

Instructions

Please review comments below and provide any additional required information. Your project will not be scheduled for Planning and Zoning Board, Board of Adjustment, or Board of Commissioners review until all required information or revised plans are provided. If no additional information is required, you will be informed of when the project will be scheduled for public hearing by Planning and Zoning staff. Please keep in mind that the Planning & Zoning Department has 90-day suspension period from the date of the TRC review for the submittal of revisions/additional information. If revised plans/additional information are not submitted within the above referenced time frame, the application will be considered to be “EXPIRED” and a new application will have to be submitted. If you have questions concerning any of the above information, please do not hesitate to contact the Planning and Zoning Department for assistance.

Fema

[Sheet C-5 | Comment 00016 | CONSTRUCTION PLANS_SEALED_SIGNED.pdf]

Megan Araya

ADVISORY COMMENT: Dry floodproofing requirements will be addressed at permit application submittal. Reference FEMA P-936, Design Considerations in Floodproofing, 44 CFR, ASCE 24 and FBC 2023, 8th ed. (effective 12/31/23).

Flood Zone - AE-9

Fire

[Sheet C-1 | Comment 00036 | CONSTRUCTION PLANS_SEALED_SIGNED.pdf]

Rick Kinney

ADVISORY COMMENT: more detailed set of plans will be required for complete understanding of the building, but this structure will require sprinklers and an FDC within 100' of the on-site hydrant (no attached to the building).

Per AHJ

KPW Interim Fire Marshal 1/8/24

Planning and Zoning

[Sheet C-5 | Comment 00031 | CONSTRUCTION PLANS_SEALED_SIGNED.pdf]

Patricia McNeese

The Meres Boulevard access currently indicates all turning movements allowable. Please provide coordination or connection permit from Pinellas County indicating approval of turning configuration for the Meres Boulevard access.

COMMENT UPDATE 12-5-2024 (ADVISORY): Please be aware that written approval from Pinellas County for the driveway connection and configuration will be required before the project is scheduled for hearing. This has been confirmed by the Planning and Zoning Director.

COMMENT UPDATE 4-3-2025: The applicant stated at the TRC meeting that the driveway configuration to Meres Blvd is designed for a right-in/right-out configuration. Please change the pavement marking in the egress lane to show a right-turn arrow. Please also indicate signage at this egress stating "right turn only."

COMMENT UPDATE 5/1/2025: The City has been notified by Pinellas County Public Works that the driveway access connection to Meres Boulevard has been denied. Please remove this driveway connection from the site plan and indicate appropriate landscape treatment in this area ***(see new comment (Comment #68) regarding appropriate landscaping for the Meres Blvd frontage line).***

[Comment 00045]

Patricia McNeese

Applicant notes on page 4 (Sheet C-4) that wetland impacts have been permitted by the U.S. Army Corps of Engineers (ACOE) and the Southwest Florida Water Management District (SWFWMD) and that impacts have been fully mitigated. The applicant indicated that an extension of the ACOE permit was included but it was not located in the submittal.

COMMENT UPDATE 12/5/2024 : Thank you for uploading the latest ACOE and SWFWMD permit information. It is noted that the SWFWMD permit has been extended to June 4, 2029. The ACOE permit expired on February 27, 2019. If the new or extended ACOE permit has not been received prior to scheduling this project for hearing, it will be required as a condition of Site Plan approval. The City will require some type of written receipt or copy of submitted documents to the ACOE to show that the applicant has applied for the permit extension/re-issuance.

[Comment 00053]

Patricia McNeese

It is noted that the revised concurrency certificate notes 38 peak hour trips for the "Medical-Dental Office Building" use (ITE Trip Generation Manual category #720). However, it appears that the 11th edition of the ITE Manual would generate 51 peak hour trips based on the gross floor area of 13,057 square feet and a trip generation rate of 3.93 for the PM peak hour. Can you please verify staff's assessment or indicate the method used for the proposed number?

4/3/2025 COMMENT UPDATE; ADVISORY: The applicant has revised the total peak hour trips for this use to 51. This triggers the requirement of a Transportation Management Plan pursuant to Section 122.11.03 of the Land Development Code. However, staff feels the trips are mitigated by two factors: There is a transit stop located on the same side of N. Pinellas Avenue approximately 280 feet north of the site, and, the applicant is proposing bicycle racks on site. Staff will recommend to the Board of Commissioners that these two existing factors mitigate the additional peak hour trips for this use.

Also, the applicant has noted 1,960 gallons per day for both the potable water consumption and the sanitary sewer generation. Please revise to reflect more accurate numbers per Public Services' comment. Please revise this on the plans and on the Concurrency Certificate application.

[Comment 00058]

Patricia McNeese

ADVISORY COMMENT: Note that Section 210.05 of the Land Development Code (LDC) requires that a construction or building permit for the project be issued within six (6) months of the Site Plan approval. Please be advised that due to changes to the City's Comprehensive Plan, staff will be recommending to the Board of Commissioners that permits for both the site work, and the building (vertical construction) must be applied for concurrently and ***must be issued concurrently within that timeframe (within 6 months of approval)***.

[Comment 00065]

Patricia McNeese

This document contains comments resulting from the May 1, 2025 meeting of the Technical Review Committee.

[Comment 00066]

Patricia McNeese

We have been notified by Pinellas County staff that the project may require a County dredge and fill permit. Please coordinate with the Pinellas County Water and Navigation Authority to determine if a permit is needed. The City will need to confirm the County's requirements prior to scheduling this project for hearing.

[Comment 00067]

Patricia McNeese

The City has been notified by the Pinellas County Water and Navigation Authority that the applicant must schedule a pre-application meeting with that agency for the purpose of discussing potential requirements for a county dredge and fill permit for this project. Please contact Julee Sims or Conor Petren at 727-453-3385 or jsims@pinellas.gov.

[Sheet L-2 | Comment 00068 | CONSTRUCTION PLANS_SEALED_SIGNED.pdf]

Patricia McNeese

Pursuant to Section 4.5.4, a streetscreen of at least 3.5 feet in height is required along the Meres Blvd frontage. The streetscreen should consist of a built wall but may be substituted with a fence or hedge row by warrant at your request/indication.

Please revise Meres Blvd frontage to remove the driveway connection (see Comment 31). If a hedge row of 3.5 feet will be used to fulfill the streetscreen requirement, please show the shrub/hedge row to be a continuous 3.5 feet in height along the entire Meres Blvd frontage (except the shrubs next to the building). If Walter's viburnum will not work for this, please indicate an appropriate species that will work for that area, and add it to the landscape schedule table. Please add a note on the landscape plan pointing to the Meres Blvd frontage and stating, "streetscreen warrant requested to substitute shrub hedgerow for structural wall along the Meres Boulevard frontage." This will allow staff to process accordingly.

Public Services

[Sheet C-1 | Comment 00033 | CONSTRUCTION PLANS_SEALED_SIGNED.pdf]

Heather Estright

ADVISORY COMMENT: Please provide the estimated water and sewer flows.

This parcel shall be master metered.

This shall be an above ground reduced pressure meter assembly.

Contractor shall field verify utilities and the contractor shall complete and install both potable water and sanitary sewer taps.

The City requires 48 hours notice prior to any work completed on the mains.

Any adjustments to the utilities due to the project are the contractor’s responsibility.

All restoration is the contractor's responsibility.

Memorandum

Date: December 9, 2025
To: Mayor and Board of Commissioners
Through: Charles Rudd, City Manager
From: Renea Vincent, Planning Director
Subject: **Ordinance 2025-18**; **(1st Reading)(Quasi-Judicial)** Amending the Official Zoning Atlas for property located at 475 N Highland Avenue from A (Agricultural) and RPD (Residential Planned Development) to A (Agricultural) (Application 25-79)**(Renea Vincent, Planning and Zoning Director)**

Recommendation

Staff recommends approval of Ordinance 2025-18 amending the Official Zoning Atlas from Agricultural (A) District and Residential Planned Development (RPD) District to Agricultural (A) District.

Background

The subject property is located on the east side of North Highland Avenue approximately 500 feet north of Keystone Road. The property is currently vacant and is located within two zoning districts: Agricultural (A) District and Residential Planned Development (RPD) District. The area to be rezoned is currently under Minor Site Plan review for a minor subdivision to divide the parcel into two single family parcels.



Planning and Zoning Board Recommendation

The Planning and Zoning Board reviewed this item at their regular meeting of November 17, 2025 with a full board present. The Board voted unanimously to recommend approval of the application. There was no public comment on the application.

Funding

Not applicable.

Strategic Plan Objective

Not applicable.

CITY OF TARPON SPRINGS
PLANNING & ZONING BOARD / BOARD OF COMMISSIONERS
NOVEMBER 17,2025 / DECEMBER 9, 2025 / DECEMBER 16, 2025

STAFF REPORT, November 10, 2025

Application No. / Project Title:	25-79 / Fantasia Rezoning
Ordinance:	Draft Ordinance #2025-18
Staff:	Patricia L. McNeese, AICP Planning Supervisor
Applicant / Owner:	Peter Pensa / Patrick V. Fantasia
Property Size:	7.72 acres (includes 4.38 acres of wetlands)
Current Land Use:	Residential Very Low (RVL) and Preservation (P)
Current Zoning:	Agricultural (A) and Residential Planned Development (RPD)
Proposed Zoning:	Agricultural (A)
Location / Parcel ID:	475 N Highland Ave / Parcel ID: 08-27-16-89406-000-0080

BACKGROUND SUMMARY:
The subject property is located on the east side of North Highland Avenue approximately 500 feet north of Keystone Road. The property is currently vacant and is located within two zoning districts: Agricultural (A) District and Residential Planned Development (RPD) District. The area to be rezoned is currently under Minor Site Plan review for a minor subdivision to divide the parcel into two single family parcels.

PRELIMINARY STAFF RECOMMENDATION:
Staff recommends **approval of Ordinance 2025-18** amending the Official Zoning Atlas from Agricultural (A) District and Residential Planned Development (RPD) District to Agricultural (A) District.

CURRENT PROPERTY INFORMATION:

Use of Property:	Existing masonry, otherwise vacant
Site Features:	The site consists of uplands and wetlands that have experienced past agricultural activities.
Vehicle Access:	The parcel would be accessed from North Highland Avenue.

SURROUNDING ZONING & LAND USE:

	Zoning:	Land Use:
North:	Agricultural – Tarpon Springs	Residential Very Low and Preservation – Tarpon Springs
South:	Residential Agriculture (R-A) – Pinellas County Residential Planned Development (RPD) – City of Tarpon Springs	Residential Rural (RR) – Pinellas County Public/Semi-Public (P/SP) – Tarpon Springs
East:	Agricultural – Tarpon Springs	Residential Very Low and Preservation – Tarpon Springs
West:	Residential Agriculture (R-A) – Pinellas County	Residential Rural (RR) – Pinellas County

ZONING DISTRICT SUMMARY (EXISTING / PROPOSED): NOTE: THE SUMMARY BELOW IS PROVIDED FOR THE PORTION OF THE PROPERTY CURRENT ZONED AS RESIDENTIAL PLANNED DEVELOPMENT:

	CURRENT Residential Planned Development	PROPOSED Agricultural (A)
Residential Density (dwelling units/acre):	1 unit/acre = 8 units	1 unit/acre = 8 units
Allowable Uses:	**LDC Section 78.01**	**LDC Section 25.01**
Permitted:	Family Care Homes, Multifamily, Public Parks and Recreation Facilities, Single Family Attached, Single Family Detached, Single Family Detached Cluster, Single Family Detached Zero Lot Line, Single Family Semi-Detached	Agriculture, Emergency Service Facilities, Single Family Detached Dwellings, Public Parks and Recreation Facilities
Conditional:	Churches, Community Residential Homes, Community Services Uses, Congregate Care Facilities, Day Care Centers, Emergency Shelters and Residential Treatment Facilities, Home Occupations, Nursing Homes, Schools of General Education	Community Assembly, Communication Towers, Community Residential Homes, Excavation, Family Cares Homes, Golf Course, Home Occupations, Kennels, Light Utility Service, Schools of General Education, Schools of Special Education, Veterinary Clinics
Minimum Lot Area	10,000 square feet	30,000 square feet
Dimensional Criteria (Single Family Detached Dwelling):	**LDC Section 78.01(D)(2)**	**LDC Section 25.01(D)**
Minimum Lot Width	75 feet	200 feet
(continued)		

	CURRENT Residential Planned Development	PROPOSED Agricultural (A)
Minimum Lot Depth	n/a	n/a
Maximum Height	35 feet	35 feet
Minimum Front Yard	25 feet	30 feet
Minimum Side Yard	10 feet	20 feet
Side Street Yard	15 feet	25 feet
Rear Yard	20 feet	50 feet
Non-Residential Floor Area	0.30 (RVL), 0.10 (P)	0.30 (RVL), 0.10 (P)
Non-Residential Impervious Surface Ratio	0.60 (RVL), 0.20 (P)	0.60 (RVL), 0.20 (P)

REVIEW STANDARDS / STAFF ANALYSIS - REZONING:
Section 207.03(A) of the Tarpons Springs Comprehensive Zoning and Land Development Code (LDC) provides standards for zoning map amendments. These standards, along with planning staff's analysis are provided below:

1. **The amendment is consistent with the goals, objectives and policies of the Tarpon Springs Comprehensive Plan.**

   Staff Analysis: According to the Future Land Use Categories & Rules Table, the Residential Very Low Future Land Use Map (FLUM) category is appropriate for "large lot, very low-density residential" projects, and, to "recognize such areas as primarily well-suited for estate residential and limited agricultural uses that are consistent with the open space and natural resources of such areas." The Preservation FLUM category is used to designate "natural resource features worthy of preservation and recognize the significance of preserving such major environmental features and their functions," in this case, the wetland area of the property.

   The property is located in the Agriculture/Residential Estate "place" as depicted on the Place-Based Area Map in the 2045 Comprehensive Plan. The Place-Based Area Map recognizes unique areas, existing planned areas and stable neighborhoods, and identifies areas of change and transition where additional planning efforts should occur. [It is] intended to provide an overall guidance when applications are being reviewed for changes in future land use, rezonings, annexations and similar applications" (Introduction, Future Land Use Element). The Agriculture/Residential Estate area of the Place-Based Area Map is described as "incorporated areas in the eastern area of the City, and adjacent unincorporated areas of Pinellas County, characterized by agricultural and estate residential development patterns where large lots (minimum 0.5 – 2 acres), hobby farms, horse farms, dog kennels and a more rural lifestyle is possible" (Policy FLU 2.1.2.a) of the Future Land Use Element).

Finally, according to LDC Section 25.01(A), the proposed Agricultural Zoning District "is established to identify areas where predominantly rural and agricultural activities are normally conducted, to conserve agricultural lands and promote agricultural activity and related uses, to conserve open space and promote noncommercial recreation activities, and to protect areas from premature urban development due to the areas' rural character or lack of available public facilities" (Section 25.01(A) of the Land Development Code).

The property is located in an area of large lot and "estate" parcel properties with mixed limited agricultural activities (e.g., farm animals, kennels, and similar uses). Much of the surrounding unincorporated area is located in Pinellas County's Rural Residential Future Land Use Map category, as reflected on the City's 2045 Place-Based Area Map. The current RPD zoning designation is outdated since the planned development approved for the property was never built and is now expired. The proposed Agricultural zoning district is consistent with, and carries out, the intent of the RVL and P FLUM categories, the 2045 Place-Based Area Map and the Tarpon Springs 2045 Comprehensive Plan.

2. **The available uses to which the property may be put are appropriate to the property in question and are compatible with the existing and planned uses in the area.**

Staff Analysis: The allowable uses are listed in the table starting on page 2 of this report. The Residential Planned Development (RPD) district allows a variety of residential product, and, for additional non-commercial uses. However, the planned development approved for this property has expired. The proposed Agricultural (A) zoning would bring the entire property into one consistent zoning and would be more consistent with the surrounding area. Much of the surrounding area is unincorporated and is located in the Pinellas County Residential Rural FLUM category and Residential Agriculture zoning category.

The change in zoning would restrict the allowable housing types to single family detached dwellings only, and would allow appropriate low-impact uses on the property. This is consistent and compatible with the surrounding area built with larger estate properties and limited accessory agriculture (e.g., horses/farm animals, kennels, etc.). The applicant intends to split this property into two parcels to accommodate single family detached residences. Although the property's allocated density is eight (8) dwelling units, the minimum lot standards of the proposed Agricultural Zoning District would limit the number of parcels and consequently, the number of units, due to the configuration of the wetlands on the site. In addition, single family detached dwellings are the only residential product allowable in the Agricultural Zoning District.

3. **The amendment shall provide for efficient and orderly development considering the impact upon growth patterns and the cost to the City to provide public facilities.**

Staff Analysis: The amendment provides for efficient and orderly development by providing for an appropriate designation and level of development for the site and the area. The property is already served by City and County facilities. The City can continue to provide the relatively lower demand for services for the lower-impact level of allowable development in this area of town. The rezoning is consistent with the City's and Pinellas County's projected growth patterns for

Keystone Road and this area of town (planning horizon of both comprehensive plans is 2045). Keystone Road is designated as a Scenic Corridor by Forward Pinellas. The rezoning will continue to restrict significant increases in vehicular trip generation and similar impacts to facilities. This rezoning should have a positive impact on the City's growth patterns and on the efficiency of services provision.

4. **The amendment will not adversely impact nor exceed the capacity or the fiscal ability of the City to provide public facilities, including transportation, waste and sewer, solid waste, drainage, recreation, education, fire protection, library service and other similar public facilities. Compliance with the adopted Levels of Service standards can be demonstrated if necessary.**

   Staff Analysis: City facilities are currently serving the property with fire/emergency services and law enforcement services. The City has adequate capacity to continue these services as well as future solid waste service. The potable water service, sanitary sewer service, and existing access roads are all provided by Pinellas County.

TECHNICAL REVIEW COMMITTEE:

The Technical Review Committee (TRC) reviewed this project on October 2, 2025 for completeness and conformance to the Land Development Code. The TRC determined that the application was complete and ready for processing. TRC comments are attached.

PUBLIC CORRESPONDENCE:
The property owners within 500 feet were sent written notification in accordance with Section 206.00(J)(4) of the City of Tarpon Springs Comprehensive Zoning and Land Development Code. The notice went to 25 addresses. Notice was advertised in the *Tampa Bay Times* per Chapter 166.041, Florida Statutes and the property was posted. Staff has not received any responses to these notices.

ATTACHMENTS:
1. Slide show presentation
2. Draft Ordinance 2025-18
3. Property Survey
4. TRC Comment Report, October 2, 2025
5. Legal Public Notice

PATRICK V. FANTASIA REZONING #25-79

Planning & Zoning Board – November 17, 2025

Board of Commissioners – December 9, 2025 and December 16, 2025

SUMMARY OF REQUEST

- **#25-79 – Ordinance 2025-18** Rezoning
  - Location: 475 N. Highland Ave (East side of N. Highland Ave about 500 feet north of Keystone Road.
  - Future Land Use: Residential Very Low (RVL) and Preservation (P)
  - **ZONING**:
    - Current: Agricultural District and Residential Planned Development District
    - Proposed: Agricultural District
  - Property Features
    - 7.72 acres of property, including 4.38 acres of wetlands
    - Property is somewhat disturbed with history of agricultural activities
    - Minor Subdivision is currently in process to create two parcels for two single family detached dwellings
- **Applicant**: Peter Pensa, **Owner:** Patrick V. Fantasia

CITY OF TARPON SPRINGS
PLANNING & ZONING DEPARTMENT

LOCATION & CONTEXT



CITY OF TARPON SPRINGS
PLANNING & ZONING DEPARTMENT

LOCATION & CONTEXT – FUTURE LAND USE AND ZONING



CITY OF TARPON SPRINGS
PLANNING & ZONING DEPARTMENT

LOCATION & CONTEXT – COUNTYWIDE MAP



CITY OF TARPON SPRINGS
PLANNING & ZONING DEPARTMENT

PLACE-BASED AREA MAP – 2045 COMPREHENSIVE PLAN

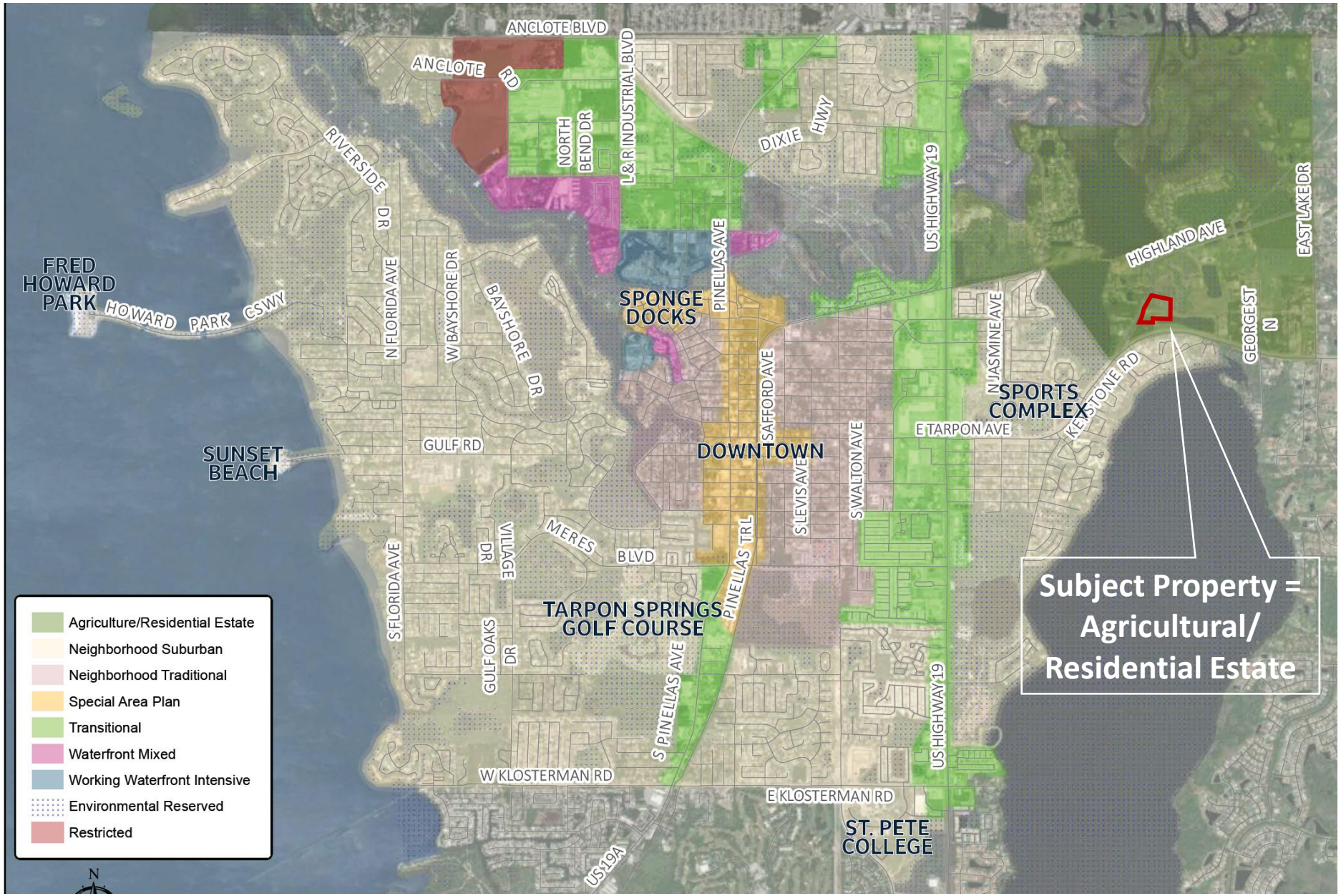

CITY OF TARPON SPRINGS
PLANNING & ZONING DEPARTMENT

SURVEY

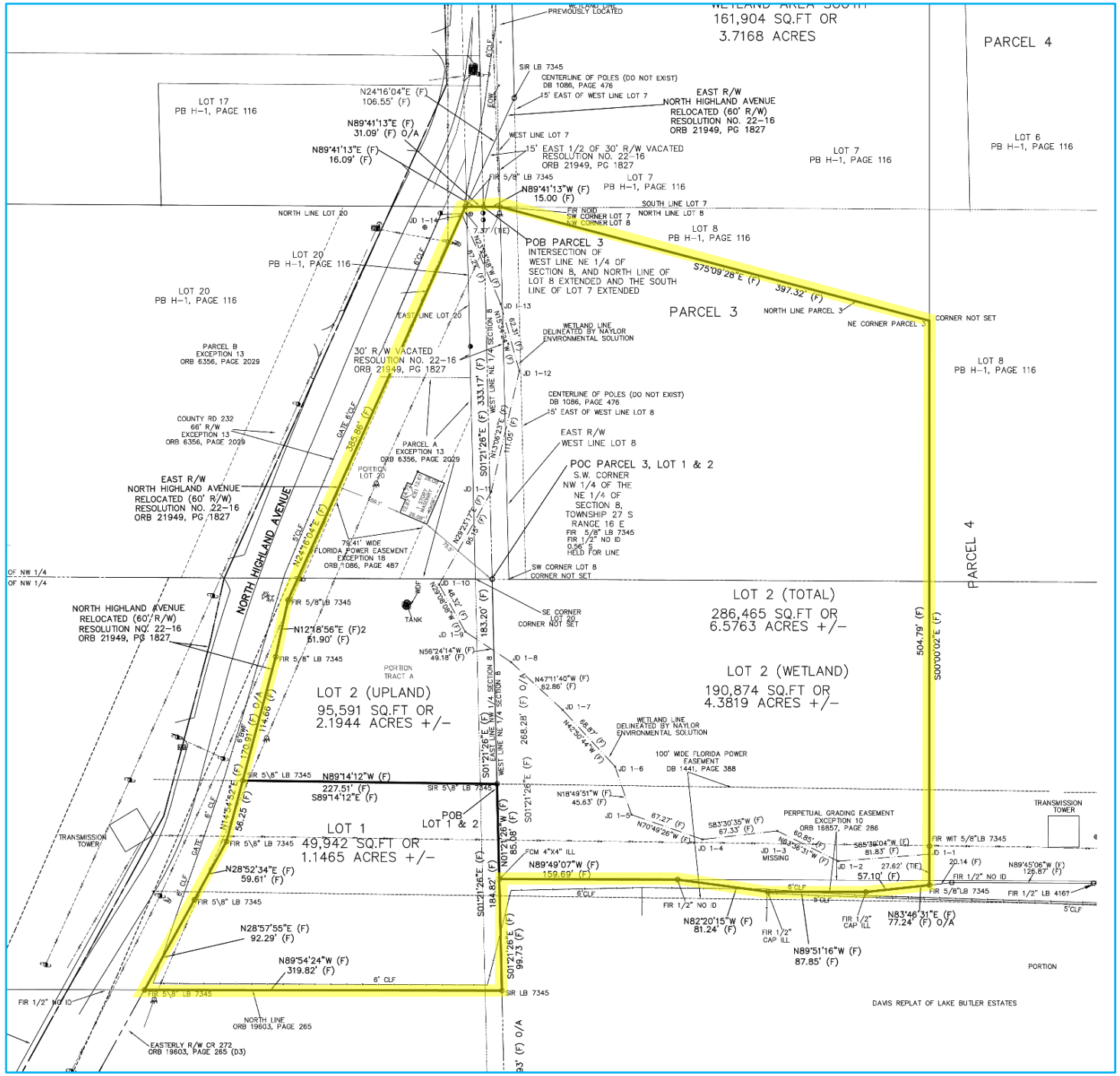
WETLAND AREA SOUTH
161,904 SQ.FT OR
3.7168 ACRES
PARCEL 4
LOT 17
PB H-1, PAGE 116
LOT 20
PB H-1, PAGE 116
LOT 7
PB H-1, PAGE 116
LOT 6
PB H-1, PAGE 116
LOT 8
PB H-1, PAGE 116
POB PARCEL 3
INTERSECTION OF
WEST LINE NE 1/4 OF
SECTION 8, AND NORTH LINE OF
LOT 8 EXTENDED AND THE SOUTH
LINE OF LOT 7 EXTENDED
PARCEL 3
POC PARCEL 3, LOT 1 & 2
S.W. CORNER
NW 1/4 OF THE
NE 1/4 OF
SECTION 8,
TOWNSHIP 27 S
RANGE 16 E
LOT 2 (TOTAL)
286,465 SQ.FT OR
6.5763 ACRES +/-
LOT 2 (WETLAND)
190,874 SQ.FT OR
4.3819 ACRES +/-
LOT 2 (UPLAND)
95,591 SQ.FT OR
2.1944 ACRES +/-
LOT 1
49,942 SQ.FT OR
1.1465 ACRES +/-
POB
LOT 1 & 2
EAST R/W
NORTH HIGHLAND AVENUE
RELOCATED (60' R/W)
RESOLUTION NO. 22-16
ORB 21949, PG 1827
NORTH HIGHLAND AVENUE
30' R/W VACATED
RESOLUTION NO. 22-16
ORB 21949, PG 1827
15' EAST 1/2 OF 30' R/W VACATED
RESOLUTION NO. 22-16
ORB 21949, PG 1827
PARCEL B
EXCEPTION 13
ORB 6356, PAGE 2029
PARCEL A
EXCEPTION 13
ORB 6356, PAGE 2029
COUNTY RD 232
66' R/W
EXCEPTION 13
ORB 6356, PAGE 2029
79.41' WIDE
FLORIDA POWER EASEMENT
EXCEPTION 18
ORB 1086, PAGE 487
100' WIDE FLORIDA POWER
EASEMENT
DB 1441, PAGE 388
PERPETUAL GRADING EASEMENT
EXCEPTION 10
ORB 16857, PAGE 286
WETLAND LINE
DELINEATED BY NAYLOR
ENVIRONMENTAL SOLUTION
CENTERLINE OF POLES (DO NOT EXIST)
DB 1086, PAGE 476
15' EAST OF WEST LINE LOT 7
15' EAST OF WEST LINE LOT 8
TRANSMISSION
TOWER
TANK
NORTH LINE PARCEL 3
NE CORNER PARCEL 3
CORNER NOT SET
SW CORNER LOT 8
CORNER NOT SET
SE CORNER
LOT 20
CORNER NOT SET
NORTH LINE LOT 20
SOUTH LINE LOT 7
NORTH LINE LOT 8
WEST LINE LOT 7
EAST LINE LOT 20
WEST LINE NE 1/4 SECTION 8
EAST LINE NW 1/4 SECTION 8
PORTION
LOT 20
PORTION
TRACT A
PORTION
DAVIS REPLAT OF LAKE BUTLER ESTATES
NORTH LINE
ORB 19603, PAGE 265
EASTERLY R/W CR 272
ORB 19603, PAGE 265 (D3)
FIR 5/8" LB 7345
FIR 1/2" NO ID
FIR 1/2" LB 4167
FIR 1/2" CAP ILL
FCM 4"X4" ILL
SIR LB 7345
SIR 5/8" LB 7345
FIR WIT 5/8"LB 7345
N89°41'13"E (F)
31.09' (F) O/A
N89°41'13"E (F)
16.09' (F)
N89°41'13"W (F)
15.00' (F)
N24°16'04"E (F)
106.55' (F)
S75°09'28"E (F)
397.32' (F)
S01°21'26"E (F)
333.17' (F)
N89°14'12"W (F)
227.51' (F)
S89°14'12"E (F)
N28°52'34"E (F)
59.61' (F)
N28°57'55"E (F)
92.29' (F)
N89°54'24"W (F)
319.82' (F)
N89°49'07"W (F)
159.69' (F)
N82°20'15"W (F)
81.24' (F)
N89°51'16"W (F)
87.85' (F)
S00°00'02"E (F)
504.79' (F)
N12°18'56"E (F)2
51.90' (F)
N56°24'14"W (F)
49.18' (F)
N47°11'40"W (F)
62.86' (F)
N42°50'14"W (F)
68.87' (F)
N18°49'51"W (F)
45.63' (F)
N70°49'26"W (F)
67.27' (F)
S83°30'35"W (F)
67.33' (F)
S85°36'04"W (F)
81.83' (F)
N83°46'31"E (F)
77.24' (F) O/A
N89°45'06"W (F)
126.87' (F)
N01°21'26"W (F)
85.08' (F)
S01°21'26"E (F)
184.82' (F)
S01°21'26"E (F)
99.73' (F)
N13°36'23"E (F)
111.05' (F)
N01°21'26"W (F)
268.28' (F) O/A
N14°45'59"E (F)
170.69' (F) O/A
114.66' (F)
395.86' (F)
183.20' (F)
84.75' (F)
N89°23'17"E (F)
N24°16'04"E (F)
N13°36'23"E (F)
56.25' (F)
20.14' (F)
57.10' (F)
27.62' (TIE)
7.37' (TIE)
JD 1-1
JD 1-2
JD 1-3
MISSING
JD 1-4
JD 1-5
JD 1-6
JD 1-7
JD 1-8
JD 1-9
JD 1-10
JD 1-11
JD 1-12
JD 1-13
JD 1-14
6' CLF
5' CLF
GATE 6' CLF
WDF
OF NW 1/4
OF NW 1/4
NORTH HIGHLAND AVENUE
RELOCATED (60' R/W)
RESOLUTION NO. 22-16
ORB 21949, PG 1827
PARCEL 4

REVIEW CRITERIA – REZONING

1. **Comprehensive Plan Consistency**

   The proposed Agricultural Zoning for this area is consistent with the Future Land Use Map, the Place-Based Area Map and the 2045 Comprehensive Plan.

2. **Appropriate and Compatible Uses**

   The available uses are appropriate and compatible with the surrounding area. The zoning change will scale allowable uses down to a lower impact level consistent with the estate parcel and limited agricultural activities predominant in the area. Note that single family detached dwellings are the only housing product type allowable in the Agricultural Zoning District.

3. **Provide for Efficient and Orderly Development**

   The Agricultural designation is consistent with the long-term growth pattern in this semi-rural area, as envisioned by both the City and the Pinellas County 2045 Comprehensive Plans.

4. **Public Facilities Capacity and Levels of Service**

   The property is served with City fire/emergency services and law enforcement services. The water and sewer utilities, and the N. Highland Ave. roadway are under jurisdiction of Pinellas County. The City has the capacity and fiscal ability to continue to serve the property. Development allowable in the Agricultural District on this property is expected to be able to demonstrate compliance with Level of Service standards.

PRELIMINARY STAFF RECOMMENDATION

#25-79 - ***Approval*** of **Ordinance 2025-18**, Rezoning from Agricultural (A) District and Residential Planned Development (RPD) District, to, Agricultural (A) District.

Public Notice Provided – The request was publicly noticed. No responses to notice were received.

PLANNING AND ZONING BOARD RECOMMENDATION

#25-79 - The Planning and Zoning Board reviewed this item at their regular meeting of November 17, 2025 with a full board present. The Board voted unanimously to recommend approval of the application. There was no public comment on the application.

ORDINANCE 2025-18

AN ORDINANCE OF THE CITY OF TARPON SPRINGS, FLORIDA, AMENDING THE OFFICIAL ZONING ATLAS FOR 7.72 ACRES, MORE OR LESS, OF REAL PROPERTY LOCATED AT 475 N HIGHLAND AVE, ON THE EAST SIDE OF N HIGHLAND AVE, APPROXIMATELY 500 FEET NORTH OF THE INTERSECTION OF N HIGHLAND AVE AND KEYSTONE ROAD (APPLICATION 25-79), FROM AGRICULTURAL DISTRICT (A) AND RESIDENTIAL PLANNED DEVELOPMENT DISTRICT (RPD) TO AGRICULTURAL DISTRICT (A); PROVIDING FOR FINDINGS; AND PROVIDING AN EFFECTIVE DATE.

WHEREAS, the property owner of record of said parcel has requested to amend the Official Zoning Atlas designation from Agricultural (A) District and Residential Planned Development (RPD) to Agricultural (A) District; and

WHEREAS, the Agricultural (A) District is consistent with the property's existing Future Land Use Map categories of RVL (Residential Very Low) and Preservation (P); and

WHEREAS, permitted uses within the Agricultural District are compatible with the surrounding and existing land uses; and

WHEREAS, the Planning and Zoning Board conducted a public hearing on this Zoning Atlas amendment Ordinance on November 17, 2025; and

WHEREAS, published legal notice of this Ordinance has been provided pursuant to the requirements of Chapter 166.041, F.S. and Section 206 of the Tarpon Springs Comprehensive Zoning and Land Development Code.

NOW, THEREFORE, BE IT ORDAINED BY THE BOARD OF COMMISSIONERS OF THE CITY OF TARPON SPRINGS, FLORIDA:

Section 1. FINDINGS

1. That the Board of Commissioners finds that this Ordinance is consistent with Chapter 163, Part II, Florida Statutes.

2. The Board of Commissioners finds that this amendment to the Agricultural (A) District is appropriate.

Section 2. ZONING ATLAS AMENDMENT

That the Official Zoning Atlas of the City of Tarpon Springs is hereby amended for the property described in Exhibit A.

Section 3. SEVERABILITY

If any section, subsection, sentence, clause or phrase of the Ordinance is determined for any reason to be illegal, invalid, or unconstitutional by a court or regulatory body of competent jurisdiction, then the offending provision shall be deemed severable, shall not affect the validity of the remaining portions hereof, and the remainder shall continue in full force and effect.

Section 4. REPEAL

All other ordinances or resolutions which conflict wholly or in part with the provisions of this ordinance, are hereby repealed effective the date this ordinance becomes effective.

Section 5. EFFECTIVE DATE

This Ordinance shall be effective upon approval in the manner provided by law.

Ordinance 2025-18, Exhibit A:

A PARCEL OF LAND BEING A PORTIONS OF LOTS 8 AND 20 AND A PORTION OF THE 30 FOOT RIGHT OF WAY (VACATED BY RESOLUTION NO. 22–16 IN OFFICIAL RECORD BOOK 21949, PAGE 1827) AS SHOWN ON THE PLAT OF TAMPA TARPON SPRINGS LAND COMPANY AS RECORDED IN PLAT BOOK 1, PAGE 116 OF THE PUBLIC RECORDS OF HILLSBOROUGH COUNTY, FLORIDA, OF WHICH PINELLAS COUNTY WAS FORMERLY A PART AND A PORTION OF TRACT "A" AS SHOWN IN THE PLAT OF DAVIS REPLAT IN SECTION 8, TOWNSHIP 27 SOUTH, RANGE 16 EAST AS RECORDED IN PLAT BOOK 23, PAGE 29 OF THE PUBLIC RECORDS OF PINELLAS COUNTY , FLORIDA AND LYING IN A PORTION OF SECTION 8, TOWNSHIP 27 SOUTH, RANGE 16 EAST, PINELLAS COUNTY, FLORIDA, BEING MORE PARTICULARLY DESCRIBED AS FOLLOWS:

COMMENCE AT THE SOUTHWEST CORNER OF THE NORTHWEST 1/4 OF THE NORTHEAST 1/4 SECTION 8, TOWNSHIP 27 SOUTH, RANGE 16 EAST; THENCE NORTH 01°21'26" WEST ALONG THE WEST LINE OF THE NORTHEAST 1/4 OF SAID SECTION 8 FOR 333.17 FEET TO THE INTERSECTION OF THE NORTH LINE EXTENDED FOR LOT 8 AND SOUTH LINE EXTENDED FOR LOT 7 SHOWN ON THE PLAT OF TAMPA TARPON SPRINGS LAND COMPANY AS RECORDED IN PLAT BOOK H–1, PAGE 116 OF THE PUBLIC RECORDS OF HILLSBOROUGH COUNTY, FLORIDA, OF WHICH PINELLAS COUNTY WAS FORMERLY A PART AND TO THE POINT OF BEGINNING; THENCE SOUTH 89°41'13" EAST FOR 15.01 FEET ALONG SAID LINE EXTENDED TO THE NORTHWEST CORNER OF SAID LOT 8; THENCE SOUTH 75°09'28" EAST ALONG THE SOUTH LINE OF PARCEL 2 FOR 397.32 FEET TO INTERSECT THE WEST LINE OF PARCEL 4; THENCE SOUTH 00°00'02" EAST ALONG THE WEST LINE OF SAID PARCEL 4 FOR 504.79 FEET TO INTERSECT THE NORTH LINE OF THE PINELLAS COUNTY TRACT AS DESCRIBED IN OFFICIAL RECORDS BOOK 13138, PAGE 1943 OF THE PUBLIC RECORDS OF PINELLAS COUNTY , FLORIDA; THENCE ALONG THE SAID NORTH LINE FOR THE FOLLOWING FOUR (4) COURSES: (1) SOUTH 83°46'31" WEST FOR 57.10 FEET; (2) NORTH 89°51'16" WEST FOR 87.85 FEET; (3) NORTH 82°20'15" WEST FOR 81.24 FEET; (4) NORTH 89°49'07" WEST FOR 159.69 FEET TO INTERSECT THE AFORESAID WEST LINE NORTHEAST 1/4 OF SAID SECTION 8; THENCE SOUTH 01°21'26" EAST ALONG SAID WEST LINE FOR 99.74 FEET TO THE NORTH LINE OF THE PARCEL DESCRIBED IN OFFICIAL RECORDS BOOK 19603, PAGE 265 OF THE AFORESAID PUBLIC RECORDS; THENCE NORTH 89°54'24" WEST ALONG SAID NORTH LINE FOR 319.82 FEET TO INTERSECT THE EASTERN RIGHT OF WAY OF PROPOSED NORTH HIGHLAND AVENUE RELOCATION; THENCE ALONG SAID EASTERN RIGHT OF WAY THE FOLLOWING FIVE (5) COURSES: (1) NORTH 28°57'55" EAST FOR 92.27 FEET; (2) NORTH 28°52'34" EAST FOR 59.61 FEET; (3) NORTH 14°54'52" EAST FOR 170.91 FEET;(4) NORTH 12°18'56" EAST FOR 51.90 FEET; (5) NORTH 24°16'04" EAST FOR 385.86 FEET TO INTERSECT OF THE AFORESAID EXTENSIONS OF THE NORTH LINE OF LOT 8 AND SOUTH LINE OF LOT 7; THENCE SOUTH 89°41'13" EAST ALONG SAID LINE EXTENDED FOR 16.09 FEET TO THE POINT OF BEGINNING.

CONTAINING 336,407 SQUARE FEET OR 7.7228 ACRES, MORE OR LESS.

4904 Eisenhower Boulevard
Suite 350
Tampa, FL 33634
727. 789. 9500

Project Summary
475 N Highland Ave Rezoning & Minor Site Plan (Lot Split)

Parcel ID No. 08-27-16-89406-000-0080

Description of Project/Request:

The property owner, Patrick Fantasia, is requesting rezoning and minor site plan approval, in order to split the 7.72± acre property into two (2) single-family residential lots.

Lot 1 would be 1.1465+/- acres and Lot 2 would be 6.5762+/- acres. The boundary and jurisdictional wetland survey and the minor site plan are attached and depict the proposed lot split.

The property is currently vacant, except for a 1,048± sq.ft. garage which was built in 1979 according to Pinellas County Property Appraiser's Office records.

The property has split future land use map designations of RVL (Residential Very Low) and P (Preservation).

The property currently has split zoning of A (agricultural District) and RPD (Residential Planned Development). The property owner is requesting the entire property be rezoned to A (Agricultural District).

Site Access:

N Highland Ave is Pinellas County right-of-way. Each lot will require a residential driveway permit for their respective connections. The specific driveway locations will be determined at the time of building / driveway permit application to the city and county.

Utilities:

The property is located within Pinellas County Utilities service area.

There is an 8-inch HDPE water main on the east side of N Highland Ave, adjacent to the property frontage. There is an existing fire hydrant in the right-of-way, approximately 115 feet south of the garage on the property. The individual water tap / meter locations will be determined at the time of building / utility permit application to the city and county.

Sanitary sewer service is not currently available to serve the site. Individual septic systems are proposed for each lot. The individual septic system locations will be determined at the time of building / septic permit application to the city and county. Pursuant to Tarpon Springs Comprehensive Zoning and Land Development Code Sec. 136.02, the individual septic systems shall be abandoned in accordance with the requirements of the Pinellas County Health Department, and any other applicable regulations when service becomes available.

Wetlands:

The jurisdictional wetland boundaries have been flagged by Naylor Environmental Services and surveyed by AVID / McAdams. The environmental resource permit (ERP) application is currently in review with FDEP. The boundary and jurisdictional wetland survey is attached. The property is comprised of 3.5109 acres of upland area and 4.2120 acres of wetland area.

Thank you in advance for your consideration on this rezoning and lot split. If you have any questions, or need any additional information please contact me directly at 727.234.8015 (cell) or at ppensa@mcadamsco.com.

Respectfully,

Peter Pensa, AICP
Director, Planning + Entitlement
AVID Group® | McAdams
Phone: 727.234.8015
ppensa@mcadamsco.com
www.mcadamsco.com

SURVEYOR'S REPORT

MAP OF BOUNDARY AND WETLAND JURISDICTIONAL SURVEY :

SEE SHEET 2 OF 2 FOR MAP OF SURVEY. THE MAP AND REPORT ARE NOT FULL AND COMPLETE WITHOUT THE OTHER.

LEGAL DESCRIPTION:
(SEE DATA SOURCE 2)

LEGAL DESCRIPTION: PARCEL 3– REVISED

A PARCEL OF LAND BEING A PORTIONS OF LOTS 8 AND 20 AND A PORTION OF THE 30 FOOT RIGHT OF WAY (VACATED BY RESOLUTION NO. 22–16 IN OFFICIAL RECORD BOOK 21949, PAGE 1827) AS SHOWN ON THE PLAT OF TAMPA TARPON SPRINGS LAND COMPANY AS RECORDED IN PLAT BOOK 1, PAGE 116 OF THE PUBLIC RECORDS OF HILLSBOROUGH COUNTY, FLORIDA, OF WHICH PINELLAS COUNTY WAS FORMERLY A PART AND A PORTION OF TRACT "A" AS SHOWN IN THE PLAT OF DAVIS REPLAT IN SECTION 8, TOWNSHIP 27 SOUTH, RANGE 16 EAST AS RECORDED IN PLAT BOOK 23, PAGE 29 OF THE PUBLIC RECORDS OF PINELLAS COUNTY , FLORIDA AND LYING IN A PORTION OF SECTION 8, TOWNSHIP 27 SOUTH, RANGE 16 EAST, PINELLAS COUNTY, FLORIDA, BEING MORE PARTICULARLY DESCRIBED AS FOLLOWS:

COMMENCE AT THE SOUTHWEST CORNER OF THE NORTHWEST 1/4 OF THE NORTHEAST 1/4 SECTION 8, TOWNSHIP 27 SOUTH, RANGE 16 EAST; THENCE NORTH 01°21'26" WEST ALONG THE WEST LINE OF THE NORTHEAST 1/4 OF SAID SECTION 8 FOR 333.17 FEET TO THE INTERSECTION OF THE NORTH LINE EXTENDED FOR LOT 8 AND SOUTH LINE EXTENDED FOR LOT 7 SHOWN ON THE PLAT OF TAMPA TARPON SPRINGS LAND COMPANY AS RECORDED IN PLAT BOOK H–1, PAGE 116 OF THE PUBLIC RECORDS OF HILLSBOROUGH COUNTY, FLORIDA, OF WHICH PINELLAS COUNTY WAS FORMERLY A PART AND TO THE POINT OF BEGINNING; THENCE SOUTH 89°41'13" EAST FOR 15.01 FEET ALONG SAID LINE EXTENDED TO THE NORTHWEST CORNER OF SAID LOT 8; THENCE SOUTH 75°09'28" EAST ALONG THE SOUTH LINE OF PARCEL 2 FOR 397.32 FEET TO INTERSECT THE WEST LINE OF PARCEL 4; THENCE SOUTH 00°00'02" EAST ALONG THE WEST LINE OF SAID PARCEL 4 FOR 504.79 FEET TO INTERSECT THE NORTH LINE OF THE PINELLAS COUNTY TRACT AS DESCRIBED IN OFFICIAL RECORDS BOOK 13138, PAGE 1943 OF THE PUBLIC RECORDS OF PINELLAS COUNTY , FLORIDA; THENCE ALONG THE SAID NORTH LINE FOR THE FOLLOWING FOUR (4) COURSES: (1) SOUTH 83°46'31" WEST FOR 57.10 FEET; (2) NORTH 89°51'16" WEST FOR 87.85 FEET; (3) NORTH 82°20'15" WEST FOR 81.24 FEET; (4) NORTH 89°49'07" WEST FOR 159.69 FEET TO INTERSECT THE AFORESAID WEST LINE NORTHEAST 1/4 OF SAID SECTION 8; THENCE SOUTH 01°21'26" EAST ALONG SAID WEST LINE FOR 99.74 FEET TO THE NORTH LINE OF THE PARCEL DESCRIBED IN OFFICIAL RECORDS BOOK 19603, PAGE 265 OF THE AFORESAID PUBLIC RECORDS; THENCE NORTH 89°54'24" WEST ALONG SAID NORTH LINE FOR 319.82 FEET TO INTERSECT THE EASTERN RIGHT OF WAY OF PROPOSED NORTH HIGHLAND AVENUE RELOCATION; THENCE ALONG SAID EASTERN RIGHT OF WAY THE FOLLOWING FIVE (5) COURSES: (1) NORTH 28°57'55" EAST FOR 92.27 FEET; (2) NORTH 28°52'34" EAST FOR 59.61 FEET; (3) NORTH 14°54'52" EAST FOR 170.91 FEET;(4) NORTH 12°18'56" EAST FOR 51.90 FEET; (5) NORTH 24°16'04" EAST FOR 385.86 FEET TO INTERSECT OF THE AFORESAID EXTENSIONS OF THE NORTH LINE OF LOT 8 AND SOUTH LINE OF LOT 7; THENCE SOUTH 89°41'13" EAST ALONG SAID LINE EXTENDED FOR 16.09 FEET TO THE POINT OF BEGINNING.

CONTAINING 336,407 SQUARE FEET OR 7.7228 ACRES, MORE OR LESS.

DATA SOURCES:

1. BEARINGS ARE BASED UPON THE WEST LINE OF THE NORTHEAST 1/4 OF SECTION 8 BEING N 01°21'26"W AS ESTABLISHED BASED ON STATE PLANE COORDINATES WEST ZONE AND IS SHOWN ON THE MAP OF SURVEY.

2. THIS SURVEY WAS PREPARED WITH THE BENEFIT OF A COMMITMENT FOR TITLE INSURANCE, PREPARED BY FIRST AMERICAN TITLE INSURANCE COMPANY, FILE NUMBER 2061–4461877 COMMITMENT DATE: SEPTEMBER 2, 2019 @ 8:00 A.M.
THE LEGAL DESCRIPTION SHOWN HEREON WAS PREPARED BY THE SURVEYOR AT CLIENTS REQUEST AND NOT AS IT APPEARS IN SAID COMMITMENT.

3. SOURCE OF EASEMENT INFORMATION BEING SAID COMMITMENT REFERENCED IN DATA SOURCES 2.

4. STATE PLANE COORDINATES ARE BASED FDOT FLORIDA PERMANENT REFERENCE NETWORK THEY WERE ESTABLISHED WITH GPS USING MULTIPLE OBSERVATIONS CONSISTING OF MORE THAN THREE MINUTES AT EACH POINT.

5. THE RECORD PLAT OF TAMPA & TARPON SPRINGS LAND COMPANY, AS RECORDED IN PLAT BOOK H–1, PAGE 116 OF THE PUBLIC RECORDS OF HILLSBOROUGH COUNTY, FLORIDA, OF WHICH PINELLAS COUNTY WAS FORMERLY A PART WAS UTILIZED IN THE PREPARATION OF THIS SURVEY.

6. THE RECORD PLAT OF SALT LAKE VIEW, AS RECORDED IN PLAT BOOK 17, PAGE 5 OF THE PUBLIC RECORDS OF PINELLAS COUNTY, FLORIDA, WAS UTILIZED IN THE PREPARATION OF THIS SURVEY.

7. THE RECORD PLAT OF DAVIS REPLAT IN SECTION 8, AS RECORDED IN PLAT BOOK 23, PAGE 29 OF THE PUBLIC RECORDS OF PINELLAS COUNTY, FLORIDA, WAS UTILIZED IN THE PREPARATION OF THIS SURVEY.

8. THE RECORD PLAT OF RIVERSIDE, AS RECORDED IN PLAT BOOK 94, PAGE 85 OF THE PUBLIC RECORDS OF PINELLAS COUNTY, FLORIDA, WAS UTILIZED IN THE PREPARATION OF THIS SURVEY.

9. THE RECORD PLAT OF SAVANNAH POINTE, AS RECORDED IN PLAT BOOK 116, PAGE 35 OF THE PUBLIC RECORDS OF PINELLAS COUNTY, FLORIDA, WAS UTILIZED IN THE PREPARATION OF THIS SURVEY.

10. THE SPECIFIC PURPOSE SURVEY OF KEYSTONE ROAD FROM U.S.HIGHWAY 19 NORTH TO EAST LAKE ROAD PROVIDED BY PINELLAS COUNTY PUBLIC WORKS DIVISION OF SURVEY AND MAPPING STATE OF FLORIDA WAS UTILIZED IN THE PREPARATION OF THIS SURVEY.

11. THE TOPOGRAPHIC SURVEY OF NORTH HIGHLANDS AVENUE DRAINAGE INPROVEMENTS FROM MORROW ROAD TO RIVERSIDE RIDGE ROAD PROVIDED BY PINELLAS COUNTY PUBLIC WORKS DIVISION OF SURVEY AND MAPPING STATE OF FLORIDA WAS UTILIZED IN THE PREPARATION OF THIS SURVEY.

SURVEYOR'S NOTES:

1. USE OF THIS SURVEY BY ANYONE OTHER THAN THOSE PREPARED FOR/CERTIFIED TO, WILL BE THE RE–USERS SOLE RISK WITHOUT LIABILITY TO THE SURVEYOR.

2. THE SIGNING PROFESSIONAL LAND SURVEYOR IS NOT RESPONSIBLE FOR ADDITIONAL EASEMENTS AND/OR RESTRICTIONS AFFECTING THIS PROPERTY THAT WERE NOT PROVIDED BY THE TITLE COMPANY REFERENCED IN DATA SOURCES 2.

3. THE LOCATIONS OF THE UNDERGROUND UTILITIES AND / OR THEIR APPURTENANCES WERE PERFORMED BY A FIELD SURVEY AND ONLY LOCATED AS SHOWN ON THE FACE OF THE SURVEY. ONLY THE UNDERGROUND UTILITIES AND/OR THEIR APPURTENANCES WHICH WERE VISIBLE FROM GROUND LEVEL TO THE SURVEYOR ON THE ACTUAL DAY OF THE FIELD SURVEY WERE LOCATED. NO EXCAVATIONS OR SUBSURFACE WORK EFFORTS OF ANY KIND WERE PERFORMED BY THE SURVEYOR TO VERIFY THE EXISTENCE OF ANY UNDERGROUND UTILITIES AND/OR THEIR APPURTENANCES. THE SURVEYOR MAKES NO GUARANTEE THAT THE UNDERGROUND UTILITIES AND/OR THEIR APPURTENANCES SHOWN COMPRISE ALL SUCH UTILITIES IN THE AREA, EITHER IN SERVICE OR ABANDONED.

4. PRINTED DIMENSIONS SHOWN ON THE SURVEY SUPERSEDE SCALED DIMENSIONS. THERE MAY BE ITEMS DRAWN OUT OF SCALE TO GRAPHICALLY SHOW THEIR LOCATION.

5. UNDERGROUND FOUNDATIONS AND THEIR LOCATIONS HAVE NOT BEEN DETERMINED.

6. IRRIGATION EQUIPMENT AND/OR THEIR APPURTENANCES HAVE NOT BEEN LOCATED UNLESS OTHERWISE SHOWN HEREON.

7. FIELD WORK WAS COMPLETED ON 06/18/25.

8. NO INFORMATION FOR THE ADJOINING PROPERTY OWNERS WAS PROVIDED TO THE SURVEYOR.

9. CALCULATED (C) GEOMETRY SHOWN HEREON WAS CALCULATED USING FIELD LOCATED POINTS.

10. ADDITIONS OR DELETIONS TO SURVEY MAPS OR REPORTS BY OTHER THAN THE SIGNING PARTY OR PARTIES IS PROHIBITED WITHOUT WRITTEN CONSENT OF THE SIGNING PARTY OR PARTIES.

11. ANGULAR AND/OR DIMENSIONAL DISCREPANCIES BETWEEN THE LEGAL DESCRIPTION(S) AND THE FIELD LOCATED OCCUPATION BOUNDARY CORNERS, AND BOUNDARY CORNERS WITH MULTIPLE BOUNDARY MONUMENTS ALONG WITH THEIR CORRESPONDING QUADRANT DIRECTIONAL MISSES, ARE SHOWN ON MAP OF SURVEY.

12. THE SUBJECT PROPERTY LIES WITHIN FLOOD ZONE AE, BASE FLOOD ELEVATION: 9', PER FLOOD INSURANCE RATE MAP, COMMUNITY NUMBER 120259, PANEL NUMBERS 0036 AND 0038, SUFFIX C , MAP NUMBER 12103C0036G AND 1210C0038G, EFFECTIVE DATE SEPTEMBER 3, 2003

14. THE WETLAND DECLINATION WAS ESTABLISHED BY NAYLOR ENVIRONMENTAL AND FIELD LOCATED BY AVID/MCADAMS 6/17/25

EASEMENTS/RIGHT–OF–WAYS:

1. THERE MAY BE EASEMENTS AND/OR RESTRICTIONS AFFECTING THIS PROPERTY THAT MAY BE FOUND IN THE PUBLIC RECORDS OF THIS COUNTY.

THE FOLLOWING ARE PER SCHEDULE B – SECTION 2 OF THE COMMITMENT REFERENCED IN DATA SOURCE 2

1. Defects, liens, encumbrances, adverse claims or other matters, if any, created, first appearing in the public records or attaching subsequent to the Effective Date but prior to the date the proposed insured acquires for value of record the estate or interest or mortgage thereon covered by this Commitment.
RESPONSE TO ITEM 1: NON SURVEY ITEM

2. Any rights, interests, or claims of parties in possession of the land not shown by the public records.
RESPONSE TO ITEM 2: NON SURVEY ITEM

3. Any encroachment, encumbrance, violation, variation or adverse circumstance affecting the Title that would be disclosed by an accurate and complete land survey of the land.
RESPONSE TO ITEM 3: SEE MAP OF SURVEY

4. Any lien, for services, labor, or materials in connection with improvements, repairs or renovations provided before, on, or after Date of Policy, not shown by the public records.
RESPONSE TO ITEM 4: NON SURVEY ITEM

5. Any dispute as to the boundaries caused by a change in the location of any water body within or adjacent to the land prior to Date of Policy, and any adverse claim to all or part of the land that is, at Date of Policy, or was previously under water.
RESPONSE TO ITEM 5: NON SURVEY ITEM

6. Taxes or special assessments not shown as liens in the public records or in the records of the local tax collecting authority, at Date of Policy.
RESPONSE TO ITEM 6: NON SURVEY ITEM

7. Any minerals or mineral rights leased, granted or retained by current or prior owners.
RESPONSE TO ITEM 7: NON SURVEY ITEM

8. Taxes and assessments for the year 2019 and subsequent years, which are not yet due and payable.
RESPONSE TO ITEM 8: NON SURVEY ITEM

9. Terms and conditions of any existing unrecorded lease(s), and all rights of lessee(s) and any parties claiming through the lessee(s) under the lease(s).
RESPONSE TO ITEM 9: NON SURVEY ITEM

10. Perpetual Grading Easement as set forth in instrument recorded in Book 16852, Page 286.
RESPONSE TO ITEM 10: THIS EFFECTS NEW PARCEL 3 AND 4– EASEMENT IS SHOWN ON MAP OF SURVEY FOR NEW PARCEL 3. DOES NOT EFFECT NEW PARCEL 2

11. Easement to Florida Power Corporation recorded in Book 2153, Page 327
RESPONSE TO ITEM 11: THIS DOES NOT EFFECT NEW PARCELS 2 OF 3. EFFECTS NEW PARCEL 4 NOT SHOWN ON MAP OF SURVEY
.
12. Ingress Egress Easement recorded in Book 4542, Page 1460.
RESPONSE TO ITEM 12: THESE EASEMENTS DO NOT EFFECT NEW PARCELS 2 OR 3. EASEMENTS ARE SHOWN ON MAP OF SURVEY FOR NEW PARCEL 2

13. Terms and Conditions of Water Easement Agreement recorded in Book 6356, Page 2029. (affects Lot 20)
RESPONSE TO ITEM 13: PARCEL A IS WITHIN NEW PARCEL 3, PARCEL B IS IN A PORTION OF NEW PARCEL 3. COUNTY ROAD 272 IS ALSO SHOWN AS DESCRIBED IN THIS DEED. THIS DOES NOT EFFECT NEW PARCEL 2

14. Ingress Egress Easement as reserved in Book 14199, Page 1609. (affects Parcel 4)
RESPONSE TO ITEM 14: THIS EASEMENT DOES NOT EFFECT NEW PARCEL 2 OR 3 . IT IS IN NEW PARCEL 4 AND NOT SHOWN ON MAP OF SURVEY

15. Easement to Florida Power Corporation recorded in Deed Book 1536, Page 421. (affects Parcel 1)
RESPONSE TO ITEM 15: THIS DOES NOT EFFECT ANY OF THE PARCELS .

16. Easement to Florida Power Corporation recorded in Deed Book 1441, Page 385. RESPONSE TO ITEM 16: THIS DOES NOT EFFECT ANY OF THE NEW PARCELS OUR PARCELS ARE ALL IN THE NE 1/4 OF SECTION 8

17. Easement recorded in Deed Book 1086, Page 516.
RESPONSE TO ITEM 17: THIS DOCUMENT IS ILLEGIBLE AND NOT BE PLOTTED

18. Easement to Florida Power Corporation recorded in Deed Book 1086, Page 487. (affects Parcel 5)
RESPONSE TO ITEM 18: THE EASEMENT IS SHOWN ON THE MAP OF SURVEY AND EFFECTS NEW PARCEL 3 ONLY.

19. Conditions and reservations contained in that Special Warranty Deed recorded in O.R. Book 20442, Page 1568.
RESPONSE TO ITEM 19: NEW PARCELS 2 AND 3 ARE EFFECTED BY THESE CONDITIONS. BLANKET AND NOT PLOTTABLE.

20. Easement for Use of Pond recorded in Book 20448, Page 1478.
RESPONSE TO ITEM 20: THIS DOES NOT EFFECTS NEW PARCELS 2 OR 3

21. That certain mortgage from Charles Robert Smith and Renee Lynne Letosky–Smith, husband and wife to MERS as nominee for Angel Oak Mortgage Solutions LLC, recorded March 04, 2019 in Book 20448, Page 1465, in the original principal amount of $1,350,000.00, and the terms and conditions thereof.
RESPONSE TO ITEM 21: NON SURVEY ITEM

PREPARED FOR:

PATRICK FANTASIA

CERTIFIED TO:

PATRICK FANTASIA

SURVEYOR IN RESPONSIBLE CHARGE:

JOHN L. WABY
PROFESSIONAL LAND SURVEYOR
LICENSE NUMBER PLS 4270
STATE OF FLORIDA

SYMBOLS LEGEND

= Aerial Target
ARV = Air Release Valve
= Bench Mark
BFP = Back Flow Preventor
CPS = Cable TV Paint Stripe
CB = Cable TV Box
= Cable TV Pedestal
= Communications Manhole
= Concrete Light Pole
= Concrete Post
= Concrete Utility Pole
= Drainage Manhole
EB = Electric Box
= Electric Manhole
= Electric Meter
TR = Electric Transformer
= FPC Pedestal
= Fire Hydrant
= Flag Pole
GAS = Gas Line Marker
= Gas Filler Cap
GV = Gas Valve
GM = Gas Meter Box
GLPS = Gas Line Paint Stripe
= Gas Vent
= Gopher Tortoise Hole
= Grate Inlet
= Guy Wire
= Handicapped
= Light Pole
MB = Mail Box
= Metal Post
= Monitor Well
= Parking Meter
PPS = Power Paint Stripe
RWPS = Reclaimed Water Paint Stripe
RW = Reclaimed Water Box
RW = Reclaimed Water Valve
= Sanitary Sewer Manhole
= Sanitary Cleanout
SANPS = Sanitary Sewer Paint Stripe
= Section Corner
= Siamese Connection
= Sign
SCB = Sprinkler Control Box
= Sprinkler Head
= Steel Transmission Pole
STMPS = Storm Water Paint Stripe
= Telephone Pedestal
= Telephone Manhole
TPS = Telephone Paint Stripe
TEL = Telephone Marker
SB = Traffic Signal Box
TP = Traffic Signal Pole
UC = Underground Cable Marker
VB = Verizon Box
VM = Verizon Marker
= Water Blow Off Valve
WLM = Water Line Marker
WPS = Water Line Paint Stripe
W = Water Meter
WV = Water Valve
= Well
= Wood Utility Pole
= Wood Light Pole
= Wood Post/Pole
= Wood Transmission Pole

x 25.25' = Point of Elevation
25.2' = Calculated Dimension from Structure to Boundary / Right–of–Way Line

= FOUND 5/8" IRON ROD WITH CAP "AVID LB 7345" (UNLESS OTHERWISE NOTED)
= SIR, SET 5/8" IRON ROD WITH CAP "AVID LB 7345" (UNLESS OTHERWISE NOTED)
= FCM, FOUND CONCRETE MONUMENT 4"X4" WITH DISK
= SCM PRM, SET CONCRETE MONUMENT 4"X4" WITH DISK MARKED "PRM LB 7345" (UNLESS OTHERWISE NOTED)
= SN&D PRM, SET NAIL AND DISK "PRM LB 7345" (UNLESS OTHERWISE NOTED)
= PCP, SET NAIL AND DISK "PCP LB 7345" (UNLESS OTHERWISE NOTED)
Δ = CENTRAL ANGLE

ABBREVIATIONS LEGEND

AC = Acres
A/C = Air Conditioner
ADW = Asphalt Driveway
ARC = Arc Distance (Length)
ASPH = Asphalt
BC = Back of Curb
BCCM = Board of County Commissioners Minutes Book
BFPD = Back Flow Prevention Device
BLDG = Building
BNDY = Boundary
BWF = Barb Wire Fence
(C) = Calculated Data
C/C = Covered Concrete
CB = Chord Bearing
CCCL = Coastal Construction Control Line
CCR = Certified Corner Record
CDW = Concrete Driveway
CI = Curb Inlet
℄ = Center Line
CH = Chord Length
CLF = Chain Link Fence
CLS = Centerline Swale
CM = Concrete Monument
CMP = Corrugated Metal Pipe
CO = Clean out
CON = Concrete
COR = Corner
CPB = Condo Plat Book
C/S = Concrete Slab
CTS = Control Structure
(D) = Deed
DB = Deed Book
DCVA = Double Check Valve Assembly
DEPT = Department
DIA = Diameter
DIP = Ductile Iron Pipe
DMH = Drainage Manhole
DS = Down Spout
DW = Driveway
E = East
ECMP = Elliptical Corrugated Metal Pipe
EL = Elevation
EOW = Edge of Water
EP = Edge of Pavement
ERCP = Elliptical Reinforced Concrete Pipe
ESMT = Easement
(F) = Field Data
FCM = Found Concrete Monument
FDOT = Florida Department of Transportation
FH = Fire Hydrant
FIP = Found Iron Pipe
FIR = Found Iron Rod
FL = Flow Line
FND = Found
FN&D = Found Nail and Disk
FFE = Finished Floor Elevation
FN&TT = Found Nail and Tin Tab
FOP = Found Open End Iron Pipe
FPB = Florida Power Corporation Box
FPC = Florida Power Corporation
FPP = Found Pinched Iron Pipe
FRRS = Found Railroad Spike
FT = Feet
F/T = Fence Tie
FXC = Found X–cut
GI = Grate Inlet
GPS = Global Positioning System
GT = Gopher Tortoise Hole
GV = Gas Valve
HC = Handicapped
IC = Illegible cap
ID = Identification
IE = Invert Elevation
INV = Invert
JD = Jurisdictional
(L) = Legal Description
LB = Licensed Business Number
LF = Linear Feet
LP = Light Pole
LS = Licensed Surveyor
MAS = Masonry
MES = Mitered End Section
MH = Manhole
MHW = Mean High Water
MOL = More or Less
N = North
N/C = No Cap
N/F = Not Found
NAD = North American Datum
NAVD = North American Vertical Datum
NGS = National Geodetic Survey
NGVD = National Geodetic Vertical Datum
NP = Normal Pool Elevation
(NR) = Non Radial
O/A = Overall
OHW = Overhead Wire(s)
ORB = Official Record Book
OSW = Other Surface Water
(P) = Plat Book XX Page XX
PB = Plat Book
PC = Point of Curvature
PCP = Permanent Control Point
PG(S) = Pages
PI = Point of Intersection
PL = Property Line
PLS = Professional Land Surveyor
POB = Point of Beginning
POC = Point of Commencement
POL = Point on Line
PRM = Permanent Reference Monument
PSM = Professional Surveyor and Mapper
PT = Point of Tangency
PVC = Polyvinyl Chloride Pipe
PWL = Painted White Line
PYL = Painted Yellow Line
(R) = Recorded Data
R = Radius
RCP = Reinforced Concrete Pipe
RD = Roof Drain
RNG = Range
R/W = Right of Way
S = South
SCM = Set Concrete Monument, 4"x4", "PRM LB 7345"
SEC = Section
SHW = Seasonal High Water Elevation
SIR = Set 5/8" Iron Rod and Cap, "AVID LB 7345"
SIR(W) = Set 5/8" Iron Rod and Cap, "WIT COR LB 7345"
SMH = Sanitary Manhole
SN&D = Set Nail and Disk, "AVID LB 7345"
SN&D(W) = Set Nail and Disk, "WIT COR LB 7345"
SQ = Square
SR = State Road
STY = Story
SW = Sidewalk
TBM = Temporary Benchmark
TOB = Top of Bank
TOS = Toe of Slope
TPS = Traffic Paint Stripe
TRANS = Transformer
TRV = Traverse
(TYP) = Typical
TWP = Township
U/P = Utility Pole
VCP = Vitrified Clay Pipe
W = West
W/ = With
WDF = Wood Fence
WIT = Witness
W/T = Wall Tie
WV = Water Valve

UPLAND AREA
152,934 SQ.FT OR
3.5109 acres +/–

WETLAND AREA
183,473 SQ.FT OR
4.2120 acres +/–

PARCEL 3 OVERALL AREA
336,407 SQ.FT OR
7.7228 ACRES +/–

THE REPORT IS NOT FULL AND COMPLETE WITHOUT THE ATTACHED SURVEY, SEE SHEET 2 OF 2.

PARCEL 3 REVISED

NO.	DATE	DESCRIPTION	BY

REVISIONS

SEC-TWP-RGE 8-27 S-16 E
DRAWN JLW
QC
FIELD BOOK/PAGE 204/51
PROJ. #: SPEC25101
DATE OF FIELD WORK: 06/18/25

SURVEY MAP AND REPORT OR THE COPIES THEREOF ARE NOT VALID WITHOUT THE SIGNATURE AND ORIGINAL RAISED SEAL OF A FLORIDA LICENSED SURVEYOR AND MAPPER FLORIDA CERTIFICATE OF AUTHORIZATION No. 7345

Digitally signed by JOHN L WABY
Date: 2025.08.08 09:14:10-04'00'

JOHN L. WABY, PLS LICENSE No.4270

PATRICK FANTASIA

AVID GROUP®
CIVIL ENGINEERING
LAND PLANNING
TRAFFIC/TRANSPORTATION
ENVIRONMENTAL SCIENCES
SURVEYING
GIS
2300 CURLEW ROAD
STE 201
PALM HARBOR, FLORIDA
34683
PHONE (727) 789-9500
FAX (727) 784-6662
AVIDGROUP.COM

475 N. HIGHLAND AVE
PINELLAS COUNTY, FLORIDA

BOUNDARY SURVEY
WETLAND JURISDICTIONAL SURVEY

SHEET NO. 1 of 2

PARCEL 2
WETLAND AREA SOUTH
161,904 SQ.FT OR
3.7168 ACRES

PARCEL 4

LOT 17
PB H-1, PAGE 116

LOT 6
PB H-1, PAGE 116

LOT 7
PB H-1, PAGE 116

LOT 8
PB H-1, PAGE 116

LOT 20
PB H-1, PAGE 116

PARCEL 3

LOT 8
PB H-1, PAGE 116

PARCEL 4

WETLAND LINE
PREVIOUSLY LOCATED

SIR LB 7345

CENTERLINE OF POLES (DO NOT EXIST)
DB 1086, PAGE 476
15' EAST OF WEST LINE LOT 7

EAST R/W
NORTH HIGHLAND AVENUE
RELOCATED (60' R/W)
RESOLUTION NO. 22-16
ORB 21949, PG 1827

N24°16'04"E (F)
106.55' (F)

N89°41'13"E (F)
31.09' (F) O/A

N89°41'13"E (F)
16.09' (F)

WEST LINE LOT 7

15' EAST 1/2 OF 30' R/W VACATED
RESOLUTION NO. 22-16
ORB 21949, PG 1827

FIR 5/8" LB 7345

N89°41'13"W (F)
15.00 (F)

SOUTH LINE LOT 7
NORTH LINE LOT 8

FIR NOID
SW CORNER LOT 7
NW CORNER LOT 8

NORTH LINE LOT 20

JD 1-14

7.37' (TIE)

POB PARCEL 3
INTERSECTION OF
WEST LINE NE 1/4 OF
SECTION 8, AND NORTH LINE OF
LOT 8 EXTENDED AND THE SOUTH
LINE OF LOT 7 EXTENDED

S75°09'28"E (F) 397.32' (F)

NORTH LINE PARCEL 3

NE CORNER PARCEL 3

CORNER NOT SET

EAST LINE LOT 20

JD 1-13

WETLAND LINE
DELINEATED BY NAYLOR
ENVIRONMENTAL SOLUTION

PARCEL B
EXCEPTION 13
ORB 6356, PAGE 2029

30' R/W VACATED
RESOLUTION NO. 22-16
ORB 21949, PG 1827

JD 1-12

CENTERLINE OF POLES (DO NOT EXIST)
DB 1086, PAGE 476
15' EAST OF WEST LINE LOT 8

COUNTY RD 232
66' R/W
EXCEPTION 13
ORB 6356, PAGE 2029

GATE 6'CLF

385.86' (F)

PARCEL A
EXCEPTION 13
ORB 6356, PAGE 2029

EAST R/W
WEST LINE LOT 8

EAST R/W
NORTH HIGHLAND AVENUE
RELOCATED (60' R/W)
RESOLUTION NO. 22-16
ORB 21949, PG 1827

PORTION
LOT 20

POC PARCEL 3, LOT 1 & 2
S.W. CORNER
NW 1/4 OF THE
NE 1/4 OF
SECTION 8,
TOWNSHIP 27 S
RANGE 16 E
FIR 5/8" LB 7345
FIR 1/2" NO ID
0.56' S
HELD FOR LINE

JD 1-11

S01°21'26"E (F) 333.17'
WEST LINE NE 1/4 SECTION 8

N13°08'23"E
111.05' (F)

N20°23'12"E
98.15' (F)

79.41' WIDE
FLORIDA POWER EASEMENT
EXCEPTION 18
ORB 1086, PAGE 487

SW CORNER LOT 8
CORNER NOT SET

JD 1-10

SOUTH LINE NE 1/4 OF NW 1/4
NORTH LINE SE 1/4 OF NW 1/4

NORTH HIGHLAND AVENUE
RELOCATED (60' R/W)
RESOLUTION NO. 22-16
ORB 21949, PG 1827

FIR 5/8" LB 7345

N12°18'56"E (F)2
51.90' (F)

FIR 5/8" LB 7345

TANK

N23°08'08"W (F)
48.22' (F)

SE CORNER
LOT 20
CORNER NOT SET

JD 1-9

N56°24'14"W (F)
49.18' (F)

JD 1-8

PORTION
TRACT A

LOT 2 (TOTAL)
286,465 SQ.FT OR
6.5763 ACRES +/-

LOT 2 (UPLAND)
95,591 SQ.FT OR
2.1944 ACRES +/-

LOT 2 (WETLAND)
190,874 SQ.FT OR
4.3819 ACRES +/-

S01°21'26"E (F) 268.28' (F) O/A
WEST LINE NE 1/4 SECTION 8

N47°11'40"W (F)
62.86' (F)

JD 1-7

N42°50'14"W (F)
68.87' (F)

WETLAND LINE
DELINEATED BY NAYLOR
ENVIRONMENTAL SOLUTION

100' WIDE FLORIDA POWER
EASEMENT
DB 1441, PAGE 388

JD 1-6

S00°00'02"E (F)
504.79' (F)

PARCEL 4

N89°14'12"W (F)
227.51' (F)
S89°14'12"E (F)

SIR 5\8" LB 7345

POB
LOT 1 & 2

LOT 1
49,942 SQ.FT OR
1.1465 ACRES +/-

N18°49'51"W (F)
45.63' (F)

JD 1-5

67.27' (F)
N70°49'26"W (F)

S83°30'35"W (F)
67.33' (F)

PERPETUAL GRADING EASEMENT
EXCEPTION 10
ORB 16857, PAGE 286

TRANSMISSION
TOWER

TRANSMISSION
TOWER

N14°54'52"E (F)
56.25 (F)

FIR 5\8" LB 7345

GATE

6' CLF

N28°52'34"E (F)
59.61' (F)

FIR 5\8" LB 7345

N28°57'55"E (F)
92.29' (F)

N89°54'24"W (F)
319.82' (F)

6' CLF

FIR 5\8" LB 7345

FIR 1/2" NO ID

WESTERLY R/W CR 272
ORB 18575, PAGE 2453

NORTH LINE
ORB 19603, PAGE 265

EASTERLY R/W CR 272
ORB 19603, PAGE 265 (D3)

EASTERLY R/W TAMPA & GULF COAST R.R.
PB 23, PAGE 29

100' R/W TAMPA & GULF COAST R.R.
PB 23, PAGE 29

PORTION TRACT A (D)

S01°21'26"E (F)
184.82' (F)

N01°21'26"W (F)
85.68' (F)

FCM 4"X4" ILL

N89°49'07"W (F)
159.69' (F)

JD 1-4

JD 1-3
MISSING

N83°38'31"W (F)

JD 1-2

27.62' (TIE)
57.10' (F)

S85°39'04"W (F)
81.83' (F)

JD 1-1

FIR WIT 5/8"LB 7345

20.14' (F)

FIR 1/2" NO ID

N89°45'06"W (F)
126.87' (F)

FIR 5/8"LB 7345

FIR 1/2" LB 416?

6'CLF

5'CLF

FIR 1/2" NO ID

N82°20'15"W (F)
81.24' (F)

FIR 1/2"
CAP ILL

FIR 1/2"
CAP ILL

N83°46'31"E (F)
77.24' (F) O/A

N89°51'16"W (F)
87.85' (F)

S01°21'26"E (F)
99.73 (F)

SIR LB 7345

1325.93' (F) O/A

PORTION

DAVIS REPLAT OF LAKE BUTLER ESTATES

0 25 50 100

SCALE: 1" = 50'
GRAPHIC SCALE IN FEET

NO.	DATE	DESCRIPTION	BY

REVISIONS

SEC-TWP-RGE 8-27 S-16 E
QC
DRAWN JLW
FIELD BOOK/PAGE 208/69
PROJ.# SPE025101
DATE OF FIELD WORK 06/18/25

SURVEY MAP AND REPORT OR THE COPIES THEREOF ARE NOT VALID WITHOUT THE SIGNATURE AND ORIGINAL RAISED SEAL OF A FLORIDA LICENSED SURVEYOR AND MAPPER. FLORIDA CERTIFICATE OF AUTHORIZATION No. 7345

SEE SHEET 1 OF 2 FOR
SURVEYOR'S SIGNATURE AND SEAL

JOHN L. WABY, PLS LICENSE No.4270

PATRICK FANTASIA

CIVIL ENGINEERING
LAND PLANNING
TRAFFIC/TRANSPORTATION
ENVIRONMENTAL SCIENCES
SURVEYING
GIS

4904 EISENHOWER BLVD.
STE. 250
TAMPA, FLORIDA 33634
PHONE (727) 789-9500
AVIDGROUP.COM

AVID GROUP®

PARCEL 3 LOT SPLIT

475 N. HIGHLAND AVE
PINELLAS COUNTY, FLORIDA

BOUNDARY SURVEY
WETLAND JURISDICTIONAL SURVEY

SHEET NO

2 of 2

THE SURVEY IS NOT FULL AND COMPLETE WITHOUT THE ATTACHED SURVEY REPORT, SEE SHEET 1.

City of Tarpon Springs

TRC Comment Report

324 E. Pine Street, Tarpon Springs, FL, 34689 Telephone: 727-942-5617

Project	**25.79** PNZ - 475 N Highland Ave Rezoning
Project Address	475 N Highland Ave United States
Files and Attachments	survey_boundary and wetland.pdf Design Development

Instructions

Please review comments below and provide any additional required information. Your project will not be scheduled for Planning and Zoning Board, Board of Adjustment, or Board of Commissioners review until all required information or revised plans are provided. If no additional information is required, you will be informed of when the project will be scheduled for public hearing by Planning and Zoning staff. Please keep in mind that the Planning & Zoning Department has 90-day suspension period from the date of the TRC review for the submittal of revisions/additional information. If revised plans/additional information are not submitted within the above referenced time frame, the application will be considered to be “EXPIRED” and a new application will have to be submitted. If you have questions concerning any of the above information, please do not hesitate to contact the Planning and Zoning Department for assistance.

Fema

[Sheet 0F21 | Comment 00004 | survey_boundary and wetland.pdf]

Megan Araya

Flood Zone will need to be updated. Maps updated on 8/24/21. Flood Zone is: AE-8.

Planning and Zoning

[Comment 00001]

Patricia McNeese

This document contains comments resulting from the October 2, 2025 meeting of the Technical Review Committee.

[Comment 00002]

Patricia McNeese

The property is currently located in the Residential Very Low (RVL) and Preservation (P) Future Land Use Map (FLUM) categories and in two zoning districts: Agricultural (A) and Residential Planned Development (RPD). The RPD zoning represents a previously approved planned development that was never constructed and is now expired. The proposal to rezone the property entirely to Agricultural (A) is appropriate and consistent with the RVL and P FLUM designations.

[Comment 00003]

Patricia McNeese

This application will be scheduled for the Monday, November 17, 2025 meeting of the Planning and Zoning Board and, tentatively, for the December 9 and December 16, 2025 meetings of the Board of Commissioners.

61829

Tampa Bay Times

Published Daily

STATE OF FLORIDA} ss
COUNTY OF HERNANDO, CITRUS, PASCO,
PINELLAS, HILLSBOROUGH County

Before the undersigned authority personally appeared Jill Harrison who on oath says that he/she is a Legal Advertising Representative of the Tampa Bay Times a daily newspaper printed in St. Petersburg, in Hernando, Citrus, Pasco, Pinellas, Hillsborough County, Florida that the attached copy of advertisement being a Legal Notice in the matter APP #25-79 was published in said newspaper by print in the issues of 10/29/25 or by publication on the newspaper's website, if authorized.

Affiant further says that the website or newspaper complies with all legal requirements for publication in chapter 50, Florida Statutes. Affiant further says the said Tampa Bay Times is a newspaper published in Hernando, Citrus, Pasco, Pinellas, Hillsborough County, Florida and that the said newspaper has heretofore been continuously published in said Hernando, Citrus, Pasco, Pinellas, Hillsborough County, Florida each day and has been entered as a second class mail matter at the post office in said Hernando, Citrus, Pasco, Pinellas, Hillsborough County, Florida for a period of one year next preceding the first publication of the attached copy of advertisement, and affiant further says that he/she neither paid nor promised any person, firm or corporation any discount, rebate, commission or refund for the purpose of securing this advertisement for publication in the said newspaper.

Signature of Affiant _____
Sworn to and subscribed before me this **10/29/2025**

Signature of Notary of Public
Personally known **X** or produced identification.
Type of identification produced _____

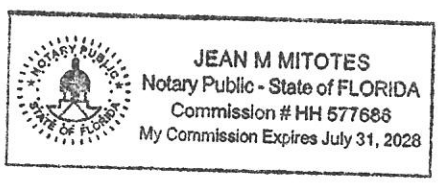

NOTICE OF PROPOSED CITY OF TARPON SPRINGS ZONING ATLAS AMENDMENT

The City of Tarpon Springs, Florida, proposes to adopt the following Ordinance:

ORDINANCE 2025-18

AN ORDINANCE OF THE CITY OF TARPON SPRINGS, FLORIDA, AMENDING THE OFFICIAL ZONING ATLAS FOR 7.72 ACRES, MORE OR LESS, OF REAL PROPERTY LOCATED AT 475 N HIGHLAND AVE, ON THE EAST SIDE OF N HIGHLAND AVE, APPROXIMATELY 500 FEET NORTH OF THE INTERSECTION OF N HIGHLAND AVE AND KEYSTONE ROAD (APPLICATION 25-79), FROM AGRICULTURAL DISTRICT (A) AND RESIDENTIAL PLANNED DEVELOPMENT DISTRICT (RPD) TO AGRICULTURAL DISTRICT (A); PROVIDING FOR FINDINGS; AND PROVIDING AN EFFECTIVE DATE.

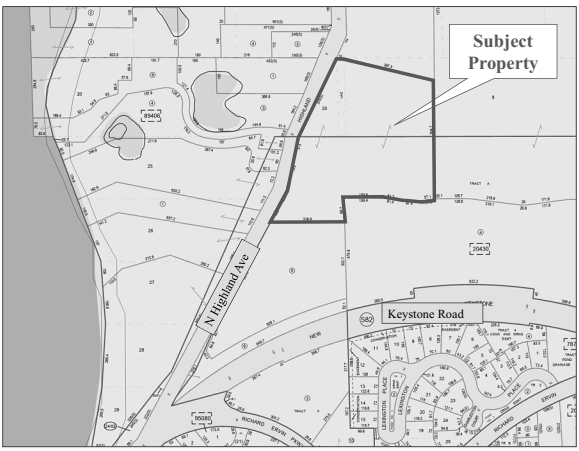

Public Hearings on the proposed ordinances will be held before the **Planning and Zoning Board** on:

Monday, November 17, 2025 at 6:30 P.M.

and the **Board of Commissioners** on the following dates:

Tuesday, December 9, 2025 at 6:30 P.M. (1st Reading)

Tuesday December 16, 2025 at 6:30 P.M. (2nd Reading)

ALL PUBLIC HEARINGS WILL BE HELD IN THE CITY HALL AUDITORIUM, 324 EAST PINE STREET, TARPON SPRINGS, FLORIDA.

Said hearings may be continued from time to time, pending Adjournment. All interested parties are invited to attend these meetings to express your views or to present facts in the case. If a person decides to appeal any decision made by the Board of Commissioners with respect to any matter considered at these meetings or hearings, he will need a record of the proceedings, and that, for such purposes, he may need to ensure that a verbatim record of the proceedings is made, which record includes the testimony and evidence upon which the appeal is to be based.

Written comments may be addressed to the Planning & Zoning Department, (Phone (727) 942-5611), City of Tarpon Springs, P.O. Box 5004, Tarpon Springs, Florida 34688-5004. Written comments will become a part of the record. Materials related to this ordinance, including the complete legal description of the subject property by metes and bounds, are available for inspection. Persons wishing to participate in the hearing or receive more information may contact the Planning & Zoning Department during City Hall business hours at (727) 942-5611, or visit the City's website at www.ctsfl.us. Any person with a disability requiring reasonable accommodation in order to participate in these meetings should call (727) 942-5611 or FAX a written request to (727) 943-4651.

PLEASE REFERENCE APPLICATION #25-79

10/29/2025

61829-1

66973

Tampa Bay Times

Published Daily

STATE OF FLORIDA} ss
COUNTY OF HERNANDO, CITRUS, PASCO, PINELLAS, HILLSBOROUGH County

Before the undersigned authority personally appeared Jes Bowling who on oath says that he/she is a Legal Advertising Representative of the Tampa Bay Times a daily newspaper printed in St. Petersburg, in Hernando, Citrus, Pasco, Pinellas, Hillsborough County, Florida that the attached copy of advertisement being a Legal Notice in the matter APPLICATION #25-79 was published in said newspaper by print in the issues of 12/03/25 or by publication on the newspaper's website, if authorized.

Affiant further says that the website or newspaper complies with all legal requirements for publication in chapter 50, Florida Statutes. Affiant further says the said Tampa Bay Times is a newspaper published in Hernando, Citrus, Pasco, Pinellas, Hillsborough County, Florida and that the said newspaper has heretofore been continuously published in said Hernando, Citrus, Pasco, Pinellas, Hillsborough County, Florida each day and has been entered as a second class mail matter at the post office in said Hernando, Citrus, Pasco, Pinellas, Hillsborough County, Florida for a period of one year next preceding the first publication of the attached copy of advertisement, and affiant further says that he/she neither paid nor promised any person, firm or corporation any discount, rebate, commission or refund for the purpose of securing this advertisement for publication in the said newspaper.

Signature of Affiant Jessica Bowling
Sworn to and subscribed before me this **12/03/2025**

Signature of Notary of Public
Personally known **X** or produced identification.
Type of identification produced _____

DEIRDRE A. BONETT
Notary Public - State of FLORIDA
Commission # HH601171
My Commission Expires Jan. 04, 2029

LEGAL NOTICE

NOTICE OF PROPOSED CITY OF TARPON ZONING ATLAS AMENDMENT

The City of Tarpon Springs, Florida, proposes to adopt the following Ordinances:

ORDINANCE 2025-18

AN ORDINANCE OF THE CITY OF TARPON SPRINGS, FLORIDA, AMENDING THE OFFICIAL ZONING ATLAS FOR 7.72 ACRES, MORE OR LESS, OF REAL PROPERTY LOCATED AT 475 N HIGHLAND AVE, ON THE EAST SIDE OF N HIGHLAND AVE, APPROXIMATELY 500 FEET NORTH OF THE INTERSECTION OF N HIGHLAND AVE AND KEYSTONE ROAD (APPLICATION 25-79), FROM AGRICULTURAL DISTRICT (A) AND RESIDENTIAL PLANNED DEVELOPMENT DISTRICT (RPD) TO AGRICULTURAL DISTRICT (A); PROVIDING FOR FINDINGS; AND PROVIDING AN EFFECTIVE DATE.

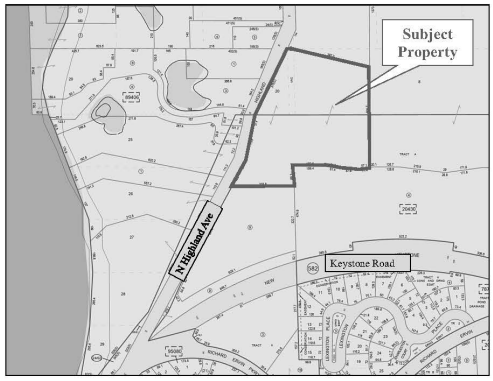

Public Hearings on the proposed ordinance will be held before the **Board of Commissioners** on the following dates:

Tuesday, December 9, 2025 at 6:30 P.M. (1st Reading)
Tuesday December 16, 2025 at 6:30 P.M. (2nd Reading)

ALL PUBLIC HEARINGS WILL BE HELD IN THE CITY HALL AUDITORIUM, 324 EAST PINE STREET, TARPON SPRINGS, FLORIDA.

Said hearings may be continued from time to time pending Adjournment. All interested parties are invited to attend these meetings to express your views or to present facts in the case. If a person decides to appeal any decision made by the Board of Commissioners with respect to any matter considered at these meetings or hearings, he will need a record of the proceedings, and that, for such purposes, he may need to ensure that a verbatim record of the proceedings is made, which record includes the testimony and evidence upon which the appeal is to be based.

Written comments may be addressed to the Planning & Zoning Department, (Phone (727) 942-5611), City of Tarpon Springs, P.O. Box 5004, Tarpon Springs, Florida 34688-5004. Written comments will become a part of the record. Materials related to this ordinance, including the complete legal description of the subject property by metes and bounds, are available for inspection. Persons wishing to participate in the hearing or receive more information may contact the Planning & Zoning Department during City Hall business hours at (727) 942-5611, or visit the City's web site at www.ctsfl.us. Any person with a disability requiring reasonable accommodation in order to participate in these meetings should call (727) 942-5611 or FAX a written request to (727) 943-4651.

PLEASE REFERENCE APPLICATION #25-79

12/03/2025 jb

66973-1

City of Tarpon Springs
Planning & Zoning Department
324 East Pine Street
Tarpon Springs, FL 34689

NOTICE OF UPCOMING PUBLIC HEARING REGARDING PROPOSED ZONING MAP AMENDMENT
APPLICATION #25-79

Please review the information on the **reverse side** of this card carefully!! If you have any questions regarding this matter, please call our office at (727) 942-5611
or email us at planning@ctsfl.us.

«AddressBlock»

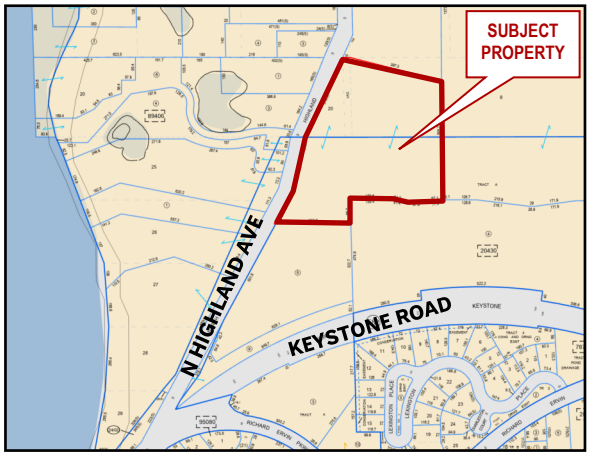

Application Description: An ordinance of the City of Tarpon Springs, Florida, to amend the official zoning atlas for 7.7 acres, more or less, of real property located at 475 North Highland Avenue, on the east side of N. Highland Ave. approximately 700 feet north of the intersection of N. Highland Ave and Keystone Road, from Agricultural (A) and Residential Planned Development (RPD) to Agricultural(A).

(Please Reference Application #25-79)

Please be advised that the Planning and Zoning Board will hold one Public Hearing on **Monday, November 17, 2025** at **6:30 p.m.** and the Board of Commissioners will hold two public hearings on **Tuesday, December 9, 2025** at **6:30 p.m.** and on **Tuesday, December 16, 2025** at **6:30 p.m.** All public hearings are held in the **City Hall Auditorium which is located at 324 East Pine Street, Tarpon Springs, FL 34689.** All interested parties are invited to attend this meeting to express their views or to present facts in the case. Written correspondence may be directed to the City of Tarpon Springs, Planning and Zoning Department, 324 East Pine Street, Tarpon Springs, FL 34688, or you may email your concerns to planning@ctsfl.us. Materials related to this application may be obtained by contacting the Planning & Zoning Department during City Hall business hours. The meeting packet and meeting instructions will be posted approximately one week prior to the meeting on the City's web site at www.ctsfl.us. Any person with a disability or without access to a computer or phone requiring reasonable accommodation in order to participate in these meetings should call (727) 942-5611 or email a written request to planning@ctsfl.us.

RESOLUTION NO. 2025-66

A RESOLUTION OF THE BOARD OF COMMISSIONERS OF THE CITY OF TARPON SPRINGS, FLORIDA, CALLING FOR THE MUNICIPAL GENERAL ELECTION TO BE HELD ON MARCH 10, 2026 FOR THE PURPOSE OF ELECTING ONE COMMISSIONER FOR SEAT #1 AND ELECTING ONE COMMISSIONER FOR SEAT #2 TO SERVE A TERM OF THREE YEARS EACH; PROVIDING FOR ESTABLISHMENT OF THE BALLOT TITLE FOR SAID ELECTION; PROVIDING FOR NOTICE TO THE SUPERVISOR OF ELECTIONS; AND PROVIDING FOR THE EFFECTIVE DATE HEREOF.

WHEREAS, the Municipal General Election of the City of Tarpon Springs, Florida is required by law to be held on March 10, 2026, at which time it is necessary to elect two Commissioners to serve a term of three years each for Seat # 1 and Seat # 2; and

WHEREAS, there have been filed with the City Clerk, within the time prescribed by law, petitions asking that the following people be placed on the official ballot in said election, to be voted on as a candidates for the office of Commissioner:

Commissioner Seat #1	**Commissioner Seat #2**
David Banther	Va Celia Koumendouros
	Craig Lunt
	Lori Weaver

WHEREAS, said petitions have been examined by the City Clerk, who has reported that the petitions are in proper form, contain the required number of qualified signatures, and that said candidates are qualified to hold office according to the charter and the ordinances of the City, and the laws of the State of Florida; and

NOW, THEREFORE, BE IT RESOLVED BY THE BOARD OF COMMISSIONERS OF THE CITY OF TARPON SPRINGS, FLORIDA:

Section 1. A Municipal General Election is hereby called to be held on March 10, 2026, for the purpose of electing two Commissioners to serve a term of three years each for Seat # 1 and Seat # 2.

Section 2. No other candidate having qualified for the office of Commissioner Seat # 1, other than David Banther; therefore, David Banther is hereby declared elected for a term of three years, commencing April 14, 2026, under Section 101.252, Florida Statutes.

Section 3. The names of Va Celia Koumendouros, Craig Lunt, and Lori Weaver

are hereby placed on the official ballot in said election as candidates for the office of Commissioner, Seat #2 of the City.

Section 4. The polls shall open at the time established. As provided in Chapter 2 of the Code, the polling places shall be established by contract between the City Clerk and the Supervisor of Elections of Pinellas County.

Section 7. The Mayor and the City Clerk are hereby authorized to execute the standard agreement with the Pinellas County Supervisor of Elections for the procurement of the necessary ballots and equipment for said election, which contract shall include the testing, equipment, ballots, poll workers, polling places, procurement of absentee ballots and processing thereof, and the tabulation of the ballots at the election.

Section 8. This Resolution shall become effective immediately upon final passage and adoption.

CITY OF TARPON SPRINGS, FL

CITY MANAGER

324 East Pine Street
P.O. Box 5004
Tarpon Springs, Florida 34688-5004
(727) 942-3590
Fax (727) 937-8199

MEMORANDUM

To: Mayor and Commissioners

From: Charles Rudd, City Manager

Date: 12/4/25

Subject: Marine Commerce Committee

This resolution is to re-establish the Marine Commerce Committee. The Commission will then appoint members to the Committee on December 16th regular Commission Meeting.

Also, for consideration, the section titled, “Duties of the Marine Commerce Committee” only spells out issues of access, safety and the environment. I believe the intention of the Commission may have been to also consider economic development issues related to our working waterfront (i.e. sponging, fishing and boating industries). The Commission may want to add something related to this aspect of Marine Commerce such as:

Recommending economic incentives for marine-related industry retention and recruitment.

Facilitating communication with marine-related industry leaders and city leadership to strengthen the working waterfront.

RESOLUTION NO. 2025-68

A RESOLUTION OF THE BOARD OF COMMISSIONERS OF THE CITY OF TARPON SPRINGS, FLORIDA, RE-ESTABLISHING THE MARINE COMMERCE COMMITTEE; PROVIDING FOR MEMBERSHIP; PROVIDING FOR TERMS OF OFFICE; PROVIDING FOR DUTIES; PROVIDING FOR RULES OF PROCEDURE; PROVIDING FOR REPORTING RESPONSIBILITY; AND PROVIDING FOR AN EFFECTIVE DATE.

WHEREAS, Section 8 of the City Charter authorizes the Board of Commissioners to appoint various boards and committees; and

WHEREAS, the Board of Commissioners at its regular meeting of Sept. 9, 2025, discussed re-establishing the Marine Commerce Committee that was established in 2016 with a goal of soliciting recommendations regarding the dredging of the Anclote River Federal Channel; and

WHEREAS, the Marine Commerce Committee ceased meeting in 2017 upon reaching its goals; and

WHEREAS, the City Charter Article II Section 8 (q) outlines responsibilities to improve and maintain the navigation of the Anclote River and city bayous; and

WHEREAS, The Tarpon Springs Code of Ordinances Chapter 5 outlines general authority over waterways; and

WHEREAS, the Board of Commissioners desires to re-establish a committee to ensure the working waterfront and waterways are protected and maintained as outlined in the City Charter and Code of Ordinances;

NOW, THEREFORE, be it resolved by the City Commission of the City of Tarpon Springs, Florida, that:

Section 1: Created: There is hereby re-established a Marine Commerce Committee.

Section 2: Number of members: composition: The Board of Commissioners shall initially appoint five (5) regular members and two (2) alternate members of the Marine Commerce Committee.

Section 3: Appointment and terms of members:

a) The Board of Commissioners shall designate one regular member and one alternate member to serve a one-year term, two regular members and one alternate member to serve a two-year term, and two regular members to serve a three-year term. Committee members shall serve without compensation.

b) Following the initial appointment of members of the Committee, the Board of Commissioners shall annually appoint people to fill the positions of members whose terms have expired. Members of the Committee appointed shall serve three-year terms.

c) Members of the Marine Commerce Committee serve at the pleasure of the Board of Commissioners and may be removed from the Committee by the Board of Commissioners for any reason.

d) If the position of a member becomes vacant for any reason, the Board of Commissioners shall appoint another person to serve the unexpired term of vacated position.

e) No member shall serve more than a total of six (6) years.

Section 4: Qualifications for members:

a. Whenever possible the Board of Commissioners shall appoint members to the Marine Commerce Committee who are knowledgeable in waterways and have demonstrated expertise, training, education, interest, or experience in fields related to local marine fishery, maritime industry, and environmental health and safety.

b. Members must meet the eligibility requirements of Section 8 of the City Charter, including being a resident of the City and adhering to Sunshine Laws which prohibit communication between members outside of publicly advertised committee meetings.

c. City employees, elected City officials, members of other City Advisory Boards or Committees and appointed City officers may not serve as members of the Marine Commerce Committee, as provided by the City Charter.

Section 5: Duties of the Marine Commerce Committee: The Marine Commerce Committee will follow the City Charter and Code of Ordinances provisions and provide recommendations for waterway issues including, but not limited, to:

1. Maintaining and dredging of the Anclote River Federal Channel, turning basin, outer cuts, or any portion thereof,
2. Maintaining a safe navigational depth of the Anclote River and its estuaries and city bayous for commercial fishing operations and recreational boating access,
3. Ensuring a bathymetric survey is done at least every five years, and a navigational chart of the local channels is maintained,
4. Recommending marine safety measures, including idle, no-wake or slow speed zones, and
5. Recommending environmental resource protection measures.

Section 6: Duties of the City Manager: It is the desire of the Board of Commissioners that the Marine Commerce Committee be empowered and enabled to provide meaningful and practical advice and recommendations regarding waterway matters.

a) The City Manager or his/her designate is directed to provide such information, guidance, and assistance to the Marine Commerce Committee as is necessary for the Committee to accomplish its duties in accordance with Board of Commissioners' direction.

b) The City Manager or his/her designate shall act as liaison between the Board of Commissioners and the Committee.

Section 7: Election of officers; meetings:

a. The Marine Commerce Committee shall annually select a chairperson and a vice-chairperson.

b. The Committee shall meet quarterly and at such times and such places as requested by the City Manager or his or her designate, after consultation with the Committee, as may be necessary to accomplish the Committee's duties.

c. Alternate members of the Committee, by order of seniority of appointment, shall sit in place of absent regular members of the Committee at meetings of the Committee.

d. Alternate members of the Committee, unless they are sitting in place of an absent member, shall not vote on any matter, but may speak on any matter before the Committee.

e. A quorum for the conduct of business shall be not less than three (3) regular and alternate members of the Committee

f. A majority of the voting members of the Committee present at a meeting shall be necessary to make any determination required by the Committee.

g. Meetings of the Committee shall be open to the public, and minutes shall be kept. A public record of the Committee's minutes and resolutions shall be maintained and made available for inspection by the public.

Section 8. Robert's Rules of Order: Robert's Rules of Order, newly revised, shall generally be used for procedural rules in the absence of the adoption of alternative procedures.

Section 9: Effective Date: This resolution shall become effective upon passage and adoption.

ORDINANCE 2025-19

AN ORDINANCE OF THE CITY OF TARPON SPRINGS, FLORIDA, CREATING A HUMAN RESOURCES SECTION, SUBCHAPTER 'GENERAL PROVISIONS', BY INCLUDING PROVISIONS FOR A GENERAL BACKGROUND CHECK REQUIREMENT; AND A SPECIAL CRIMINAL HISTORY BACKGROUND CHECK; PROVIDING FOR THE REPEAL OF ORDINANCES OR PARTS OF ORDINANCES IN CONFLICT; PROVIDING FOR SEVERABILITY; AND PROVIDING FOR AN EFFECTIVE DATE.

WHEREAS, it is common practice and both appropriate and proper to require general background checks of all prospective City employees; and

WHEREAS, the City has conducted such general background checks for some time without any specific requirements being set forth in the Code of Ordinances; and

WHEREAS, it is necessary and appropriate to specify all job requirements so that prospective employees are fully advised before applying for employment with the City:

WHEREAS, Florida Legislature, Chapter 169 set forth in Section 166.0442, Florida Statutes, which authorizes specific criminal history checks for certain municipal employees and appointees, whether paid, unpaid, or contractual, the Florida Legislature has attempted to assist municipal governments in their efforts to ensure that city applicants, personnel, and other appointees to positions it deems critical to security or public safety have appropriate backgrounds to work in those positions; and

WHEREAS, the Board of Commissioners of the City of Tarpon Springs has determined it is in the best interest of the city and its citizens to require all appropriate and applicate background checks for all prospective City employees.

NOW THEREFORE BE IT ORDAINED BY THE BOARD OF COMMISSIONERS OF THE CITY OF TARPON SPRINGS, FLORIDA, AS FOLLOWS:

SECTION 1. The above recitals are true and correct and are hereby incorporated by reference.

SECTION 2. The City of Tarpon Springs Code of Ordinances creates a Human Resources section Subchapter 'General Provisions' by creating a section Recruitment and Examinations, which shall read as follows:

>> RECRUITMENT AND EXAMINATIONS.

(A) ***Recruitment.*** The Human Resources Director shall give public notice of recruitment for examinations which are to be held for filling positions in classified service. The notice shall contain the time, place, date and requirements for the

DRAFT

examinations. Applications for all positions of the classified service are to be submitted to the Human Resources Director on prescribed forms. All prospective employees shall be required to authorize the City to conduct all appropriate background screening procedures as a condition of employment with the City.

(B) ***Criminal History Records Check***. In addition to the foregoing, as authorized in F.S. § 166.0442, the City may, in its sole discretion, require employment screening for any position of municipal employment or appointment which the City determines is critical to security or public safety, or for any private contractor, employee of a private contractor, vendor, repair person, or delivery person who has access to any public facility or publicly operated facility that the City determines is critical to security or public safety. Each person applying for, or continuing employment in, any such position or having access to any such facility shall also be required to be fingerprinted. The fingerprints shall be submitted to the Department of Law Enforcement for a state criminal history record check and to the Federal Bureau of Investigation for a national criminal history record check. The information obtained from the criminal history record checks conducted pursuant to this Ordinance may be used by the municipality to determine an applicant's eligibility for employment or appointment and to determine an employee's eligibility for continued employment. This section is not intended to preempt or prevent any other background screening, including, but not limited to, criminal history background checks, that a municipality may lawfully undertake.

Section 3. All ordinances or parts of ordinances and conflict herewith are hereby repealed and all ordinances or parts of ordinances not in conflict herewith are hereby continued in full force and effect.

Section 4. It is the intention of the Board of Commissioners of the city of Tarpon Springs that the provisions of this ordinance shall be made a part of the City of Tarpon Springs Code of Ordinances, and the sections may be renumbered to accomplish such intention.

Section 5. If any portion, clause, phrase, sentence, or classification of this Ordinance is held or declared to be either unconstitutional, invalid, and applicable, inoperative or void, then such declaration shall not be construed to affect other portions of the ordinance; it is hereby declared to be expressed opinion of the Board of Commissioners of the City of Tarpon Springs that any such unconstitutional, Invalid, Inapplicable, inoperative or void portion or portions of this ordinance did not induce its passage, and that without the inclusion of any such portion or portions of this ordinance, the Board of Commissioners would have enacted the valid constitutional portions thereof.

Section 6. The provisions within this ordinance shall take effect immediately upon adoption.

DRAFT